BEFORE THE HON'BLE CENTRAL ELECTRICITY REGULATORY COMMISSION NEW DELHI

PETITION NO. /AT/2026

IN THE MATTER OF:

Petition under Section 63 readwith Section 79, including Section 79(1)(c) and (d) of Electricity Act, 2003 seeking adoption of Transmission Charges payable by Central Transmission Utility of India Ltd./ Respondent No. 1 for implementation of the "*Common Transmission System For Evacuation Of Power From Lakadia (Phase-II: 7.5 GW), Jam Khambhaliya (Phase-II: 5.5 GW) And Jamnagar (Phase-I: 1 GW): Part-B*" by the Petitioner.

AND IN THE MATTER OF:

Jam Khambhaliya Jamnagar Power Transmission Limited

…PETITIONER

VERSUS

Central Transmission Utility of India Ltd & Ors. …**RESPONDENTS**

INDEX

S. No.	Particulars	Page No.
1.	Index	**1-3**
2.	Memo of Parties	**4-18**
3.	Affidavit Verifying Petition	**19-20**
4.	Petition under Section 63 readwith Section 79, including Section 79(1)(c) and (d) of Electricity Act, 2003 seeking adoption of Transmission Charges payable by Central Transmission Utility of India Ltd./ Respondent No. 1 for implementation of the "*Common Transmission System For Evacuation Of Power From Lakadia (Phase-II: 7.5 GW), Jam Khambhaliya (Phase-II: 5.5 GW) And Jamnagar (Phase-I: 1 GW): Part-B*" by the Petitioner.	**21-38**

5.	**ANNEXURE P-1:** copy of the Notification dated 11.02.2026	**39-60**
6.	**ANNEXURE P-2(Colly):** A copy of the RFP dated 04.05.2026 along with amendments and letters dated 07.05.2026 issued to the Hon'ble Commission and Ministry of Power	**61-253**
7.	**ANNEXURE P-3(Colly):** A copy of the Certificate of Registration of the Applicant Company/ SPV and Board Resolution	**254-256**
8.	**ANNEXURE P-4(Colly):** A copy of the Memorandum of Association along with the Articles of Association of the Petitioner/ SPV	**257-300**
9.	**ANNEXURE P-5(Colly):** Copies of Advertisements inviting Bids from various entities	**301-306**
10.	**ANNEXURE P-6:** A copy of the letter dated 10.06.2026 issued by the MOP	**307-309**
11.	**ANNEXURE P-7(Colly):** Copies of the letters dated 23.06.2026	**310-318**
12.	**ANNEXURE P-8:** A copy of the undertaking dated 20.07.2026	**319-322**
13.	**ANNEXURE P-9:** The copy of the recommendation of CEA approval under Section 68(1) of EA 203 dated 08.09.2026	**323-326**
14.	**ANNEXURE P-10:** A copy of the letter dated 24.06.2026 issued by Ministry of Power	**327-332**
15.	**ANNEXURE P-11:** A copy of the survey report along with the route alignment issued by BPC/ RECPDCL	**333-439**
16.	**ANNEXURE P-12:**	**440**

	A copy of certificate of bid evaluation committee dated 31.08.2026	
17.	**ANNEXURE P-13:** A copy of the LOI dated 02.09.2026 issued to Ciegall India Ltd	**441-446**
18.	**ANNEXURE P-14:** A copy of the letter dated 07.09.2026 issued by Ciegall India Ltd	**447-453**
19.	**ANNEXURE P-15:** A copy of the letter dated 17.09.2026 issued by the MOP	**454-455**
20.	**ANNEXURE P-16:** Copy of the Contract Performance Guarantee dated 16.10.2026	**456-459**
21.	**ANNEXURE P-17:** A copy of Share Purchase Agreement dated 12.10.2026	**460-479**
22.	**ANNEXURE P-18:** A copy of the TSA dated 19.10.2026	**480-635**
23.	Board Resolution and Vakalatnama	**636-639**

THROUGH Hemant Singh

Digitally signed by Hemant Singh
Date: 2026.10.21 23:10:50 +05'30'

HEMANT SINGH/ NEHUL SHARMA/ LAVANYA PANWAR/ PRAGYA GUPTA

ADVOCATES FOR THE PETITIONER

CHARTER LAW CHAMBERS, ATTORNEYS-AT-LAW "CLC HOUSE" G-10, JUNGPURA EXTN. NEW DELHI – 110 014 PH: 011 – 4166617/18
Email: desk@charter.law

PLACE: NEW DELHI
DATED: 21.10.2026

BEFORE THE HON'BLE CENTRAL ELECTRICITY REGULATORY COMMISSION

NEW DELHI

IN THE MATTER OF: Petition under Section 63 readwith Section 79, including Section 79(1)(c) and (d) of Electricity Act, 2003 seeking adoption of Transmission Charges payable by Central Transmission Utility of India Ltd./ Respondent No. 1 for implementation of the "*Common Transmission System For Evacuation Of Power From Lakadia (Phase-II: 7.5 GW), Jam Khambhaliya (Phase-II: 5.5 GW) And Jamnagar (Phase-I: 1 GW): Part-B*" by the Petitioner.

AND IN THE MATTER OF:

Jam Khambhaliya Jamnagar
Power Transmission
Limited **…PETITIONER**

VERSUS

Central Transmission Utility of India
Ltd & Ors. …**RESPONDENTS**

MEMO OF PARTIES

IN THE MATTER OF:

Jam Khambhaliya Jamnagar Power Transmission Limited
Having Registered office at
Ceigall House, plot no 70,
Institutional Area, Sector 32,
Gurugram, Haryana 122001
(Through its Authorised Signatory) ...**PETITIONER**

VERSUS

1. **Central Transmission Utility of India**
   Through its Managing Director
   Floors No. 5th-10th,
   IRCON International Tower,

Tower 1, Plot No. 16, Institutional
Area, Sector 32, Gurugram,
Haryana 122003

2. **REC Power Development and Consultancy Limited**
Through its Authorised Representative
Core-4, SCOPE Complex,
7, Lodhi Road, New Delhi-110003

3. **NTPC Ltd.,**
Through its Authorised Representative
Engineering Office Complex, Plot-A-8A,
Sector-24, Noida, Uttar Pradesh - 201 301

4. **NTPC Renewable Energy Limited**, Through its Authorised Representative Engineering Office Complex, Plot-A-8A, Sector-24, Noida, Uttar Pradesh - 201 301

5. **Adani Green Energy Ltd.**
Through its Authorised Representative
5th Floor, Sambhav House,
Judges Bungalow Road, Bodakdev,
Ahmedabad -380015, Gujarat

6. **Nuclear Power Corporation of India Ltd.**
Through its Authorised Representative
9-S-30, V.S. Bhavan, Anushaktinagar,
Mumbai - 400 094

7. **KSK Mahanadi Power Company Ltd.,**
Through its Authorised Representative 8-2/293/82/A/431/A, Road No 22, Jubilee Hills, Hyderabad - 500 033

8. **Apraava Energy Pvt. Ltd.,**
Through its Authorised Representative 7th Floor, Fulcrum, Sahar Road, Andheri East, Mumbai 400009

9. **NHPC Limited,**
Through its Authorised Representative
NHPC Office Complex, RE Division,
Sector 33 Faridabad, Haryana - 121003

10. **Greenko AP01 IREP Pvt. Ltd.** Through its Authorised Representative 15th Floor, HT Media Building, KG Marg, New Delhi 110001

11. **Continuum Power Trading (TN) Pvt. Ltd.** Through its Authorised Representative 402 & 404, Delphi, C wing, Hiranandani Business park, Orchard Avenue, Powai, Mumbai 400 076

12. **ReNew Power Ltd.** Through its Authorised Representative Commercial Block-1, Zone 6, Golf Course Road, DLF City Phase-V Gurugram - 122009

13. **Adani Renewable Energy Holding Four Ltd.** Through its Authorised Representative 4th Floor, South Wing, Adani House, Shantigram, SG Highway, Ahmedabad - 382421

14. **Torrent Solar Power Pvt. Ltd.** Through its Authorised Representative Torrent Power Ltd., Akhakhol, Surat-394155

15. **ReNew Green (MHP One) Private Limited** Through its Authorised Representative Commercial Block -1, Golf Course Road, DLF City, Zone 6, Sector 43, Gurgaon 122009, Haryana, India

16. **Rewa Ultra Mega Solar Ltd.,** Through its Authorised Representative Urja Bhawan, Shivaji Nagar, Bhopal -462 016

17. **Renew Solar Power Pvt. Ltd.,** Through its Authorised Representative Renew Hub, Commercial Block-1, Zone-6, Golf Course Road, DLF City Phase-V, Gurugram, Haryana - 122009

18. **TEQ Green Power XI Private Limited**

Through its Authorised Representative 8th floor, DLF Sguare, DLF Phase 2, Sec 25, Gurugram, Haryana, India

19. **Gujarat Industries Power Company Ltd.,** Through its Authorised Representative Post Ranoli - 391 350, Vadodara, GUJARAT - 391350

20. **Sprng Vayu Vidyut Pvt. Ltd.,** Through its Authorised Representative Off A-001, Upper Ground, P-5, Pentagon Tower, Magarpatta City, Hadapsar, Pune - 411013

21. **Sprng Energy Pvt. Ltd.** Through its Authorised Representative Off A-001, Upper Ground, P-5, Pentagon Tower, Magarpatta City, Hadapsar, Pune - 411013

22. **Veh Wind Energy Private Limited** Through its Authorised Representative Plot No.38, Phase-2, 1st Floor, N-Heights, Hitech City, Siddig Nagar, Hyderabad-500081

23. **Viento Renewables Private Limited,** Through its Authorised Representative 508, Town Center II, Andheri Kurla Road Marol, Andheri East, Maharashtra

24. **Anupavan Renewables Private Limited,** Through its Authorised Representative 508, Town Center II, Andheri Kurla Marol, Andheri East, Maharashtra

25. **Tata Power Renewable Energy Limited** Through its Authorised Representative Corporate Center B, 34 Sant Tukaram Road, Carnac Bunder, Mumbai 400 009

26. **Serentica Renwables India Private Limited** Through its Authorised Representative

DLF Cyber Park, 9th Floor, Tower B
Sector 20, DLF Phase-3,
Gurugram-122008

27. **Sarjan Realities Pvt. Ltd.**
Through its Authorised Representative
5th floor, Godrej Millenium,9, Koregaon
Park, Vasani Nagar Park, Pune,
Maharashtra

28. **Avaada Energy Private Limited**
Through its Authorised Representative
C-11, Sector 65, Noida- 201307
Uttar Pradesh

29. **Juniper Green Energy Private Limited**
Through its Authorised Representative Plot
No. 18, First Floor, Institutional Area Sector
32, Gurugram, Haryana, India. 122001

30. **Powerica Limited**
Through its Authorised Representative
9th Floor, C-Wing, Godrej Colesium,
SionTrombay Road,
Sion, Mumbai- 400022

31. **Mounting Renewable Power Ltd.** Through
its Authorised Representative D/8, BKT
House, Trade World, Kamala City, Senapati
Marg, Lower Parel (West), Mumbai,
Maharashtra 400013

32. **NLC India Limited**
Through its Authorised Representative Office
of the General Manager Projects & Business
Development, Neyveli Township
Neyveli Cuddalore District, Tamil Nadu - 600010

33. **Oyster Green Hybrid One Private Limited**
Through its Authorised Representative
Unit no 203, Trade Centre, Opp MTNL,
Bandra Kurla Complex,
Bandra East, Mumbai 400051

34. **Ganeko One Energy Pvt. Ltd** Through its Authorised Representative First Floor, D-2 Southern Park Building, Saket, New Delhi- 110017

35. **Ganeko Two Energy Private Limited** Through its Authorised Representative First Floor, D-2 Southern Park Building, Saket, New Delhi- 110017

36. **Ganeko Solar Pvt. Ltd.** Through its Authorised Representative First Floor, D-2 Southern Park Building, Saket, New Delhi- 110017

37. **Acme Sun Power Pvt. Ltd.** Through its Authorised Representative Plot No. 152, Sector-44, Gurugram, Haryana 122002

38. **Acme Cleantech Solutions Private Limited** Through its Authorised Representative Plot No. 152, Sector-44, Gurugram, Haryana 122002

39. **Jindal Power Limited** Through its Authorised Representative Plot No.2, Tower-B, 3rd Floor, Sec-32, Gurgaon-122001

40. **Purvah Green Power Private Limited** Through its Authorised Representative 2a Lord Sinha Road First Floor Middleton Row Kolkata- 700071

41. **Bhojraj Renewables Energy Pvt. Ltd.** Through its Authorised Representative 6th Floor, MGF Corporate Park, Saket, New Delhi 110017

42. **ABREL (RJ) Projects Limited** Through its Authorised Representative 8th Floor Parsvnath Capital Towers Bhai

Vir Singh Marg New Delhi

43. **Aditya Birla Renewables Subsidiary Limited**
Through its Authorised Representative 8th
Floor Parsvnath Capital Towers Bhai Vir
Singh Marg New Delhi

44. **Tata Power Company Ltd.**
Through its Authorised Representative
Generating Station Khopoli,
P 0 Khopoli Power House,
Raigad, Maharashtra 410204

45. **Arcelormittal Nippon Steel India Ltd.**
Through its Authorised Representative
27km, Surat-Hazira Road, Hazira
Surat- 394270, Gujarat, India

46. **Dhariwal Infrastructure Ltd.** Through
its Authorised Representative C-6 Tadali
Growth Centre,
MIDC Tadali, Chandrapur,
Maharashtra, 442406

47. **Reliance Industries Ltd.**
Through its Authorised Representative
PO Motikhavadi, Meghpar Padana, Gagva,
Jamnagar-361140, Gujarat

48. **Hindalco Industries Ltd.,**
Through its Authorised Representative
Mahan Aluminium- NH75-
E Singrauli- Sidhi Road
Bargawan, M.P

49. **Welspun Living Limited**
Through its Authorised Representative
Survey No.650 & 652, Village Versamedi,
Taluka Anjar, District- Kutch-320110

50. **Welspun Corp Limited**
Through its Authorised Representative
Survey No.650 & 652, Village Versamedi,
Taluka Anjar, District- Kutch-320110

51. MPSEZ Utilities Limited
Through its Authorised Representative
3rd Floor, South Wing,
Adani Corporate House,
Shantigram, Nr. Vaishno Devi Circle, S G Highway, Khodiyar, Ahmedabad, Gujarat

52. Kutch Copper Ltd.
Through its Authorised Representative
3rd Floor, South Wing,
Adani Corporate House,
Shantigram, Nr. Vaishno Devi Circle, S G Highway, Khodiyar, Ahmedabad, Gujarat

53. Mundra Petrochem Ltd.
Through its Authorised Representative
Commerce House-4, Prahladnagar,
Beside Shell Petrol Pump, Ahmedabad,
Gujarat 380015

54. Hindustan Zinc Limited
Through its Authorised Representative
Yashad Bhawan, Near swaroop sagar,
Udaipur, Rajasthan - 313001

55. Khavda RE Transmission Limited,
Through its Authorised Representative
Power Grid Corporation of India Ltd.
Saudamini, Plot no.2, Sector-29,
Gurugram-122001

56. Khavda II-B Transmission Limited,
Through its Authorised Representative
Power Grid Corporation of India Ltd.
Saudamini, Plot no.2, Sector-29,
Gurugram-122001

57. Khavda II-C Transmission Limited,
Through its Authorised Representative
Power Grid Corporation of India Ltd.
Saudamini, Plot no.2, Sector-29,
Gurugram-122001

58. **KPS2 Transmission Limited,** Through its Authorised Representative Power Grid Corporation of India Ltd. Saudamini, Plot no.2, Sector-29, Gurugram-122001

59. **KPS3 Transmission Limited,** Through its Authorised Representative Power Grid Corporation of India Ltd. Saudamini, Plot no.2, Sector-29, Gurugram-122001

60. **Raipur Pool Dhamtari Transmission Ltd.,** Through its Authorised Representative Power Grid Corporation of India Ltd. Saudamini, Plot no.2, Sector-29, Gurugram-122001

61. **Dharamjaigarh Transmission Ltd.** Through its Authorised Representative Power Grid Corporation of India Ltd. Saudamini, Plot no.2, Sector-29, Gurugram-122001

62. **Vataman Transmission Limited.** Through its Authorised Representative Power Grid Corporation of India Ltd. Saudamini, Plot no.2, Sector-29, Gurugram-122001

63. **Khavda IV E2 Power Transmission Ltd.** Through its Authorised Representative Power Grid Corporation of India Ltd. Saudamini, Plot no.2, Sector-29, Gurugram-122001

64. **South Olpad Transmission Limited** Through its Authorised Representative Power Grid Corporation of India Ltd. Saudamini, Plot no.2, Sector-29, Gurugram-122001

65. **Jam Khambaliya Transmission Limited** Through its Authorised Representative Power Grid Corporation of India Ltd.

Saudamini, Plot no.2, Sector-29,
Gurugram-122001

66. Khavda PS1 and 3 Transmission Limited
Through its Authorised Representative Power Grid Corporation of India Ltd. Saudamini, Plot no.2, Sector-29,
Gurugram-122001

67. Khavda V-A Power Transmission Limited
Through its Authorised Representative
Power Grid Corporation of India Ltd.
Saudamini, Plot no.2, Sector-29,
Gurugram-122001

68. MEL Power Transmission Limited
Through its Authorised Representative
Power Grid Corporation of India Ltd.
Saudamini, Plot no.2, Sector-29,
Gurugram-122001

69. Banaskantha Transco Ltd.
Through its Authorised Representative
Power Grid Corporation of India Ltd.
Saudamini, Plot no.2, Sector-29,
Gurugram-122001

70. Khavda V-B1B2 Power Transmission Ltd.
Through its Authorised Representative
Power Grid Corporation of India Ltd.
Saudamini, Plot no.2, Sector-29,
Gurugram-122001

71. Bhopal Dhule Transmission Company Limited
Through its Authorised Representative
Unit No. 101, 1st Floor, Windsor Village,
Kolekalyan Off CST Road,
Vidhyanagari Marg, Santacruz (East),
Mumbai -400 098, Maharashtra.

72. Dhule Power Transmission Limited
Through its Authorised Representative
Unit No. 101, 1st Floor, Windsor Village,
Kolekalyan Off CST Road,

Vidhyanagari Marg, Santacruz (East),
Mumbai -400 098, Maharashtra.

73. Ishanagar Power Transmission Limited
Through its Authorised Representative
Unit No. 101, 1st Floor, Windsor Village,
Kolekalyan Off CST Road,
Vidhyanagari Marg, Santacruz (East),
Mumbai -400 098, Maharashtra.

74. Kallam Transco Limited
Through its Authorised Representative
Unit No. 101, 1st Floor, Windsor Village,
Kolekalyan Off CST Road,
Vidhyanagari Marg, Santacruz (East),
Mumbai -400 098, Maharashtra.

75. Mumbai Urja Marg Limited
Through its Authorised Representative
DLF Cyber Park, Tower-B, 9th Floor,
Udyog Vihar Phase-III, Sector-20,
Gurugram-122008

76. Goa-Tamnar Transmission Project Ltd.
Through its Authorised Representative
DLF Cyber Park, Tower-B, 9th Floor,
Udyog Vihar Phase-III, Sector-20,
Gurugram-122008

77. Khavda IV C Power Transmission Limited
Through its Authorised Representative
DLF Cyber Park, Tower-B, 9th Floor,
Udyog Vihar Phase-III, Sector-20,
Gurugram-122008

78. Khavda Bhuj Transmission Ltd.
Through its Authorised Representative
Adani Corporate House,
Shantigram, S.G. Highway, Ahmedabad,
Gujarat, India-382421

79. Khavda II-A Transmission Ltd.
Through its Authorised Representative
Adani Corporate House,
Shantigram, S.G. Highway,

Ahmedabad, Gujarat, India-382421

80. **WRSS XXI(A) Transco Ltd.** Through its Authorised Representative Adani Corporate House,
Shantigram, S.G. Highway, Ahmedabad,
Gujarat, India-382421

81. **Khavda IV A Power Transmission Limited**
Through its Authorised Representative
Adani Corporate House,
Shantigram, S.G. Highway, Ahmedabad,
Gujarat, India-382421

82. **Jamnagar Transmission Limited**
Through its Authorised Representative
Adani Corporate House,
Shantigram, S.G. Highway, Ahmedabad,
Gujarat, India-382421

83. **Navinal Transmission Limited** Through its Authorised Representative Adani Corporate House,
Shantigram, S.G. Highway, Ahmedabad,
Gujarat, India-382421

84. **Pune-III Transmission Limited**
Through its Authorised Representative
Adani Corporate House,
Shantigram, S.G. Highway, Ahmedabad,
Gujarat, India-382421

85. **WRNES Talegaon Power Transmission Ltd.**
Through its Authorised Representative
Adani Corporate House,
Shantigram, S.G. Highway, Ahmedabad,
Gujarat, India-382421

86. **Mundra I Transmission Ltd.** Through its Authorised Representative Adani Corporate House,
Shantigram, S.G. Highway, Ahmedabad,
Gujarat, India-382421

87. **KPS1 Transmission Limited** Through its Authorised Representative 2nd Floor, Niryat Bhawan, Rao Tularam Marg, Vasant Vihar, Opposite Army Hospital & Referral, New Delhi-110057

88. **Pachora Power Transmission Limited** Through its Authorised Representative 2nd Floor, Novus Tower, Plot No.-18, Sector-18, Gurugram-122015, Haryana.

89. **Solapur Transmission Ltd.** Through its Authorised Representative 'SAMANVAY', 600, Topovan, Ambawadi, Ahmedabad, Gujarat

90. **Karera Power Transmission Ltd.** Through its Authorised Representative 7th Floor, Fulcrum, Sahar Road, Andheri (East), Mumbai-99

91. **Raghanesda RE Transmission Ltd.** Through its Authorised Representative Incuspaze Building, 1st-3rd Floor, Plot No 17, Udyog Vihar Sector 18, Gurgaon, Haryana -122015

92. **Lakadia B Power Transmission Limited** Through its Authorised Representative 7th Floor, Building, 9A, Twin tower, Reliance Corporate Park, Thane-Belapur Road, Ghansoli, Navi Mumbai, Maharashtra-400701

93. **Powergrid Corporation of India Limited** Through its Secretary, Plot No.2, Near, IFFCO Chowk, Sector 29, Saudamini, Haryana 122001

94. **Chhattisgarh State Power Transmission Company Ltd.** Through its Authorised Representative CSPTCL, SLDC, Building, CSEB, Daganiya, CG, Raipur,

Chhattisgarh – 492013

95. Chhattisgarh State Power Distribution Company Ltd.
Through its Authorised Representative
Energy Information Technology Centre,
Shed-No. 8, CGPC Campus,
Danganiya, Raipur (CG) PIN - 492013

96. Maharashtra State Electricity Distribution Co. Ltd.,
Through its Authorised Representative 4th
Prakashgad, Plot No. G-9, Anant Kanekar
Marg Bandra (E), Mumbai–400051

97. Maharashtra State Electricity Transmission Co. Ltd.,
Through its Authorised Representative 4th
Floor, "Prakashganga:", Plot No.C-19, E-
block, Bandra-Kurla Complex,
Bandra (East), Mumbai-40005

98. Madhya Pradesh Power Transmission Company Ltd.,
Through its Authorised Representative
Nayagaon Rampur, Jabalpur,
Madhya Pradesh - 482008

99. Madhya Pradesh Paschim Kshetra Vidyut Vitaran Company Limited,
Through its Authorised Representative
GPH Compound, Polo Ground,
Indore - 452003

100. Gujarat Energy Transmission Corporation Limited
Through its Authorised Representative
Sardar Patel Vidhyut Bhavan,
Race Course, Getco,
Vadodara, Gujarat - 390007

101. Gujarat Urja Vikas Nigam Limited,
Through its General Manager
Sardar Patel Vidyut Bhavan
Race Course
Vadodara 390 007 Gujarat, India.

102. Northern Power Distribution Company of Telangana Limited
Through its Chief Engineer (IPC)
TGNPDCL, H.No: 2-5-31/2, Corporate Office,
Vidyut Bhavan, Nakkalagutta,
Hanamkon da, Warangal,
Telangana – 506 001 **…RESPONDENTS**

THROUGH

Hemant Singh Digitally signed by Hemant Singh Date: 2026.10.21 23:13:15 +05'30'

**HEMANT SINGH/ NEHUL SHARMA/
LAVANYA PANWAR/ PRAGYA GUPTA**

ADVOCATES FOR THE PETITIONER

**CHARTER LAW CHAMBERS,
ATTORNEYS-AT-LAW
"CLC HOUSE" G-10,
JUNGPURA EXTN.
NEW DELHI – 110 014
PH: 011 – 4166617/18
Email: desk@charter.law**

**PLACE: NEW DELHI
DATED: 21.10.2026**

BEFORE THE CENTRAL ELECTRICITY REGULATORY COMMISSION, NEW DELHI

PETITION NO. /AT/2026

IN THE MATTER OF: Petition under Section 63 readwith Section 79, including Section 79(1)(c) and (d) of Electricity Act, 2003 seeking adoption of Transmission Charges payable by Central Transmission Utility of India Ltd./ Respondent No. 1 for implementation of the "*Common Transmission System For Evacuation Of Power From Lakadia (Phase-II: 7.5 GW), Jam Khambhaliya (Phase-II: 5.5 GW) And Jamnagar (Phase-I: 1 GW): Part-B*" by the Petitioner.

AND IN THE MATTER OF:

Jam Khambhaliya Jamnagar Power Transmission Limited **...PETITIONER**

VERSUS

Central Transmission Utility of India Ltd & Ors. **...RESPONDENTS**

AFFIDAVIT

I, Mr. Ayyalusamy Saravanan, S/o Narayanasamy Ayyalusamy, aged about 46 years, being the Authorized aSignatory of the Petitioner Companty, having its office at Ceigall House, plot no 70, Institutional Area, Sector 32, Gurugram, Haryana 122001, do hereby affirm and state as follows:

NOTARY Mahender S. Punia GURUGRAM Regn. No. 3999 GOVT. OF INDIA

1. That the deponent is the Authorized Signatory of Petitioner Company and is well versed with the facts and circumstances of the case and therefore competent to swear this Affidavit.

2. That the accompanying petition under Section 63 of the Electricity Act, 2003, has been filed by my nominated counsel under my instruction and the contents of the same are true and correct to the best of my knowledge and belief.

3. That the contents of Para 1 to 30 of the facts mentioned in the petition are true and correct based on the personal knowledge, belief and records maintained in the office and the contents of Para 1 to 30 of the petition are believed to be true on the basis of legal advice.

4. That the Annexures annexed to the petition are correct and true copies of their respective originals.

5. That the Deponent has not filed any other Petition or Appeal before any other forum or court of law with respect to the subject matter of the dispute.

... DEPONENT

VERIFICATION

Verified at Gurugram on this 21 day of October, 2026, that contents of my above noted affidavit are true and correct to my knowledge and no part of it is false and nothing material has been concealed therefrom.

DEPONENT

ATTESTED
MAHENDER S. PUNIA
Advocate & Notary
Distt. Gurugram (Haryana), India

21 OCT 2026

Mahender S. Punia
GURUGRAM
Regn. No. 3999
GOVT. OF INDIA

BEFORE THE HON'BLE CENTRAL ELECTRICITY REGULATORY COMMISSION

NEW DELHI

PETITION NO. /AT/2026

IN THE MATTER OF: Petition under Section 63 readwith Section 79, including Section 79(1)(c) and (d) of Electricity Act, 2003 seeking adoption of Transmission Charges payable by Central Transmission Utility of India Ltd./ Respondent No. 1 for implementation of the "*Common Transmission System For Evacuation Of Power From Lakadia (Phase-II: 7.5 GW), Jam Khambhaliya (Phase-II: 5.5 GW) And Jamnagar (Phase-I: 1 GW): Part-B*" by the Petitioner.

AND IN THE MATTER OF:

Jam Khambhaliya Jamnagar Power Transmission Limited **…PETITIONER**

VERSUS

Central Transmission Utility of India Ltd & Ors. …**RESPONDENTS**

PETITION UNDER SECTIONS 63 AND 79 OF THE ELECTRICITY ACT, 2003 READ WITH CENTRAL ELECTRICITY REGULATORY COMMISSION (PROCEDURE, TERMS AND CONDITIONS FOR GRANT OF TRANSMISSION LICENSE AND OTHER RELATED MATTERS) REGULATIONS, 2024

MOST RESPECTFULLY SHOWETH:

A. EXECUTIVE SUMMARY OF THE PETITION

I. BRIEF BACKGROUND OF THE PETITIONER

1. The Petitioner *viz*. Jam Khambhaliya Jamnagar Power Transmission Limited ("**Petitioner**") is company registered under the Companies Act 2013 which is a Special Purpose Vehicle ("**SPV**") setup for the purpose of Build, Own, Operate and Transfer the Project *viz*. "*Common Transmission System For Evacuation Of Power From Lakadia (Phase-II: 7.5 GW), Jam Khambhaliya (Phase-II: 5.5 GW) And Jamnagar (Phase-I: 1 GW): Part-B*" ("**Transmission Project**").

II. BRIEF BACKGROUND OF THE RESPONDENTS

2. Respondent No. 1 *viz*. Central Transmission Utility of India ("**CTUIL**") is the Nodal Agency under Section 38 of the Electricity Act 2003 ("**EA 2003**") with whom the Petitioner has executed the Transmission Service Agreement dated 19.10.2026 ("**TSA**").

3. Respondent No. 2 *viz*. REC Power Development and Consultancy Limited ("**Respondent No. 2/ BPC**") is the Bid Process Coordinator which owned the present Special Purpose Vehicle (SPV) i.e., Jam Khambhaliya Jamnagar Power

Transmission Limited and pursuant to selection of M/s. Ciegall India Limited as the successful bidder has transferred shareholding to said bidder in terms of the Share Purchase Agreement dated 12.10.2026 ("**SPA**").

4. Respondent No. 3 to 102 *viz*. are the Western Beneficiaries for whom the present system is being setup.

III. BRIEF BACKGROUND OF PROJECT

5. The Petitioner is preferring the present petition under Section 63 read with Section 79(1)(c) & (d) of the Electricity Act, 2003 (hereinafter "**Electricity Act**") seeking adoption of transmission tariff discovered through tariff based competitive bidding process conducted for the Transmission Project which is being established by the Petitioner on Build, Own, Operate and Transfer basis in accordance with the Guidelines issued by the Central Government.

6. For implementation of the Transmission Project, on 02.09.2026, M/s Ciegall India Ltd., the holding company of the Petitioner, was issued a Letter of Intent and declared as successful bidder by the Bid Process Co-ordinator i.e. Respondent No. 2/ BPC, with the

quoted annual transmission charges of INR 6086.70 million, pursuant to the Tariff Based Competitive Bidding ("**TBCB**") process conducted in terms of the Request for Proposal dated 04.05.2026 ("**RFP**") and the Guidelines issued by the Ministry of Power, Govt. of India under Section 63 of the Electricity Act.

7. As per Schedule 2 of the Transmission Service Agreement dated 19.10.2026, the Transmission Project, which is to be executed by the Petitioner, comprises of the following elements:

S. NO.	Transmission Element	Scheduled COD	Percentage of Quoted Transmission Charges recoverable on Scheduled COD of the Element of the Project	Element(s) which are pre- required for declaring the commercial operation (COD) of the respective Element
1.	Establishment of 765/400 kV, 3x1500 MVA & 400/220 kV, 3x500 MVA Nasik Sis (towards South of Nasik) with 2x330 MVAr 765 kV bus reactor and 2x125 MVAr 400 kV bus reactor.	36 Months	100%	All the elements are required simultaneously to ensure their utilization
2.	South Olpad			

	(GIS) - Nasik 765 kV D/C line			
3.	2 Nos. 765 kV line bays at South Olpad (GIS) Sis (Sec-II) for South Olpad - Nasik 765 kV D/C line.			
4.	765 kV, 240 MVAr Switchable line reactors on each circuit at both ends of South Olpad - Nasik 765 kV D/C line.			
5.	Nasik-Pimpalgaon (MSETCL) 400 kV D/C line (Quad ACSR/AAAC/AL59 moose equivalent)			
6.	2 Nos. 400 kV line bays at Pimpalgaon GIS) S/s for Nasik - Pimpalgaon (MSETCL) 400 kV D/C line (Quad ACSR/AAAC/AL59 moose equivalent)			

Thus, as per Schedule 2 of Transmission Service Agreement, the Scheduled Commercial Operation Date (SCOD) of the

Transmission Project will be 19.10.2029 i.e., 36 months since Effective Date (*which is the date of signing of Transmission Service Agreement i.e., 19.10.2026 and submission of Contract Performance Guarantee*).

8. For implementation of the aforementioned Inter-State Transmission System, the successful bidder submitted the lowest quoted annual transmission charges of INR 6086.70 million, which is required to be adopted by this Hon'ble Commission as mandated under Section 63 of the Electricity Act. Hence, the present petition is being preferred by the Petitioner seeking adoption of the annual transmission charges of INR 6086.70 million submitted by its holding company pursuant to the TBCB process conducted by Respondent No. 2/ BPC.

B. DETAILED PETITION

9. The Ministry of Power, Government of India, vide its notification dated 11.02.2026 (**"Notification")** notified Respondent No. 2/ BPC (*erstwhile REC Transmission Projects Company Limited*) to be the Bid Process Coordinator/ BPC for the purpose of selection of a Bidder which can subsequently act as a Transmission

Service Provider (**"TSP"**) for establishing the Transmission Project through tariff based competitive bidding process.

A copy of the Notification dated 11.02.2026 is annexed herewith and marked as **Annexure P - 1**.

10. Pursuant to the acquisition of 100% shareholding of the SPV, RECPDCL/ BPC issued the RFP dated 04.05.2026 for inviting the bids and thereby selecting the prospective TSP in accordance with the "*Tariff Based Competitive-Bidding Guidelines for Transmission Service*" and "*Guidelines for Encouraging Competition in Development of Transmission Projects*" issued by the Government of India, Ministry of Power under Section 63 of the EA 2003. The said RFP was duly forwarded by RECPDCL to this Hon'ble Commission and the MOP vide letters dated 07.05.2026.

A copy of the RFP dated 04.05.2026 along with amendments and letters dated 07.05.2026 issued to the Hon'ble Commission and Ministry of Power, are annexed herewith and marked as **Annexure P- 2 (Colly.).**

11. Meanwhile it is pertinent to mention that a company in the form of SPV and by the name of "Jam Khambhaliya Jamnagar Power Transmission Limited" i.e., the Petitioner herein, was incorporated under the Companies Act, 2013 and thereafter became a wholly owned subsidiary of the BPC/ RECPDCL to initiate the steps towards execution of the Transmission Project. Pursuant to the selection of successful bidder by BPC, the said bidder has to act as the 'Transmission Service Provider' (**"TSP"**) after acquiring the above SPV from BPC.

A copy of the Certificate of Registration of the Applicant Company/ SPV and Board Resolution is enclosed herewith and marked as **Annexure P – 3 (Colly.).**

A copy of the Memorandum of Association along with the Articles of Association of the Petitioner/ SPV is annexed herewith and marked as **Annexure P - 4 (Colly.).**

12. It is submitted that pursuant to the issuance of RFP, Respondent No. 2/ BPC initiated the process of TBCB for selection of the successful bidder (*having prescribed technical and financial capability for establishing the Transmission System*) who must

subsequently acquire the SPV as per the Guidelines issued by the Government of India under Section 63 of Electricity Act. As such, various newspaper advertisements were issued by the BPC inviting Bids from various entities.

Copies of Advertisements inviting Bids from various entities is annexed herewith and marked as **ANNEXURE P – 5 (Colly.)**.

13. That, for the purpose of the evaluation of the Bids submitted by various entities, a Bid Evaluation Committee was also formed by the MOP on 10.06.2026.

A copy of the letter dated 10.06.2026 issued by the MOP is annexed herewith and marked as **ANNEUXRE P - 6**.

14. It is stated that on 23.06.2026, the BPC informed various government authorities *qua* requirement of forest clearance in order to setup the present setup the present project and further BPC also informed the District Collector, Nashik *qua* requirement of land for setting up of the present project.

Copies of the letters dated 23.06.2026 is annexed herewith and marked as **ANNEXURE P – 7 (Colly.)**.

15. It is submitted that M/s Ciegall India Ltd. vide letter dated 20.07.2026 submitted an undertaking to *inter-alia* establish the Transmission Project in terms of the RFP.

A copy of the undertaking dated 20.07.2026 is annexed herewith and marked as **ANNEXURE P - 8.**

16. In the meanwhile, MOP *vide* letter dated 08.09.2026 granted prior approval to the Petitioner, based on the recommendation of Central Electricity Authority (**"CEA"**), under Section 68 (1) of the Electricity Act for installation of overhead transmission lines for implementation of the Transmission Project. In this regard, the Petitioner *vide* letter dated 24.06.2026 also had approached CEA.

The copy of the recommendation of CEA approval under Section 68(1) of EA 203 dated 08.09.2026 is annexed herewith and marked as **ANNEXURE P - 9**.

A copy of the letter dated 24.06.2026 issued by Ministry of Power is annexed herewith and marked as **ANNEXURE P - 10**.

17. Thereafter, in accordance with the provisions of RFP dated 04.05.2026 and the timeline provided therein, M/s Ciegall India

Ltd. submitted its technical and financial bid on 05.08.2026. Subsequently, the e-reverse auction was held on 25.08.2026.

18. In the meantime, BPC made available the survey report alongwith the route alignment drawings in relation to the Transmission Project, to all the prospective bidders, including M/s Ciegall India Ltd.

A copy of the survey report along with the route alignment issued by BPC/ RECPDCL is annexed herewith and marked as **Annexure P - 11.**

19. On 31.08.2026, the Bid Evaluation Committee issued a Certificate and declared that M/s Ciegall India Ltd. had emerged as the successful bidder with the lowest annual transmission charges of Rs. 6086.70 Million, after the conclusion of electronic reverse bidding.

A copy of certificate of bid evaluation committee dated 31.08.2026 is annexed herewith and marked as **ANNEXURE P - 12**.

20. Further, on 02.09.2026, BPC declared M/s Ciegall India Ltd. as a successful bidder in terms of Clause 3.6 of RFP. Accordingly, BPC issued a Letter of Intent (**"LOI"**) to M/s Ciegall India Ltd. Ciegall India Ltd. vide letter dated 02.09.2026 informed RECPDCL of the receipt of LoI and further vide another letter dated 07.09.2026 unconditionally accepted the terms contained in the said LOI.

A copy of the LOI dated 02.09.2026 issued to Ciegall India Ltd, is annexed herewith and marked as **ANNEXURE P – 13.**

A copy of the letter dated 07.09.2026 issued by Ciegall India Ltd. is annexed herewith and marked as **ANNEXURE P – 14.**

21. On 17.09.2026, the Ministry of Power, Government of India approved the sale and transfer of SPV to the successful bidder selected through TBCB process.

A copy of the letter dated 17.09.2026 issued by the MOP is annexed herewith and marked as **ANNEXURE P - 15.**

22. Further, on 16.10.2026, in compliance with the LOI and Clause 2.12 of RFP, M/s Ciegall India Ltd. furnished the Contract

Performance Guarantees (CPG) issued by State Bank of India for an aggregate value of Rs. 90 Crores (Rupees Ninety Crores) separately in favour of Central Transmission Utility of India Ltd.

Copy of the Contract Performance Guarantee dated 16.10.2026 is enclosed herewith and marked as **ANNEXURE P - 16**.

23. Pursuant thereto, in compliance with the obligations provided under Clause 2.15.2 of RFP, on 12.10.2026, M/s Ciegall India Limited executed the Share Purchase Agreement with BPC/ RECPDCL and the SPV. With the execution of the said Agreement, M/s Ciegall India Limited. acquired the 100% shareholding in the Applicant company/ SPV.

A copy of Share Purchase Agreement dated 12.10.2026 is enclosed herewith and marked as **ANNEXURE P - 17**.

24. On 19.10.2026, the Petitioner executed a Transmission Service Agreement (**"TSA"**) with the Respondent No. 1/ Central Transmission Utility of India Ltd. for a term of 35 years.

A copy of the TSA dated 19.10.2026 is annexed herewith and marked as **ANNEXURE P - 18.**

25. Further, after complying with all the obligations relating to acquisition of the Petitioner by Ciegall India Limited., the Petitioner vide an Application/ Petition having Diary No. 818 of 2026, approached this Hon'ble Commission for grant of transmission license in order to execute the Transmission System as a TSP in terms of the RFP and TSA. The said Application was filed on 21.10.2026 and is pending adjudication before the Hon'ble Commission.

26. Furthermore, in terms of the aforementioned obligations provided under RFP, the Petitioner vide the present petition has approached this Hon'ble Commission seeking adoption of the annual transmission charges of INR 6086.70 million submitted by its holding company/ successful bidder pursuant to the TBCB process conducted for implementation of the Transmission Project.

27. Further, the Petitioner states that the present petition is being filed under Section 63 read with Section 79, including Section 79 (1)(c) and (d) of the Electricity Act seeking adoption of the quoted annual Transmission Charges of INR 6086.70 million which has

been determined through transparent competitive bidding process conducted in accordance with the guidelines issued by the Central Government. It is therefore submitted that in accordance with Section 63 read with Section 79 (1)(c) and (d) of the Electricity Act read with Regulation 10(1) of the Central Electricity Regulatory Commission (Procedure, Terms and Conditions for grant of Transmission Licence and related matters) Regulations, 2024 and also in the terms of the RFP documents, this Hon’ble Commission may be pleased to adopt the levelized annual Transmission Charges of INR 6086.70 million as quoted by the holding company of the Petitioner/ selected bidder, with respect to the subject Transmission System.

28. Having regard to the above facts and circumstances, it is submitted that this Hon'ble Commission may kindly adopt the annual Transmission Charges of INR 6086.70 million with respect to the Transmission System being established by the Petitioner.

C. PRAYERS

29. The Petitioner hereby humbly prays the Hon'ble Commission to:

a. Adopt the levelized annual Transmission Charges of INR 6086.70 million quoted by the Petitioner, and discovered through transparent competitive bidding process, for "*Common Transmission System For Evacuation Of Power From Lakadia (Phase-II: 7.5 GW), Jam Khambhaliya (Phase-II: 5.5 GW) And Jamnagar (Phase-I: 1 GW): Part-B*", comprising of the elements/ assets as detailed in the present petition/ application;

b. Allow the "*Common Transmission System For Evacuation Of Power From Lakadia (Phase-II: 7.5 GW), Jam Khambhaliya (Phase-II: 5.5 GW) And Jamnagar (Phase-I: 1 GW): Part-B*" to be implemented by the Petitioner to be part of the Inter-State Transmission System and direct that the recovery of transmission charges shall be in accordance with the terms of the Central Electricity Regulatory Commission (Sharing of Inter-state Transmission Charges and losses) Regulations 2020 and subsequent amendments/ enactments thereto;

c. Condone any inadvertent errors/ omissions/ errors/ shortcomings and permit the Petitioner to add/ change/

modify/ alter these filings and make further submissions as may be required at a future date; and

d. Pass any such other order / orders, as may be deemed fit and proper in the facts and circumstances of the case.

IV. ANNEXURES:

30. The details of the Annexures is same provided in the Index.

V. PROOF OF PAYMENT OF FEES FOR FILING OF THE PETITION

Fee is paid online on 21.10.2026 bearing transaction No. 17e8a941e7a2a106c9cd

Dated at Gurugram , on this 21 day of October, 2026

Hemant Singh Digitally signed by Hemant Singh Date: 2026.10.21 23:16:43 +05'30'

PETITIONER

ADVOCATES FOR THE PETITIONER
CHARTER LAW CHAMBERS
"CLC HOUSE"
G-10, JANGPURA EXTENSION
NEW DELHI – 110014
PHONE:011 – 41688816/ 41688817
E-mail: desk@charter.law

DECLARATION

The Petitioner above named hereby solemnly declares that nothing material has been concealed or suppressed and further declares that the enclosures and typed set of material papers relied upon and filed herewith are true copies of original(s)/ fair representation of the original(s)/ true translation thereof.

Verified at Gurugram on this 21 day of October, 2026.

Hemant Singh Digitally signed by Hemant Singh Date: 2026.10.21 23:17:10 +05'30'

PETITIONER

ADVOCATES FOR THE PETITIONER

CHARTER LAW CHAMBERS
"CLC HOUSE"
G-10, JANGPURA EXTENSION
NEW DELHI – 110014
PHONE:011 – 41688816/ 41688817
E-mail: desk@charter.law

VERIFICATION

Verified at Gurugram on this 21 day of October, 2026 that the contents of my above noted affidavit are true and correct to my knowledge and no part of it is false and nothing material has been concealed therefrom.

DEPONENT

रजिस्ट्री सं. डी.एल.- 33004/99 REGD. No. D. L.-33004/99

भारत का राजपत्र
The Gazette of India

सी.जी.-डी.एल.-अ.-19022026-270309
CG-DL-E-19022026-270309

असाधारण
EXTRAORDINARY

भाग II—खण्ड 3—उप-खण्ड (ii)
PART II—Section 3—Sub-section (ii)

प्राधिकार से प्रकाशित
PUBLISHED BY AUTHORITY

सं. 687] नई दिल्ली, बृहस्पतिवार, फरवरी 12, 2026/माघ 23, 1947
No. 687] NEW DELHI, THURSDAY, FEBRUARY 12, 2026/MAGHA 23, 1947

विद्युत मंत्रालय

अधिसूचना

नई दिल्ली, 11 फरवरी, 2026

का.आ. 725(अ).— विद्युत अधिनियम, 2003 (2003 की सं .36) की धारा 63 के अंतर्गत परिचालित दिशा-निर्देशों के पैरा 3 के उप पैरा-3.2 द्वारा प्रदत्त शक्तियों का प्रयोग करते हुए केंद्र सरकार ने 37वीं राष्ट्रीय पारेषण समिति की बैठक की सिफारिशों पर, संबंधित बोली प्रक्रिया समन्वयक-(बीपीसी) के विवरण सहित टीबीसीबी मोड के अंतर्गत निम्नलिखित पारेषण स्कीमों को एतदद्वारा अधिसूचित करती है: -

1. भड़ला-।।।, रामगढ़ पीएस और कानपुर में संवर्धन। (पीजी)

संभावित कार्यान्वयन समय सीमा :दिनांक 20.01.2029

बीपीसी :आरईसी पावर डेवलपमेंट एंड कंसल्टेंसी लिमिटेड

कार्यक्षेत्र:

क्र सं.	पारेषण स्कीम का कार्यक्षेत्र	घटक विवरण
1.	765/400/220 केवी भड़ला-III पीएस में 400/220 केवी, 5x500 एमवीए (छठे से 10वें) आईसीटी का	• 500 एमवीए, 400/220 केवी आईसीटी - 5 • (220 केवी सेक्शन-2 (छठे से 9वें) में 4 आईसीटी

	संवर्धन	और 220 केवी सेक्शन-1 (10वां) में 1 आईसीटी) • 400 केवी आईसीटी बे - 5 • 220 केवी आईसीटी बे - 4 • 220 केवी आईसीटी (जीआईएस) बे - 1 (10 वें आईसीटी के लिए)। • आईसीटी (10वें) के 220 केवी साइड से 220 केवी जीआईएस बे (सेक्शन-1) के इंटरकनेक्शन के लिए 220 केवी जीआईएस बस डक्ट / केबल
2.	765/400/220 केवी भड़ला-III पीएस में 5, 220 केवी लाइन बे का कार्यान्वयन।	• 220 केवी लाइन बे -5
3.	765/400/220 केवी भड़ला।।।- पीएस में एक 400 केवी लाइन बे का कार्यान्वयन।	• 400 केवी लाइन बे -5
4.	765 / 400/220 केवी भड़ला-III पीएस पर 2 सेट 400 केवी सेक्शनलाइजर बे का कार्यान्वयन	• 400 केवी सेक्शनलाइज़र बे -2 सेट
5.	765/400 केवी रामगढ़ पीएस में 765/400 केवी, 2x1500 एमवीए तीसरे) और चौथे) आईसीटी का संवर्धन	• 1500 एमवीए, 765/400 केवी आईसीटी -2 • 765 केवी आईसीटी बे -2 • 400 केवी आईसीटी बे -2
6.	765/400 केवी रामगढ़ पीएस में 400/220 केवी, 2x500 एमवीए तीसरे) और चौथे) आईसीटी का संवर्धन	• 500 एमवीए, 400/220 केवी आईसीटी -2 • 400 केवी आईसीटी बे -2 • 220 केवी आईसीटी बे -2
7.	765/400 केवी रामगढ़ पीएस में दो 220 केवी लाइन बे का कार्यान्वयन	• 220 केवी लाइन बे -2
8.	765/400 केवी रामगढ़ पीएस में एक 400 केवी लाइन बे का कार्यान्वयन	• 400 केवी लाइन बे -1
9.	765/400 केवी कानपुर सबस्टेशन में (पीजी) 765/400 केवी, 1x1500 एमवीए (तीसरा) आईसीटी का संवर्धन	• 1500 एमवीए (3 x 500 एमवीए), 765/400 केवी आईसीटी - 1 • 765 केवी आईसीटी बे (जीआईएस) जिसमें व्यास का पूरा होना शामिल है। • मौजूदा स्पेयर बे में 400 केवी आईसीटी बे (जीआईएस) • समाप्ति के साथ सभी संबंधित जीआईएस डक्ट।

अनंतपुरम-III पीएस आरईजेड चरण-1 (3 गीगावाट) के एकीकरण के लिए पारेषण प्रणाली।

संभावित कार्यान्वयन समय सीमा :30 माह।

बीपीसी :पावर फाइनेंस कॉपोरेशन लिमिटेड (पीएफसी)

कार्यक्षेत्र:

क्रसं.	पारेषण स्कीम का कार्यक्षेत्र	क्षमता /किमी
1	अनंतपुरम-III पीएस में 2 x 330 एमवीएआर (765 केवी) बस रिएक्टर सहित 400 केवी स्तर पर प्रत्येक 4500 एमवीए के दो (2) खंडों के प्रावधान के साथ-साथ अनंतपुर जिले में उरवाकोंडा/ बेलुगुप्पा/कल्याणदुर्ग क्षेत्रों के पास 3x1500 एमवीए, 765/400 केवी और 7x500 एमवीए, 400/220 केवी अनंतपुरम-III	• 765/400 केवी, 1500 एमवीए, आईसीटी - 3 (1 अतिरिक्त यूनिट सहित 10x500 एमवीए) • 765 केवी आईसीटी बे - 3 • 400 केवी आईसीटी बे- 3 • 765 केवी लाइन बे - 2 (अनंतपुरम-III पीएस पर अनंतपुरम-III से कृष्णागिरि 765 केवी डी/सी लाइन की समाप्ति के लिए) • 765 केवी, 330 एमवीएआर बस रिएक्टर- 2

	पूलिंग स्टेशन की स्थापना। **भावी स्थान का प्रावधान :** • 765/400 केवी, 1500 एमवीए, आईसीटी – 3 • 765 केवी आईसीटी बे – 3 • 400 केवी आईसीटी बे – 3 • 400/220 केवी, 500 एमवीए, आईसीटी – 7 • 400 केवी आईसीटी बे – 7 • 220 केवी आईसीटी बे – 7 • 765 केवी लाइन बे – 12 • (एसएलआर के प्रावधान के साथ) • 400 केवी लाइन बे – 11 (एसएलआर के प्रावधान के साथ) • 220 केवी लाइन बे – 15 • 220 केवी बस सेक्शनलाइज़र: 2 सेट • 220 केवी बस कपलर (बीसी) बे – 2 • 220 केवी ट्रांसफर बस कपलर (टीबीसी) बे – 2 • 400 केवी बस सेक्शनलाइज़र: 1 सेट	(बस रिएक्टर और लाइन रिएक्टर के लिए एक स्विचेबल अतिरिक्त यूनिट सहित 7×110 एमवीएआर) • 765 केवी बस रिएक्टर बे - 2 • 400/220केवी, 500 एमवीए, आईसीटी - 7 • 400 केवी आईसीटी बे - 7 • 220 केवी आईसीटी बे - 7 • 220 केवी लाइन बे - 10 • 220 केवी बस सेक्शनलाइज़र: 1 सेट • 220 केवी बस कपलर (बीसी) बे - 2 • 220 केवी ट्रांसफर बस कपलर (टीबीसी) बे - 2
2	अनन्तपुरम-III पीएस में ±300 एमवीएआर स्टेटकॉम	• 400 केवी बे -1 • ± 300 एमवीएआर स्टेटकॉम -1 सेट
3	अनंतपुरम-III छोर के दोनों सर्किटों पर 240 एमवीएआर एसएलआर के साथ (कनवर्टिबल) -अनंतपुरम III से कृष्णागिरि 765 केवी डी / सी लाइन	~ 140 किमी • 765 केवी लाइन बे - 2 (कृष्णागिरि में) • अनंतपुरम-III पीएस में 765 केवी, 240 एमवीएआर एसएलआर - 2 (एक स्विचेबल अतिरिक्त यूनिट सहित 7x80 एमवीएआर) अनंतपुरम-III पीएस में 765 केवी एसएलआर के लिए स्विचिंग उपकरण - 2

गुजरात में जाम खंभालिया आरई परियोजना से विद्युत के एकीकरण के लिए पारेषण प्रणाली – चरण-II (5500 मेगावाट) और जामनगर चरण-I (1000 मेगावाट)।

संभावित कार्यान्वयन समयसीमा :31.03.2030

बीपीसी :पावर फाइनेंस कॉपोरेशन लिमिटेड (पीएफसी)

कार्यक्षेत्र:

क्रसं.	पारेषण स्कीम का कार्यक्षेत्र	क्षमता किमी /
1.	2x330 एमवीएआर, 765 केवी बस रिएक्टर एवं 2x125 एमवीएआर, 420 केवी बस रिएक्टर के साथ कल्याणपुर के निकट (जीआईएस)4x1500 एमवीए, 765/400 केवी तथा 10x500 एमवीए, 400/220 केवी सबस्टेशन की स्थापना। **भावी प्रावधान :(स्थान के लिए)** 1. बे के साथ-साथ 765/400 केवी, 1500	• 765 / 400 केवी, 1500 एमवीए आईसीटी - 4 (एक अतिरिक्त आईसीटी यूनिट सहित 13 x 500 एमवीए सिंगल फेज यूनिट) (सेक्शन-I पर 3 और सेक्शन-II पर 1) • 400/220 केवी, 500 एमवीए आईसीटी – 10 (सेक्शन-I पर 5 और सेक्शन-II पर 5)

	एमवीए आईसीटी - 2 (सेक्शन-II पर) 2. स्विचेबल लाइन रिएक्टर के साथ-साथ 765 केवी लाइन बे - 8 (सेक्शन-1 पर 4 और सेक्शन-II पर 4) 3. बे के साथ-साथ 765 केवी, 330 एमवीएआर बस रिएक्टर : 2 (सेक्शन-I पर 1 और सेक्शन-II पर 1) 4. स्विचेबल लाइन रिएक्टर के साथ-साथ 400 केवी लाइन बे - 12 । (सेक्शन-1 पर 4 और सेक्शन-II पर 8) 5. बे के साथ-साथ 420 केवी, 125 एमवीएआर बस रिएक्टर: 2 (सेक्शन-I पर 1 सेक्शन-II पर 1) ➢ 220 केवी लाइन बे: सेक्शन-I पर 3 और सेक्शन-II पर 3 ➢ 400 केवी एचवीएसी स्विचयार्ड तथा सभी संबंधित उपकरणों (फिल्टर सहित)/बस एक्सटेंशन आदि सहित संबद्ध इंटरकनेक्शन (प्रत्येक 400 केवी बस सेक्शन पर 2x1500 मेगावाट पोल) के साथ-साथ 6000 मेगावाट, ± 800 केवी कल्याणपुर (जीआईएस) (एचवीडीसी) [एलसीसी] टर्मिनल स्टेशन (4x1500 मेगावाट) की स्थापना। ➢ 400 केवी बे के साथ ±400 एमवीएआर स्टेटकॉम- 2 (सेक्शन-1 पर 1 और सेक्शन-2 पर 1)	• 765 केवी आईसीटी बे - 4 • 400 केवी आईसीटी बे - 14 • 220 केवी आईसीटी बे - 10 • 765 केवी लाइन बे - 4 (सेक्शन-1 पर 2 और सेक्शन-II पर 2) • 765 केवी सेक्शनलाइज़र बे- 1 सेट • 400 केवी सेक्शनलाइजेशन बे- 1 सेट • 220 केवी सेक्शनलाइजेशन बे- 1 सेट • 1x330 एमवीएआर, 765 केवी बस रिएक्टर- 2 (बस / लाइन रिएक्टरों के लिए एक अतिरिक्त यूनिट सहित 7x110 एमवीएआर सिंगल फेज रिएक्टर) (सेक्शन-I पर 1 और सेक्शन-II पर 1) • 765 केवी बस रिएक्टर बे- 2 • 125 एमवीएआर, 420 केवी रिएक्टर- 2 (सेक्शन-I पर 1 और सेक्शन-II पर 1) • 400 केवी रिएक्टर बे- 2 • 220 केवी बीसी बे- 2 • 400 केवी लाइन बे – 1 (सेक्शन-I में आरई परियोजना के इंटर-कनेक्शन के लिए) • 220 केवी लाइन बे - 12 (आरई परियोजनाओं के इंटर-कनेक्शन के लिए, सेक्शन-1 पर 6 और सेक्शन-II पर 6)
2.	कल्याणपुर (जीआईएस) जामनगर - (जीआईएस) 765 केवी डीसी लाइन/	95 किमी
3.	जामनगर (जीआईएस)एसएस/ पर दो 765 केवी लाइन बे	765 केवी लाइन बे **-2** (जीआईएस)
4.	कल्याणपुर राजकोट के) सौराष्ट्र - (जीआईएस) (जीईटीसीओ) (निकट**765** केवी डीसी लाइन/	225 किमी
5.	कल्याणपुर (जीआईएस) – सौराष्ट्र (राजकोट के पास) (जीईटीसीओ) 765 केवी डी/सी लाइन (एनजीआर बाईपास व्यवस्था के साथ) के कल्याणपुर (जीआईएस) छोर के प्रत्येक सर्किट पर 330 एमवीएआर स्विचेबल लाइन रिएक्टर	• 330 एमवीएआर, 765 केवी स्विचेबल लाइन रिएक्टर- 2 • 765 केवी लाइन रिएक्टर के लिए स्विचिंग उपकरण- 2
6.	सौराष्ट्र (राजकोट के निकट) (जीईटीसीओ) एस/एस पर दो 765 केवी लाइन बे	• 765 केवी लाइन बे -2
7.	कल्याणपुर (जीआईएस) में 1200 एमवीए (न्यूनतम) के पीसीसी पर सिंक्रोनस कंडेनसर की स्थापना (+300/-200एमवीएआर) (न्यूनतम) और शॉर्ट सर्किट का योगदान – 2 जड़त्व का मान (मेगावाट-सेकेंड) आरएफपी दस्तावेज में परिभाषित किया जाएगा।	• 400 **केवी संबद्ध बे के साथ-साथ सिंक्रोनस कंडेनसर -** 2 **(प्रत्येक सेक्शन-1 और 2 पर एक)**

8.	जामनगर (जीआईएस) एस/एस में 3x500 एमवीए, 400/220 केवी आईसीटी की स्थापना के साथ 220 केवी स्विचयार्ड का निर्माण	• 220 केवी बस सेक्शन-I का निर्माण • 220 केवी बीसी बे - 1 • 400/220 केवी, 500 एमवीए आईसीटी – 3 (400 केवी और 220 केवी सेक्शन-I पर) • 400 केवी आईसीटी बे- 1 (2 आईसीटी को 2 जीआईएस बे में टर्मिनेट किया जाना है, जिसे जामनगर एस/एस में व्यास कंप्लीशन के हिस्से के तौर पर "जामनगर क्षेत्र में फेज़-I के तहत लगभग 3.6 गीगावाट लोड की आपूर्ति के लिए गुजरात में नेटवर्क विस्तार स्कीम" स्कीम के तहत लागू किया जा रहा है) • 220 केवी आईसीटी बे - 3
9.	आरई इंटरकनेक्शन के लिए चार 220 केवी लाइन बे	220 केवी लाइन बे - 4

टिप्पणी:

- *जामनगर एस क्रम सं ,एस का टीएसपी/**3, 8** और **9** पर निशुल्क आधार पर उपर्युक्त कार्यक्षेत्र के लिए : स्थान उपलब्ध कराएगा।*
- *जीईटीसीओ क्रम सं ,**6** में उपर्युक्त कार्यक्षेत्र के लिए निशुल्क आधार पर स्थान उपलब्ध कराएगा।:*
- *डेढ़ ब्रेकर स्कीम में व्यास को पूरा करने (जीआईएस)के लिए आवश्यक बे का निष्पादन भी टीएसपी (ओं) द्वारा किया जाएगा।*
- *उपर्युक्त सिंकोनों -.सं.क्र)7 पर को इसके टैरिफ तंत्र के लिए स्टेटकॉम और एसवीसी के समान ("पारेषण परिसंपत्ति" माना जाएगा।*

4. **गुजरात में लकड़िया आरईजेड में आरई परियोजनाओं से विद्युत के एकीकरण के लिए पारेषण प्रणाली) ।।-चरण -7500 मेगावाट(**

संभावित कार्यान्वयन समयसीमा :36 महीने

बीपीसी :आरईसी पावर डेवलपमेंट एंड कंसल्टेंसी लिमिटेड

कार्यक्षेत्र:

क्रसं.	**पारेषण स्कीम का कार्यक्षेत्र**	**क्षमता किमी /**
1.	2x330 एमवीएआर 765 केवी बस रिएक्टर और 2x125 एमवीएआर 400 केवी बस रिएक्टर के साथ 765/400 केवी, 6x1500 एमवीए और 10x500 एमवीए, 400/220 केवी लकड़िया-।। (चित्रोड के निकट) की स्थापना।	• 765/400 केवी, 1500 एमवीए आईसीटी - 6 (एक अतिरिक्त आईसीटी यूनिट सहित 19 x 500 एमवीए सिंगल फेज यूनिट) • 400/220 केवी आईसीटी - 10 (सेक्शन-I पर 5 और सेक्शन-II पर 5)
	[765 केवी, 400 केवी और 220 केवी स्तरों को सेक्शनलाइज़र व्यवस्था के साथ दो खंडों में स्थापित किया जाएगा। 220 केवी सेक्शनलाइज़र को सामान्य रूप से खुला रखा जाएगा और आकस्मिक स्थिति में बंद किया जा सकता है। 400 केवी और 765 केवी सेक्शनलाइज़र को सामान्य रूप से बंद रखा जाएगा। ग्रिड ऑपरेटर की आवश्यकता के अनुसार प्रस्तावित एचवीडीसी कार्यान्वयन के बाद बस संचालन की समीक्षा की	• 765 केवी आईसीटी बे - 6 • 400 केवी आईसीटी बे - 16 • 220 केवी आईसीटी बे - 10 • 1x330 एमवीएआर, 765 केवी बस रिएक्टर- 2 (बस/लाइन रिएक्टर के लिए एक अतिरिक्त इकाई सहित 7x110 एमवीएआर सिंगल फेज रिएक्टर) (सेक्शन-I पर 1 और सेक्शन-II पर 1) • 765 केवी बस रिएक्टर बे- 2 • 765 केवी लाइन बे- 8 (सेक्शन-I पर 4 (हलवाद

	जा सकती है। *(3x1500 एमवीए 765/400 केवी आईसीटी, 5x500 एमवीए 400/220 केवी आईसीटी, 1x330 एमवीए 765 केवी बीआर और 1x 125 एमवीएआर 420 केवी बीआर सेक्शन-1 पर होंगे और 3 x1500 एमवीए 765/400 केवी आईसीटी, 5x500 एमवीए 400/220 केवी आईसीटी, 1x330 एमवीए 765 केवी बीआर और 1x125 एमवीएआर 420 केवी बीआर सेक्शन-2 पर होंगे)]* **भावी प्रावधान (स्थान के लिए):** ➢ 765 केवी लाइन बे के साथ स्विचेबल लाइन रिएक्टर - 6 (सेक्शन-I पर 2 सेक्शन-II पर 4) ➢ 765 केवी बस रिएक्टर के साथ बे: 2 (सेक्शन-I पर 1 और सेक्शन-II पर पर 1) ➢ स्विचेबल लाइन रिएक्टर के साथ 400 केवी लाइन बे - 7 (सेक्शन-I पर 3 और सेक्शन-II पर 4) + एचवीडीसी इंटरकनेक्शन के लिए चार 400 केवी बे (प्रत्येक सेक्शन पर 2) ➢ बे के साथ-साथ 420 केवी, 125 एमवीएआर बस रिएक्टर: 2 (सेक्शन-I पर 1 और सेक्शन-II पर 1) ➢ 220 केवी लाईन बे-2 (सेक्शन-I पर 1 और सेक्शन-II पर 1) ➢ 400 केवी एचवीएसी स्विचयार्ड और सभी संबंधित उपकरणों (फिल्टर सहित)/बस एक्सटेंशन आदि सहित संबद्ध इंटरकनेक्शन (प्रत्येक 400 केवी सेक्शन पर 2x1500 मेगावाट पोल) के साथ-साथ 6000 मेगावाट, ± 800 केवी लकड़िया-II (एचवीडीसी) [एलसीसी] टर्मिनल स्टेशन (4x1500 मेगावाट) की स्थापना। ➢ 400 केवी बे के साथ-साथ सिंक्रोनस कंडेनसर (+300/-200 एमवीएआर)- 2 (सेक्शन-I पर 1 और सेक्शन-II पर 1)	डी/सी के लिए 2 और अहमदाबाद डी/सी के लिए 2) और सेक्शन-II पर 4 (कांडला डी/सी के लिए 2 और वातमन के लिए 2) • 765 केवी सेक्शनलाइज़र बे- 1 सेट • 400 केवी सेक्शनलाइज़र बे- 1 सेट • 220 केवी सेक्शनलाइज़र बे- 1 सेट • 220 केवी बीसी - 2 • 220 केवी टीबीसी - 2 • 125 एमवीएआर, 420 केवी रिएक्टर - 2 (सेक्शन-I पर 1 और सेक्शन-II पर 1) • 400 केवी रिएक्टर बे - 2 • 400 केवी लाइन बे - 3 (आरई परियोजनाओं के इंटरकनेक्सन के लिए सेक्शन-I पर 2 और सेक्शन-II पर 1) • 220 केवी लाइन बे- 15 (आरई परियोजनाओं के इंटरकनेक्सन के लिए सेक्शन-I पर 7 और सेक्शन-II पर 8)
2.	लकड़िया-II पर सिंक्रोनस कंडेनसर की स्थापना (+300/-200 एमवीएआर) (न्यूनतम) तथा 1200 एमवीए (न्यूनतम) के पीसीसी पर शॉर्ट सर्किट कंट्रीब्यूशन। जड़त्व का मान (मेगावाट-एस) आरएफपी दस्तावेज़ में परिभाषित किया जाएगा।	संबदध 400 केवी बे के साथ-साथ सिंक्रोनस कंडेनसर -2 (सेक्शन-I और सेक्शन-II प्रत्येक पर एक)
3.	लकड़िया-II पर हलवाद - कांडला 765 केवी डी/सी लाइन का लिलो	लिलो मार्ग की लंबाई ~22 किमी. (88 सीकेएम)
4.	लकड़िया-II- अहमदाबाद 765 केवी डी/सी लाइन	190 किमी (380 सीकेएम)
5	लकड़िया-II - अहमदाबाद 765 केवी डी/सी	765 केवी लाइन बे - 2 (एआईएस)

	लाइन के लिए अहमदाबाद एस/एस में दो 765 केवी लाइन बे	
6	लकड़िया-।। - अहमदाबाद 765 केवी डी/सी लाइन के अहमदाबाद छोर के प्रत्येक सर्किट पर 330 एमवीएआर स्विचेबल लाइन रिएक्टर	• 330 एमवीएआर, 765 केवी स्विचेबल लाइन रिएक्टर- 2 • 765 केवी स्विचेबल लाइन रिएक्टर बे - 2 • अहमदाबाद एस/एस में 110 एमवीएआर स्पेयर सिंगल फेज रिएक्टर पहले से ही उपलब्ध हैं और इसका उपयोग एसडब्ल्यू एलआर के लिए किया जाएगा।
7	लकड़िया-।। - वटामण 765 केवी डी/सी लाइन (220 किमी)	220 किमी (440 सीकेएम)
8	लकड़िया- 2,765 केवी डी/सी लाइन के लिए वटामण एस/एस में 765 केवी लाइन बे	765 केवी लाइन बे -2 (एआईएस)
9	लकड़िया-।। - वटामण 765 केवी डी/सी लाइन के दोनों छोरों के प्रत्येक सर्किट पर 765 केवी, 240 एमवीएआर स्विचेबल लाइन रिएक्टर	• 240 एमवीएआर, 765 केवी स्विचेबल लाइन रिएक्टर - 4 (लकड़िया-II छोर के लिए 2 और वटामण छोर के लिए 2) • 765 केवी स्विचेबल लाइन रिएक्टर बे - 4 (लकड़िया-।। के लिए 2 और वटामण के लिए 2)। • उपर्युक्त 240 एमवीएआर एसडब्ल्यू एलआर के लिए लकड़िया-।। पर 80 एमवीएआर अतिरिक्त सिंगल-फेज रिएक्टर। • वटामण एस/एस पर 80 एमवीएआर स्पेयर सिंगल-फेज रिएक्टर पहले से ही उपलब्ध हैं और उसी का उपयोग एसडबल्यू एलआर के लिए किया जाएगा।

नोट:

- *अहमदाबाद एस/एस और वटामण एस/एस के टीएसपी को अपने संबंधित सबस्टेशनों में उपर्युक्त कार्यक्षेत्र के लिए स्थान (नि:शुल्क) उपलब्ध कराएगा।*
- *उपर्युक्त सिंकोनों -.सं.क्र) 2 पर को इसके टैरिफ तंत्र के लिए स्टेटकॉम और एसवीसी के समान ('पारेषण परिसंपत्ति' माना जाएगा।*

5. लकड़िया (चरण-2: 7.5 गीगावाट), जाम खंभालिया (चरण-2: 5.5 गीगावाट) और जामनगर (चरण-1: 1 गीगावाट) से विद्युत निकासी के लिए सामान्य पारेषण प्रणाली- भाग- क

संभावित कार्यान्वयन समयसीमा :36 महीने

बीपीसी :पावर फाइनेंस कॉपोरेशन लिमिटेड (पीएफसी)

कार्यक्षेत्र:

क्रसं.	पारेषण स्कीम का कार्यक्षेत्र	*क्षमता किमी /*
1.	दक्षिण ओलपैड एस में/एस (जीआईएस) 1x1500 एमवीए, 765/400 केवी (तीसरा) आईसीटी द्वाराट्रांसफॉर्मेशन क्षमता में संवर्धन	• 765/400 केवी, 1500 एमवीए आईसीटी - 1
2.	लकड़िया (जीआईएस) वडोदरा -765 केवी डी सी लाइन/के निर्माण हेतु वड़ोदरा हलवाद - (जीआईएस)765 केवी डीसी / हलवाद - लाइन को लकाडिया765 केवी	400 केवी आईसीटी बे - 1 (जीआईएस) (इसे खावदा फेज-4 भाग-ग स्कीम के तहत व्यास कम्पलीशन के एक भाग के रूप में निर्मित किया जा रहा है)

	डी/सी लाइन (हलवाद एस/एस के निकट) में समाप्त किया जाएगा।	
3.	लकड़िया - वडोदरा 765 केवी डी /सी लाइन (ऊपर क्रमांक 2 पर विवरण के अनुसार बनाई गई) की समाप्ति के लिए वड़ोदरा (जीआईएस) छोर पर 765 केवी लाइन बे	• 765 केवी लाइन बे - 2 (जीआईएस) *(इसका निर्माण "फेज़- IV (7 गीगावाट): भाग ख के तहत गुजरात के खावदा क्षेत्र में संभावित नवीकरणीय ऊर्जा क्षेत्र से विद्युत निकासी के लिए पारेषण प्रणाली" के तहत व्यास कम्पलीशन के हिस्से के रूप में किया जा रहा है। इन बेज़ पर लाइन को समाप्त करने के लिए लाइन साइड उपकरण को इस पारेषण स्कीम के तहत लागू किया जाएगा)*
4.	लकड़िया- वडोदरा (जीआईएस) 765 केवी डी/सी लाइन के वडोदरा (जीआईएस) छोर के प्रत्येक सर्किट पर 765 केवी, 240 एमवीएआर स्विचेबल लाइन रिएक्टर। (क्र.सं.- 2 पर उपर्युक्त विवरण के अनुसार निर्मित)	• 240 एमवीएआर, 765 केवी स्विचेबल लाइन रिएक्टर- 2 । • 765 केवी स्विचेबल लाइन रिएक्टर बे- 2 (इसका निर्माण "फेज़- IV (7 गीगावाट): भाग ख के तहत गुजरात के खावदा क्षेत्र में संभावित नवीकरणीय ऊर्जा क्षेत्र से विद्युत निकासी के लिए पारेषण प्रणाली" के तहत व्यास कम्पलीशन के हिस्से के रूप में किया जा रहा है। • वडोदरा एस/एस में 80 एमवीएआर, 1 फेज अतिरिक्त रिएक्टर पहले से ही उपलब्ध है और उसी का इस्तेमाल स्विचेबल एलआर के लिए किया जाएगा।
5.	लकड़िया- वडोदरा (जीआईएस) 765 केवी डी/सी लाइन के हलवाद स्विचिंग स्टेशन के बाईपास बिंदु पर 765 केवी, 330 एमवीएआर स्विचेबल मिड-पॉइंट रिएक्टर (टिप्पणी घ देखें)	• 330 एमवीएआर, 765 केवी स्विचेबल लाइन रिएक्टर- 2 • 765 केवी स्विचेबल लाइन रिएक्टर बे- 2 • हलवाद एस/एस के निकट बाईपास बिंदु पर 110 एमवीएआर अतिरिक्त सिंगल फेज रिएक्टर।

टिप्पणी :

(क). डेढ़ ब्रेकर स्कीम में व्यास जीआईएस)) को पूरा करने के लिए ज़रूरी बे का काम भी टीएसपी (ओं) द्वारा किया जाएगा।

(ख). दक्षिण ओलपाड एसएस क/ा टीएसपी ,क्रसं. 1 के अनुसार ऊपर्युक्त कार्यक्षेत्र के लिए स्थान (निशुल्क) उपलब्ध कराएगा।

(ग). वडोदरा का टीएसपी (जीआईएस), ऊपर्युक्त कार्यक्षेत्र के लिए क्र सं .3 और 4 के अनुसार स्थान (निशुल्क)उपलब्ध कराएगा।

(घ). (घ). चूंकि "चरण-3 भाग क के तहत खवड़ा आरई पार्क से अतिरिक्त 7 गीगावाट आरई की निकासी के लिए पारेषण स्कीम" परियोजना (हलवाद ट्रांसमिशन लिमिटेड- एईएसएल द्वारा कार्यान्वयनाधीन) के तहत हलवाद स्विचिंग स्टेशन पर स्थान आवंटित करते समय लकड़िया - वडोदरा (जीआईएस) 765 केवी डी/सी लाइन पर हलवाद स्विचिंग स्टेशन के बाईपास पॉइंट पर 765 केवी, 330 एमवीएआर स्विचेबल मिड-पॉइंट रिएक्टर के प्रावधान की परिकल्पना नहीं की गई थी, इसलिए रिएक्टर को हलवाद स्विचिंग स्टेशन पर अन्य पारेषण घटकों के लिए आरक्षित स्थान का उपयोग करके स्थापित किया जाएगा, जिसे आरएफपी दस्तावेज़ में निर्दिष्ट किया जाएगा।

6. लकाडिया -चरण)2: 7.5 गीगावाट(, जाम खंभालिया -चरण)2: 5.5 गीगावाट-चरण) और जामनगर (1: 1 गीगावाट(से विद्युत निकासी के लिए सामान्य पारेषण प्रणाली ख- भाग –

संभावित कार्यान्वयन समयसीमा :36 महीने

बीपीसी :आरईसी पावर डेवलपमेंट एंड कंसल्टेंसी लिमिटेड

कार्यक्षेत्र:

क्रसं.	**पारेषण स्कीम का कार्यक्षेत्र**	*क्षमता किमी /*
1.	2x330 एमवीएआर 765 केवी बस रिएक्टर एवं 2x125 एमवीएआर 400 केवी बस रिएक्टर के साथ 765/400 केवी, 3x1500 एमवीए और 400/220 केवी, 3x500 एमवीए नासिक एस एस/ की स्थापना (नासिक के दक्षिण की ओर) **भावी प्रावधान (स्थान के लिए)** ➢ बे के साथ 765/400 केवी, 1500 एमवीए आईसीटी - 3 (सेक्शन-II पर)। ➢ स्विचेबल लाइन रिएक्टरों के साथ 765 केवी लाइन बे - 10 (सेक्शन-I पर 4 और सेक्शन-II पर 6)। ➢ बे के साथ 765 केवी, 330एमवीए बस रिएक्टर: 2 (सेक्शन-II पर) ➢ 765 केवी सेक्शनलाइजर बे: 1 सेट ➢ 400 केवी सेक्शनलाइजर बे: 1 सेट ➢ बे के साथ 400/220 केवी, 500 एमवीए आईसीटी- 7 (सेक्शन-I पर 2 और सेक्शन-II पर 5)। ➢ स्विचेबल लाइन रिएक्टर के साथ 400 केवी लाइन बे - 10 (सेक्शन-I पर 4 और सेक्शन-II पर 6)।	• 765 / 400 केवी, 1500 एमवीए आईसीटी - 3 (एक अतिरिक्त आईसीटी इकाई सहित 10x500 एमवीए एकल चरण इकाइयां • • 400/220केवी आईसीटी - 3 • 765 केवी आईसीटी बे - 3 • 400 केवी आईसीटी बे - 6 • 220 केवी आईसीटी बे - 3 • 765 केवी लाइन बे - 2 • 1x330 एमवीएआर, 765 केवी बस रिएक्टर - 2 (बस / लाइन रिएक्टर के लिए एक अतिरिक्त इकाई सहित 7x110 एमवीएआर सिंगल फेज रिएक्टर) • 765 केवी बस रिएक्टर बे - 2 • 220 केवी बीसी - 1 • 220 केवी टीबीसी - 1 • 125 एमवीएआर, 420 केवी रिएक्टर - 2 • 400 केवी रिएक्टर बे - 2 • 400 केवी लाइन बे - 2

	➢ बे के साथ 420 केवी, 125 एमवीएआर बस रिएक्टर- 2 (सेक्शन-II पर)। ➢ 220 केवी सेक्शनलाइजर बे- 1 सेट ➢ 220 केवी बीसी और टीबीसी - प्रत्येक 1 ➢ 220 केवी लाइन बे: सेक्शन-I पर 2 और सेक्शन-II पर 8	• • 220 केवी लाइन बे - 6 (एमएसईटीसीएल 220 केवी लाइनों के लिए: अडवाड़ी 220 केवी डी/सी, नासिक जीसीआर 220 केवी डी/सी और नासिक ओसीआर 220 केवी डी/सी)
2.	दक्षिण ओलपाड (जीआईएस) - नासिक 765 केवी डी/सी लाइन (240 किमी)।	• 240 किमी ;(480 सीकेएम)
3.	दक्षिण ओलपाड - नासिक 765 केवी डी/सी लाइन के लिए दक्षिण ओलपाड (जीआईएस) एस/एस (सेक्शन-**II**) में दो 765 केवी लाइन बे।	• 765 केवी सेक्शन-।। के निर्माण के लिए 765 केवी सेक्शनलाइजर के 1 सेट के साथ 765 केवी लाइन बे- 2 (जीआईएस) (सेक्शन-।।)
4.	दक्षिण ओलपाड - नासिक 765 केवी डी/सी लाइन के दोनों छोरों के प्रत्येक सर्किट पर 765 केवी, 240 एमवीएआर स्विचेबल लाइन रिएक्टर	• 240 एमवीएआर, 765 केवी स्विचेबल लाइन रिएक्टर- 4 (दक्षिण ओलपाड छोर के लिए 2 और नासिक छोर के लिए 2) • 765 केवी स्विचेबल लाइन रिएक्टर बे- 4 (दक्षिण ओलपाड छोर के लिए 2 और नासिक छोर के लिए 2) • 240 एमवीआर स्विचेबल एलआर के लिए नासिक में 80 एमवीआर अतिरिक्त सिंगल-फेज रिएक्टर • 80 एमवीएआर स्पेयर सिंगल-फेज रिएक्टर साउथ ओलपाड एस/एस में पहले से ही उपलब्ध है और इसका उपयोग स्विचेबल एलआर के लिए किया जाएगा।
5.	नासिक-पिंपलगांव (एमएसईटीसीएल) 400 केवी डी/सी लाइन (क्वाड एसीएसआर/एएएसी/एएल59 मूस समतुल्य) (लाइन को सिनर टीपीपी / रेमंड अर्थात् नासिक के पूर्वी हिस्से के पास से रूट किया जाएगा)।...	80 किमी (160 किमी)
6.	नासिक-पिंपलगांव (एमएसईटीसीएल) 400 केवी लाइन (क्वाड एसीएसआर / एएएसी / एएल59 मूस समकक्ष) के लिए पिंपलगांव एस / एस में 400 केवी लाइन बे की संख्या 2	400 केवी लाइन बे - 2

टिप्पणी:

क) डेढ़ ब्रेकर स्कीम में व्यास (जीआईएस) को पूरा करने के लिए आवश्यक बे (जीआईएस) का भी टीएसपी द्वारा निष्पादन किया जाएगा।

ख) दक्षिण ओलपाड (जीआईएस) का टीएसपी, उपर्युक्त कार्यक्षेत्र के लिए स्थान (निःशुल्क) उपलब्ध कराएगा।

ग) एमएसईटीसीएल, पिंपलगांव एस/एस में उपर्युक्त कार्यक्षेत्र के लिए स्थान (निःशुल्क) उपलब्ध कराएगा।

घ) एमएसईटीसीएल, नासिक एस/एस से 220 केवी के लिए डाउनस्ट्रीम प्रणाली को नियत समय-सीमा में लागू करेगा।

7. लकाडिया (चरण-2: 7.5 गीगावाट), जाम खंभालिया (चरण-2: 5.5 गीगावाट) और जामनगर (चरण-1: 1 गीगावाट) से विद्युत निकासी के लिए सामान्य पारेषण प्रणाली- भाग- ग

संभावित कार्यान्वयन समयसीमा :36 महीने

बीपीसी :पावर फाइनेंस कॉपोरेशन लिमिटेड (पीएफसी)

कार्यक्षेत्र:

क्र.सं	**पारेषण स्कीम का कार्यक्षेत्र**	***क्षमता किमी /***
1.	2 x 330 एमवीएआर 765 केवी बस रिएक्टर और 2 x 125 एमवीएआर 400 केवी बस रिएक्टर के साथ 765/400 केवी, 2 x 1500 एमवीए और 400/220 केवी, 3x 500 एमवीए आलेफाटा एस/एस की स्थापना। [765 केवी और 400 केवी बस सेक्शनलाइज़र को सामान्य रूप से बंद रखा जाना चाहिए। ग्रिड स्थितियों के आधार पर खोला जा सकता है] **भावी प्रावधान (स्थान के लिए):** ➢ बे के साथ 765/400 केवी, 1500 एमवीए आईसीटी - 4 (सेक्शन-I पर 2 और सेक्शन-II पर 2) ➢ स्विचेबल लाइन रिएक्टर के साथ 765 केवी लाइन बे - 6 (सेक्शन-I पर 2 और सेक्शन-II पर 4) ➢ बे के साथ 765 केवी, 330 एमवीएआर बस रिएक्टर: 2 (सेक्शन-I पर 1 और सेक्शन-II पर 1) ➢ बे के साथ 400/220 केवी, 500 एमवीएआर आईसीटी - 7 (सेक्शन-I पर 2 1 और सेक्शन-II पर 5) ➢ स्विचेबल लाइन रिएक्टर के साथ 400 केवी लाइन बे - 10 (सेक्शन- I पर 4 और सेक्शन- II पर 6) + 400 केवी एचवीडीसी इंटरकनेक्शन के लिए 4 बे	• 765 / 400 केवी, 1500 एमवीए आईसीटी - 2 (7x500 एमवीए एकल चरण इकाइयां जिनमें एक अतिरिक्त आईसीटी इकाई शामिल है) (सेक्शन-I पर 1 और सेक्शन-II पर 1) • 400 / 220 केवी आईसीटी - 3 (सेक्शन-1 पर)। • 765 केवी आईसीटी बे - 2 • 400 केवी आईसीटी बे - 5 • 220 केवी आईसीटी बे - 3 • 765 केवी लाइन बे - 6 (4 सेक्शन-1 पर: नासिक डी / सी, पुणे (शिक्रापुर) और पडघे एस / सी और सेक्शन-2 पर2: पुणे (शिक्रापुर) और औरंगाबाद) • 1x330 एमवीएआर, 765 केवी बस रिएक्टर- 2 (7x110 एमवीएआर सिंगल फेज रिएक्टर सहित बस / लाइन रिएक्टर के लिए एक अतिरिक्त इकाई) (सेक्शन-I पर 1 पर और सेक्शन-II पर 1) • 765 केवी बस रिएक्टर बे - 2 • 220 केवी बीसी - 1 • 220 केवी टीबीसी - 1 • 125 एमवीएआर, 420 केवी रिएक्टर - 2 (सेक्शन-I पर1 और सेक्शन-II पर 1)। • 400 केवी रिएक्टर बे - 2 • 400 केवी लाइन बे - 2 (सेक्शन-I पर)।

	(प्रत्येक सेक्शन पर 2) ➢ बे के साथ 420 केवी, 125 एमवीएआर बस- 2 (सेक्शन-I पर 1 और सेक्शन-II पर 1) ➢ 220 केवी सेक्शनलाइजर बे: 1 सेट ➢ 220 केवी बीसी और टीबीसी - प्रत्येक 1 ➢ 220 केवी लाइन बे: सेक्शन-I पर 4 और सेक्शन-II पर 8 ➢ 400 केवी एचवीएसी स्विचयार्ड तथा सभी संबंधित उपकरणों (फिल्टर सहित)/बस एक्सटेंशन आदि सहित संबद्ध इंटरकनेक्शन (प्रत्येक 400 केवी बस सेक्शन पर 2x1500 मेगावाट पोल) के साथ-साथ 6000 मेगावाट, ± 800 केवी आलेफाटा (एचवीडीसी) [एलसीसी] टर्मिनल स्टेशन (4x1500 मेगावाट) की स्थापना।	• 220 केवी लाइन बे - 4 (एमएसईटीसीएल 220 केवी लाइनों के लिए: आलेफाटा (एम) 220 केवी डी / सी और ब्रिजस्टोन 220 केवी डी / सी) • 765 केवी सेक्शनलाइजर बे: 1 -सेट • 400 केवी सेक्शनलाइजर बे: 1 - सेट
2.	आलेफाटा - लोनिकंद-I 400 केवी डी/सी लाइन (क्वाड एसीएसआर/ एएएसी/एएल 59 मूस समतुल्य) (~70 किमी.)	70 **किमी** (140 **सीकेएम)**
3.	आलेफाटा - लोनिकंद-I 400 केवी डी/सी लाइन के लिए लोनिकंद-I (एमएसईटीसीएल) एस/एस में दो 400 केवी लाइन बे	400 **केवी लाइन बे** - 2
4.	आलेफाटा एस/एस पर औरंगाबाद- पुणे (शिक्रापुर) (जीआईएस) 765 केवी एस/सी लाइन एवं पादघे (जीआईएस) - पुणे (शिक्रापुर) (जीआईएस) 765 केवी एस/सी लाइन का लिलो (लिलो मार्ग की लंबाई ~ 20 किमी)	लिलो मार्ग की लंबाई - 20 किमी. (80 सीकेएम)
5.	नासिक - आलेफाटा 765 केवी डी/सी लाइन (~100 किमी.)	100 **किमी** (200 **सीकेएम)**
6.	नासिक में नासिक - आलेफाटा 765 केवी डी/सी लाइन के लिए दो 765 केवी बे	765 केवी लाइन बे -2

टिप्पणी-1:

क) नासिक एस/एस का टीएसपी, क्र.सं.-6 के रूप में उपर्युक्त कर्यक्षेत्र के लिए स्थान (निःशुल्क) उपलब्ध कराएगा।

ख) एमएसईटीसीएल, क्र.सं.-3 के रूप में उपर्युक्त कर्यक्षेत्र के लिए स्थान (निःशुल्क) उपलब्ध कराएगा।

ग) एमएसईटीसीएल, आलेफाटा एस/एस से 220 केवी डाउनस्ट्रीम प्रणाली को नियत समय-सीमा में लागू करेगा।

टिप्पणी-2:

क) पुणे (जीआईएस) - औरंगाबाद 765 केवी लाइन के पुणे (जीआईएस) छोर पर 240 एमवीएआर लाइन रिएक्टर पहले से ही स्विचेबल है। चूंकि आलेफाटा (पुणे (जीआईएस) - आलेफाटा) में एलआईएलओ के बाद लाइन की लंबाई कम हो जाएगी, इसलिए छोटी लाइन पर ओवरकॉम्पेनसेशन के कारण समानांतर अनुनाद की घटना से बचने के लिए एनजीआर बाईपासिंग के साथ-साथ इंटर ट्रिपिंग स्कीम को लागू करने की आवश्यकता होगी। एनजीआर बाईपास लाइन सेवा से बाहर होने पर स्विचेबल एलआर का उपयोग बस रिएक्टर के रूप में करने में भी मदद करता है। पावरग्रिड द्वारा दिनांक 02.12.2024 के ई-मेल द्वारा की गई पुष्टि के अनुसार, पुणे (जीआईएस) में 765 केवी पुणे (जीआईएस) - औरंगाबाद लाइन के 240 एमवीएआर लाइन रिएक्टर में एनजीआर बाईपास व्यवस्था उपलब्ध है। इसलिए, मुख्य लाइन ब्रेकर के साथ ट्रिप स्विचेबल एलआर को ट्रिप करने के लिए केवल इंटर ट्रिपिंग स्कीम को लिलो के कार्यान्वयन के बाद सक्षम करने की आवश्यकता होगी, जिसे टीएसपी द्वारा पावरग्रिड के समन्वय में सुनिश्चित किया जाएगा।।

लिलो के बाद, आलेफाटा - औरंगाबाद लाइन की लंबाई लगभग 190-200 किमी, आलेफाटा - पदघे: लगभग 140 किमी और आलेफाटा - पुणे (जीआईएस): लगभग 70 किमी होने की उम्मीद है। लंबाई अस्थायी है और इसमें बदलाव हो सकता है।

ख) आलेफाटा - पुणे (पश्चिम) 765 केवी डी/सी लाइन को एमएसईटीसीएल द्वारा वर्ष 2030 के लिए अपनी मास्टर स्कीम में प्रस्तावित किया गया है। आवश्यकतानुसार दोनों छोरों पर संबंधित बे के साथ एमएसईटीसीएल द्वारा इसे लागू किया जा सकता है। लाइन को एलेफाटा एस/एस के 765 केवी सेक्शन-II पर समाप्त किया जाएगा।

ग) विषय स्कीम के तहत टीएसपी द्वारा आलेफाटा - लोनिकंद-। 400 केवी डी/सी लाइन और इन-एसटीएस स्कीम के तहत एमएसईटीसीएल द्वारा पुणे (पूर्व) (कर्जत-।।) एस/एस - लोनिकंद-।। 400 केवी डी/सी लाइन के कार्यान्वयन के बाद, लोनिकंद-। और लोनिकंद-। के बीच 400 केवी इंटरकनेक्टर को सामान्य रूप से खुला रखा जा सकता है (फॉल्ट नियंत्रण के लिए) और ग्रिड संचालन की आवश्यकता के आधार पर बंद किया जा सकता है। उपर्युक्त लाइनों के पूरा होने के बाद टीएसपी एमएसईटीसीएल को संवेदनशील बनाएगा।

8. बोली प्रक्रिया समन्वयक की नियुक्ति, विद्युत मंत्रालय द्वारा इस संबंध में जारी और समयसमय पर संशोधित - दिशानिर्देशोंमें निर्धारित शर्तों के अध्यधीन होगी।

9. बीपीसी तकनीकी विकल्पों के माध्यम से मार्ग के अधिकार की चौड़ाई में कमी की गणना के लिए सीईए (आरओडब्ल्यू) कीसमिति की रिपोर्ट दिनांक 24.09.2024 के अनुसार आरओडब्ल्यू अनुकूलन सुनिश्चित करेंगे।

10. शहरीवन क्ष/शहरी-अर्ध/ेत्रों में मोनोपोल टॉवर संरचनाएं, इंसुलेटेड क्रॉस आर्म्स और अन्य रो कॉरिडोर अनुकूलन उपाय अपनाए जाएंगे।

11. जहां आरओडब्ल्यू की संभावना हैवहां , मोनोपोल टॉवर संरचनाओं का उपयोग किया जाएगा, जबकि लैटिस टावरों का उपयोग अन्य सेक्शन में किया जाएगा।

12. इसके अलावा, मार्ग को पीएम गति शक्ति पोर्टल पर सत्यापन और भौतिक सर्वेक्षण के बादही अंतिम रूप दिया जाना चाहिए।

[फा. सं. 34-15/3/2026- ट्रांस]

नोओरेम इंद्रकुमार सिंह, अवर सचिव (पारेषण)

MINISTRY OF POWER

NOTIFICATION

New Delhi, the 11th February, 2026

S.O. 725(E).— In exercise of the powers conferred by sub-para 3.2 of Para 3 of the Guidelines circulated under Section 63 of the Electricity Act, 2003 (No. 36 of 2003), the Central Government on the recommendations of 37th meeting of National Committee on Transmission, hereby notifies the following transmission schemes under TBCB mode, with details of respective Bid-Process Coordinator (BPC): -

1. Augmentation at Bhadla-III, Ramgarh PS and Kanpur (PG)

Tentative implementation timeframe: 20.01.2029

BPC: REC Power Development and Consultancy Limited

Scope:

Sl. No.	Scope of the Transmission Scheme	Item Description
1.	Augmentation of 400/220 kV, 5x500 MVA (6th to 10th) ICTs at 765/400/220kV Bhadla-III PS	• 500 MVA, 400/220 kV ICT - 5 nos. (4 nos. ICTs in 220kV Sec-2 (6th to 9th) and 1 no. ICT in 220kV Sec-1 (10th) • 400kV ICT bays – 5 nos. • 220 kV ICT bay – 4 nos. • 220 kV ICT (GIS) bay – 1 no. (for 10th ICT) • 220kV GIS bus duct/Cable for interconnection of 220 kV side of ICT (10th) to 220kV GIS bay (Section-1)
2.	Implementation of 5 nos. of 220kV line bays at 765/400/220kV Bhadla-III PS.	• 220kV line bay – 5 nos.
3.	Implementation of 1 no. of 400kV line bay at 765/400/220kV Bhadla-III PS.	• 400kV line bay – 1 no.
4.	Implementation of 2 sets 400kV sectionlizer bay at 765/400/220kV Bhadla-III PS	• 400kV sectionlizer bay – 2 sets
5.	Augmentation of 765/400 kV, 2x1500 MVA (3rd & 4th) ICTs at 765/400kV Ramgarh PS	• 1500 MVA, 765/400 kV ICT - 2 nos. • 765kV ICT bays – 2 nos. • 400 kV ICT bay – 2 nos.
6.	Augmentation of 400/220 kV, 2x500 MVA (3rd & 4th) ICTs at 765/400kV Ramgarh PS	• 500 MVA, 400/220 kV ICT - 2 nos. • 400kV ICT bays – 2 nos. • 220 kV ICT bay – 2 nos.
7.	Implementation of 2 nos. of 220kV line bays at 765/400kV Ramgarh PS	• 220kV line bay – 2 nos.
8.	Implementation of 1 no. of 400kV line bay at 765/400kV Ramgarh PS	• 400kV line bay – 1 no.
9.	Augmentation of 765/400 kV, 1x1500 MVA (3rd) ICT at 765/400kV Kanpur (PG) substation	• 1500 MVA(3x500MVA), 765/400 kV ICT - 1 no. • 765kV ICT bay (GIS) including completion of diameter. • 400 kV ICT bay (GIS) in existing spare bay • All associated GIS duct with terminations.

2. Transmission System for integration of Ananthpuram-III PS REZ Phase-I (3GW)

Tentative implementation timeframe: 30 Months

BPC: Power Finance Corporation Limited (PFC)

Scope:

Sl. No.	Scope of the Transmission Scheme	Capacity /km
1	Establishment of 3x1500 MVA, 765/400 kV and 7x500 MVA, 400/220kV Ananthapuram-III Pooling Station near Urvakonda / Beluguppa / Kalyandurg areas in Anantapur district along with 2x330 MVAr (765 kV) bus reactors at Ananthapuram-III PS with provision of two (2) sections of 4500 MVA each at 400kV level Future Space Provisions: • 765/400kV, 1500 MVA, ICTs – 3 Nos. • 765kV ICT bays – 3 Nos. • 400kV ICT bays – 3 Nos. • 400/220kV, 500 MVA, ICTs – 7 Nos. • 400kV ICT bays – 7 Nos. • 220kV ICT bays – 7 Nos. • 765kV line bays – 12 Nos. (with provision for SLR) • 400kV line bays – 11 Nos. (with provision for SLR) • 220kV line bays – 15 Nos. • 220kV Bus Sectionalizer : 2 sets • 220 kV Bus Coupler (BC) Bay – 2 nos. • 220 kV Transfer Bus Coupler (TBC) Bay – 2 nos. • 400kV Bus Sectionalizer : 1 set	• 765/400kV, 1500 MVA, ICTs – 3 Nos. (10x500 MVA incl. 1 spare unit) • 765kV ICT bays – 3 Nos. • 400kV ICT bays – 3 Nos. • 765kV line bays – 2 Nos. (at Ananthapuram-III PS for termination of Ananthapuram-III – Krishnagiri 765kV D/c line) • 765 kV, 330 MVAr Bus Reactor – 2 Nos. (7x110 MVAr inc. 1 switchable spare unit for both bus reactor and line reactor) • 765 kV Bus Reactor bays – 2 Nos. • 400/220kV, 500 MVA, ICTs – 7 Nos. • 400kV ICT bays – 7 Nos. • 220kV ICT bays – 7 Nos. • 220kV line bays – 10 Nos. • 220kV Bus Sectionalizer: 1 set • 220 kV Bus Coupler (BC) Bay – 2 Nos. 220 kV Transfer Bus Coupler (TBC) Bay – 2 Nos.
2	± 300 MVAr STATCOM at Ananthapuram-III PS	• 400kV bay – 1 no. • ± 300 MVAr STATCOM – 1 set
3	Ananthapuram-III – Krishnagiri 765 kV D/c line with 240 MVAr SLR (convertible) at Ananthapuram-III end on both circuits	~ 140 km • 765 kV line bays – 2 Nos. (at Krishnagiri) • 765 kV, 240 MVAr SLR at Ananthapuram-III PS – 2 Nos. (7x80 MVAr inc. 1 switchable spare unit) Switching Equipment for 765 kV SLR at Ananthapuram-III PS – 2 Nos.

3. Transmission system for Integration of Power from RE Projects in Jam Khambhaliya REZ in Gujarat - Phase II (5500MW) and Jamnagar Phase-I (1000 MW)

Tentative implementation timeframe: 31.03.2030

BPC: Power Finance Corporation Limited (PFC)

Scope:

Sl. No.	Scope of the Transmission Scheme	Capacity /km
1.	Establishment 4x1500 MVA, 765/400 kV & 10x500MVA, 400/220kV Substation near Kalyanpur (GIS) with 2x330 MVAR, 765 kV bus reactor and 2x125 MVAR, 420 kV bus reactor **Future provision (space for):** ➢ 765/400 kV, 1500MVA ICT along with bays- 2 Nos. (on Sec-II) ➢ 765 kV line bays along with switchable line reactors – 8 Nos. (4 Nos. on Sec-I & 4 Nos. on Sec-II) ➢ 765 kV, 330MVAr Bus Reactor	• 765/400 kV, 1500 MVA ICT – 4 Nos. (13x500 MVA single phase units including one spare ICT Unit) (3 on Sec-I & 1 on Sec-II) • 400/220kV, 500MVA ICT – 10 Nos. (5 on Sec-I & 5 on Sec-II) • 765 kV ICT bays – 4 Nos. • 400 kV ICT bays – 14 Nos. • 220kV ICT bays – 10 Nos. • 765 kV Line bays – 4 Nos. (2 on Sec-I & 2 on

	along with bay: 2 Nos. (1 on Sec-I & 1 on Sec-II) ➢ 400 kV line bays along with switchable line reactors– 12 Nos. *(4 Nos. on Sec-I & 8 Nos. on Sec-II)* ➢ 420 kV, 125MVAr Bus Reactor along with bays: 2 Nos. (1 on Sec-I & 1 on Sec-II) ➢ 220 kV line bays: 3 No. on Sec-I & 3 Nos. on Section-II ➢ Establishment of 6000 MW, ± 800 kV Kalyanpur (GIS) (HVDC) [LCC] terminal station (4x1500 MW) along with associated interconnections with 400 kV HVAC Switchyard & all associated equipment (incl. filters)/bus extension, etc. (2x1500MW Poles on each 400kV bus section) ➢ ±400MVAr STATCOM with 400kV bay – 2 No. (1 on Sec-I & 1 on Sec-II)	Sec-II) • 765 kV Sectionaliser bay: 1 -set • 400 kV Sectionalization bay: 1- set • 220 kV Sectionalization bay: 1 set • 1x330 MVAr, 765 kV bus reactor- 2 Nos. (7x110 MVAR single phase Reactors including one spare Unit for bus /line reactors) (1 on Sec-I & 1 on Sec-II) • 765 kV Bus reactor bay – 2 Nos. • 125 MVAr, 420 kV reactor- 2 Nos. (1 on Sec-I & 1 on Sec-II) • 400 kV Reactor bay- 2 Nos. • 220kV BC Bay-2 No. • 400 kV line bay – 1 No. (for interconnection of RE Project at Sec-I) • 220kV line bays – 12 Nos. (for interconnection of RE Projects, 6 on Sec-I & 6 on Sec-II)
2.	Kalyanpur (GIS) – Jamnagar (GIS) 765 kV D/c line	95 km
3.	2 Nos. 765 kV line bays at Jamnagar (GIS) S/s	765 kV line bays – 2 Nos. (GIS)
4.	Kalyanpur (GIS) – Saurashtra (near Rajkot) (GETCO) 765 kV D/c line	225km.
5.	330MVAr Switchable line reactors on each circuit at Kalyanpur (GIS) end of Kalyanpur (GIS) – Saurashtra (near Rajkot) (GETCO) 765 kV D/c line (with NGR bypass arrangement)	• 330 MVAr, 765 kV switchable line reactor- 2 Nos. • Switching equipment for 765 kV line reactor- 2 Nos.
6.	2 Nos. 765 kV line bays at Saurashtra (near Rajkot) (GETCO) S/s	• 765 kV line bays – 2 Nos.
7.	Installation of Synchronous Condenser (+300/-200MVAr) (Minimum) & Short circuit contribution at PCC of 1200MVA (Minimum) at Kalyanpur (GIS)– 2 Nos. Value of Inertia (MW-s) shall be defined in RfP document.	• Synchronous Condenser along with associated 400kV Bay-2 Nos. (one on each Sec-I & II)
8.	Creation of 220kV switchyard along with Installation of 3x500MVA, 400/220kV ICTs at Jamnagar (GIS) S/s	• Creation of 220kV Bus Section-I • 220kV BC Bay – 1 No. • 400/220 kV, 500 MVA ICT – 3 Nos. (on 400kV & 220kV Sec-I) • 400 kV ICT bays – 1 No. (*2 Nos. ICTs to be terminated in 2 nos. GIS bays being implemented as part of Diameter completion at Jamnagar S/s under "Network Expansion scheme in Gujarat for drawl of about 3.6 GW load under Phase-I in Jamnagar area" scheme)* • 220kV ICT bays – 3 Nos.
9.	4 nos. 220kV line bays for RE interconnection	220kV line bays – 4 Nos.

Note:

➢ *TSP of Jamnagar S/s shall provide space for above scope of work at Sl. 3, 8 & 9 on free of cost*

basis

- *GETCO shall provide space for above scope of work at Sl. 6 on free of cost basis*
- *Bay(s) required for completion of diameter (GIS) in one-and-half breaker scheme shall also be executed by the TSP.*
- *Above Syncons (at Sl. 7) shall be considered as 'transmission asset' similar to STATCOM & SVC for its tariff mechanism.*

4. . Transmission system for Integration of Power from RE Projects in Lakadia REZ in Gujarat-Phase II (7500MW)

Tentative implementation timeframe: 36 Months

BPC: REC Power Development and Consultancy Limited

Scope:

Sl. No.	Scope of the Transmission Scheme	Capacity /km
1.	**Establishment of 765/400 kV, 6x1500MVA & 10x500MVA, 400/220kV Lakadia-II (Near Chitrod)** with 2x330 MVAR 765kV bus reactor and 2x125 MVAR 400kV bus reactor. *[765kV, 400kV & 220kV levels to be established in two sections with Sectionaliser arrangement.* ***The 220kV Sectionaliser shall be kept normally open and may be closed under contingency condition. The 400kV and 765kV Sectionaliser shall be kept normally closed. The bus operation may be reviewed after proposed HVDC implementation as per requirement of Grid operator.*** *(3x1500MVA 765/400kV ICTs, 5x500MVA 400/220kV ICTs, 1x330MVA 765kV BR & 1x125MVAr 420kV BR shall be on Sec-I & 3x1500MVA 765/400kV ICTs, 5x500MVA 400/220kV ICTs, 1x330MVA 765kV BR & 1x125MVAr 420kV BR shall be on Sec-II)]* **Future provision (space for):** ➢ 765 kV line bays along with switchable line reactors – 6 Nos. (2 Nos. on Sec-I & 4 Nos. on Sec-II) ➢ 765 kV Bus Reactor along with bay: 2 Nos. (1 on Sec-I & 1 on Sec-II) ➢ 400 kV line bays along with switchable line reactors– 7 Nos. *(3 on Sec-I & 4 on Sec-II) + 4 Nos. 400kV bays (2 nos. on each section) for HVDC Interconnection* ➢ 420 kV, 125MVAr Bus Reactor along with bays: 2 Nos. (1 on Sec-I & 1 on Sec-II) ➢ 220 kV line bays: 2 No. on Sec-I & 1 Nos. on Section-II ➢ Establishment of 6000 MW, ± 800 kV Lakadia-II (HVDC) [LCC] terminal station (4x1500 MW) along with associated interconnections with 400 kV HVAC Switchyard & all associated equipment (incl. filters)/bus extension, etc. (2x1500MW poles on each 400kV section)	• 765/400 kV, 1500 MVA ICT – 6 Nos. (19x500 MVA single phase units including one spare ICT Unit) • 400/220 kV ICTs - 10 Nos. (5 on Sec-I & 5 on Sec-II) • 765 kV ICT bays – 6 Nos. • 400 kV ICT bays – 16 Nos. • 220kV ICT bays – 10 Nos. • 1x330 MVAr, 765 kV bus reactor- 2 Nos. (7x110 MVAR single phase Reactors including one spare Unit for bus /line reactor) (1 on Sec-I & 1 on Sec-II) • 765 kV Bus reactor bay – 2 Nos. • 765kV line bays: 8 nos. (4 Nos. on Sec-I (2 for Halvad D/c & 2 for Ahmedabad D/c) and 4 Nos. on Sec-II (2 for Kandla D/c and 2 for Vataman)) • 765 kV Sectionaliser bay: 1 -set • 400 kV Sectionaliser bay: 1- set • 220 kV Sectionaliser bay: 1- set • 220kV BC– 2 No. • 220kV TBC – 2 No. • 125 MVAr, 420 kV reactor- 2 Nos. (1 on Sec-I & 1 on Sec-II) • 400 kV Reactor bay- 2 Nos. • 400 kV line bays - 3 Nos. (2 nos. on Section-I & 1 No. on Sec-II for interconnection of RE Projects) • 220 kV line bays - 15 Nos. (7 nos. on Sec-I & 8 nos. on Sec-II for interconnection of RE Projects)

	➢ Synchronous Condenser (+300/-200MVAr) along with 400kV bay – 2 Nos. (1 on Sec-I & 1 on Sec-II)	
2.	Installation of Synchronous Condenser (+300/-200MVAr) (Minimum) & Short circuit contribution at PCC of 1200MVA (Minimum) at Lakadia-II – 2 Nos. Value of Inertia (MW-s) shall be defined in RfP document.	Synchronous Condenser along with associated 400kV Bay-2 Nos. (one each on Sec-I & II)
3.	LILO of Halvad – Kandla 765kV D/c line at Lakadia-II	LILO route length ~22km. (88ckm)
4.	Lakadia-II – Ahmedabad 765kV D/c line	190 km (380 ckm)
5	2 Nos. 765 kV line bays at Ahmedabad S/s for Lakadia-II – Ahmedabad 765kV D/c line	765 kV line bays – 2 Nos. (AIS)
6	765kV, 330MVAr Switchable line reactors on each circuit at Ahmedabad end of Lakadia-II – Ahmedabad 765kV D/c line	• 330 MVAr, 765 kV switchable line reactor- 2 Nos. • 765 kV Switchable Line Reactor Bay - 2 Nos. • 110MVAr spare single phase reactor at Ahmedabad S/s is already available and same shall be used for subject Sw LR.
7	Lakadia-II – Vataman 765kV D/c line (220km.)	220 km (440 ckm)
8	2 Nos. 765 kV line bays at Vataman S/s for Lakadia-II – Vataman 765kV D/c line	765 kV line bays – 2 Nos. (AIS)
9	765kV, 240MVAr Switchable line reactors on each circuit at both ends of Lakadia-II – Vataman 765kV D/c line	• 240 MVAr, 765 kV switchable line reactor- 4 Nos. (2 for Lakadia-II end and 2 for Vataman end) • 765 kV switchable Line Reactor Bay - 4 Nos (2 for Lakadia-II end and 2 for Vataman end) • 80MVAr spare single-phase reactor at Lakadia-II for above 240MVAr Sw LR. • 80MVAr spare single-phase reactor at Vataman S/s is already available and same shall be used for subject Sw LR.

Note:

➢ *TSPs of Ahmedabad S/s & Vataman S/s to provide space for above scope of work in their respective substations (free of cost)*

➢ *Above Syncons (at Sl. No. 2) shall be considered as 'transmission asset' similar to STATCOM & SVC for its tariff mechanism.*

5. Common Transmission System for evacuation of power from Lakadia (Phase-II: 7.5GW), Jam Khambhaliya (Phase-II: 5.5GW) and Jamnagar (Phase-I: 1GW) - Part-A

Tentative implementation timeframe: 36 Months

BPC: Power Finance Corporation Limited (PFC)

Scope:

Sl. No.	*Scope of the Transmission Scheme*	*Capacity /km*
1.	Augmentation of transformation capacity at South Olpad (GIS) S/s by 1x1500MVA, 765/400kV (3rd) ICT	• 765/400 kV, 1500 MVA ICT – 1 No. • 765 kV ICT bays – 1 No. (GIS) (Being constructed as a part of diameter completion under Khavda Ph-IV Part-C Scheme) • 400 kV ICT bays – 1 No. (GIS)
2.	Vadodara(GIS) – Halvad 765kV D/c line to be	250 km (500 ckm)

	terminated into Lakadia – Halvad 765kV D/c line (near Halvad S/s) so as to form Lakadia – Vadodara (GIS) 765kV D/c line	*(Length of complete Lakadia – Vadodara (GIS) 765kV D/c line after implementation of above line section between Vadodara and Halvad is expected to be around 350km.)*
3.	765kV line bays at Vadodara (GIS) end for termination of Lakadia – Vadodara 765kV D/c line (formed as per details above at Sl. 2)	• 765kV line bays – 2 nos. (GIS) (being constructed as a part of diameter completion under ***"Transmission System for Evacuation of Power from potential renewable energy zone in Khavda area of Gujarat under Phase-IV (7 GW): Part B"***. Line side equipment for termination of the line at these bays to be implemented under the subject transmission scheme)
4.	765kV, 240MVAr Switchable line reactors on each circuit at Vadodara (GIS) end of Lakadia – Vadodara (GIS) 765kV D/c line (formed as per details above at Sl. 2)	• 240 MVAr, 765 kV switchable line reactor- 2 Nos. • 765 kV switchable Line Reactor Bay- 2 Nos. (being constructed as a part of diameter completion under ***"Transmission System for Evacuation of Power from potential renewable energy zone in Khavda area of Gujarat under Phase-IV (7 GW): Part B"***) • 80MVAr, 1-Ph spare reactor at Vadodara S/s is already available and same shall be utilized for subject switchable LR.
5.	765kV, 330MVAr Switchable Mid-point reactors at the bypass point at Halvad Switching Station on Lakadia – Vadodara (GIS) 765kV D/c line *(refer Note **d**)*	• 330 MVAr, 765 kV switchable line reactor- 2 Nos. • 765 kV switchable Line Reactor Bay - 2 Nos. • 110MVAr spare single phase reactor at bypass point near Halvad S/s

Note:

a) Bay(s) required for completion of diameter (GIS) in one-and-half breaker scheme shall also be executed by the TSP.

b) TSP of South Olpad S/s to provide space for above scope of work as Sl. 1 (Free of cost)

c) TSP of Vadodara (GIS) to provide space for above scope of work as Sl. 3 & 4 (Free of cost)

*d) As the provision for 765kV, 330MVAr switchable mid-point reactor at the bypass point at Halvad Switching Station on Lakadia – Vadodara (GIS) 765kV D/c line was not envisaged while allocating space for future scope at Halvad Switching Station under the **"Transmission Scheme for evacuation of additional 7GWE of RE power from Khavda RE Park under Phase III Part A"** project (under implementation by Halvad Transmission Ltd-AESL), the reactor shall be installed at Halvad Switching Station by utilizing the space reserved for other transmission elements, which will be specified in the RfP document.*

6. Common Transmission System for evacuation of power from Lakadia (Phase-II: 7.5GW), Jam Khambhaliya (Phase-II: 5.5GW) and Jamnagar (Phase-I: 1GW) - Part-B

Tentative implementation timeframe: 36 Months

BPC: REC Power Development and Consultancy Limited

Scope:

Sl. No.	*Scope of the Transmission Scheme*	*Capacity /km*
1.	**Establishment of 765/400 kV, 3x1500MVA & 400/220kV, 3x500MVA Nasik S/s (towards South of Nasik)** with 2x330 MVAR 765kV bus reactor and 2x125 MVAR 400kV bus reactor. **Future provision (space for):**	• 765/400 kV, 1500 MVA ICT – 3 Nos. (10x500 MVA single phase units including one spare ICT Unit) • 400/220 kV ICTs - 3 Nos.

	➢ 765/400 kV, 1500MVA ICT along with bays- 3 Nos. (on Sec-II) ➢ 765 kV line bays along with switchable line reactors – 10 Nos. (4 Nos. on Sec-I & 6 Nos. on Sec-II) ➢ 765 kV, 330MVAr Bus Reactor along with bay: 2 Nos. (on Sec-II) ➢ 765 kV Sectionaliser bay: 1 -set ➢ 400 kV Sectionaliser bay: 1- set ➢ 400/220 kV, 500MVA ICT along with bays - 7 Nos. (2 on Sec-I & 5 on Sec-II) ➢ 400 kV line bays along with switchable line reactors– 10 Nos. *(4 on Sec-I & 6 on Sec-II)* ➢ 420 kV, 125MVAr Bus Reactor along with bays: 2 Nos. (on Sec-II) ➢ 220 kV Sectionaliser bay: 1- set ➢ 220kV BC & TBC – 1 No. each ➢ 220 kV line bays: 2 No. on Sec-I & 8 Nos. on Section-II	• 765 kV ICT bays – 3 Nos. • 400 kV ICT bays –6 Nos. • 220kV ICT bays – 3 Nos. • 765 kV Line bays – 2 Nos. • 1x330 MVAr, 765 kV bus reactor- 2 Nos. (7x110 MVAR single phase Reactors including one spare Unit for bus /line reactor) • 765 kV Bus reactor bay – 2 Nos. • 220kV BC– 1 No. • 220kV TBC – 1 No. • 125 MVAr, 420 kV reactor- 2 Nos. • 400 kV Reactor bay- 2 Nos. • 400 kV line bays - 2 Nos. • 220 kV line bays - 6 Nos. (for MSETCL 220kV lines: Adwadi 220kV D/c, Nasik GCR 220kV D/c & Nasik OCR 220kV D/c)
2.	South Olpad (GIS) – Nasik 765kV D/c line (240km.)	• 240 km (480 ckm)
3.	2 Nos. 765 kV line bays at South Olpad (GIS) S/s (Sec-II) for South Olpad – Nasik 765kV D/c line	• 765 kV line bays – 2 Nos. (GIS) (Sec-II) along with 1 Set of 765kV sectionaliser so as to establish 765kV Sec-II.
4.	765kV, 240MVAr Switchable line reactors on each circuit at both ends of South Olpad – Nasik 765kV D/c line	• 240 MVAr, 765 kV switchable line reactor- 4 Nos. (2 for South Olpad end and 2 for Nasik end) • 765 kV switchable Line Reactor Bay - 4 Nos. (2 for South Olpad end and 2 for Nasik end) • 80MVAr spare single-phase reactor at Nasik for above 240MVAr switchable LR. • 80MVAr spare single-phase reactor at South Olpad S/s is already available and same shall be used for subject switchable LR.
5.	Nasik – Pimpalgaon (MSETCL) 400kV D/c line (Quad ACSR/AAAC/AL59 moose equivalent) *(Line to be routed from near Sinner TPP / Raymond i.e. from eastern side of Nasik).*	80km. (160ckm)
6.	2 Nos. 400 kV line bays at Pimpalgaon S/s for Nasik – Pimpalgaon (MSETCL) 400kV D/c line (Quad ACSR/AAAC/AL59 moose equivalent)	400 kV line bays – 2 Nos.

Note:

a) *Bay(s) required for completion of diameter (GIS) in one-and-half breaker scheme shall also be executed by the TSP.*

b) *TSP of South Olpad(GIS) to provide space for above scope of work (Free of cost)*

c) MSETCL to provide space for above scope of work at Pimpalgaon S/s (Free of cost)

d) MSETCL to implement 220kV downstream system from Nasik S/s in matching time-frame.

7. Common Transmission System for evacuation of power from Lakadia (Phase-II: 7.5GW), Jam Khambhaliya (Phase-II: 5.5GW) and Jamnagar (Phase-I: 1GW) - Part-C

Tentative implementation timeframe: 36 Months

BPC: Power Finance Corporation Limited (PFC)

Sl. No.	*Scope of the Transmission Scheme*	*Capacity /km*
1.	Establishment of 765/400 kV, 2x1500MVA & 400/220kV, 3x500MVA Alephata **S/s** with 2x330 MVAR 765kV bus reactor and 2x125 MVAR 400kV bus reactor. [765kV & 400kV Bus sectionalisers to be kept normally closed. May be opened based on Grid conditions] **Future provision (space for):** ➢ 765/400 kV, 1500MVA ICT along with bays- 4 Nos. (2 on Sec-I & 2 on Sec-II) ➢ 765 kV line bays along with switchable line reactors – 6 Nos. (2 Nos. on Sec-I & 4 Nos. on Sec-II) ➢ 765 kV, 330MVAr Bus Reactor along with bay: 2 Nos. (1 on Sec-I & 1 on Sec-II) ➢ 400/220 kV, 500MVA ICT along with bays - 7 Nos. (2 on Sec-I & 5 on Sec-II) ➢ 400 kV line bays along with switchable line reactors– 10 Nos. *(4 on Sec-I & 6 on Sec-II) + 4 nos. 400kV bays (2 nos. on each section) for HVDC Interconnection* ➢ 420 kV, 125MVAr Bus Reactor along with bays: 2 Nos. (1 on Sec-I & 1 on Sec-II) ➢ 220 kV Sectionaliser bay: 1- set ➢ 220kV BC & TBC – 1 No. each ➢ 220 kV line bays: 4 No. on Sec-I & 8 Nos. on Section-II ➢ Establishment of 6000 MW, ± 800 kV Alephata (HVDC) [LCC] terminal station (4x1500 MW) along with associated interconnections with 400 kV HVAC Switchyard & all associated equipment (incl. filters)/bus extension, etc. (2x1500MW poles on each 400kV section)	• 765/400 kV, 1500 MVA ICT – 2 Nos. (7x500 MVA single phase units including one spare ICT Unit) (1 on Sec-I & 1 on Sec-II) • 400/220 kV ICTs - 3 Nos. (on Sec-I) • 765 kV ICT bays – 2 Nos. • 400 kV ICT bays –5 Nos. • 220kV ICT bays – 3 Nos. • 765 kV Line bays – 6 Nos. (4 on Sec-I: Nasik D/c, Pune (Shikrapur) & Padghe S/c & 2 on Sec-II: Pune (Shikrapur) & Aurangabad) • 1x330 MVAr, 765 kV bus reactor- 2 Nos. (7x110 MVAR single phase Reactors including one spare Unit for bus /line reactor) (1 on Sec-I & 1 on Sec-II) • 765 kV Bus reactor bay – 2 Nos. • 220kV BC– 1 No. • 220kV TBC – 1 No. • 125 MVAr, 420 kV reactor- 2 Nos. (1 on Sec-I & 1 on Sec-II) • 400 kV Reactor bay- 2 Nos. • 400 kV line bays - 2 Nos. (on Sec-I) • 220 kV line bays - 4 Nos. (for MSETCL 220kV lines: Alephata(M) 220kV D/c & Bridgestone 220kV D/c) • 765 kV Sectionaliser bay: 1 -set • 400 kV Sectionaliser bay: 1- set
2.	Alephata – Lonikand-I 400kV D/c line (Quad ACSR/AAAC/AL59 moose equivalent) (~70km.)	70 km (140 ckm)
3.	2 Nos. 400 kV line bays at Lonikand-I (MSETCL) S/s for Alephata – Lonikand-I 400kV D/c line	400 kV line bays – 2 Nos.
4.	LILO of Aurangabad – Pune (Shikrapur) (GIS) 765kV S/c line and Padghe (GIS) – Pune (Shikrapur) (GIS) 765kV S/c line at Alephata S/s (LILO route length ~ 20km.)	LILO route length – 20 km. (80ckm)
5.	Nasik – Alephata 765kV D/c line (~100km.)	100 km (200 ckm)
6.	2 Nos. 765kV bays at Nasik for Nasik – Alephata 765kV D/c line	765 kV Line bays – 2 Nos.

Note-1:

a) *TSP of Nasik S/s to provide space for above scope of work as Sl. 6 (Free of cost)*

b) *MSETCL to provide space for above scope of work as Sl. 3 (Free of cost)*

c) *MSETCL to implement 220kV downstream system from Alephata S/s in matching time-frame.*

Note-2:

a) *240MVAr line reactor at Pune(GIS) end of Pune(GIS) – Aurangabad 765kV line is already switchable. Since length of the line will reduce after the LILO at Alephata (Pune(GIS) – Alephata), NGR Bypassing along with Inter tripping scheme would need to be implemented to avoid parallel resonance phenomena due to overcompensation on the short line. NGR bypassing also helps in utilization of switchable LR as Bus Reactor when line is out of service. As confirmed by POWERGRID vide e-mail dated 02.12.2024, NGR bypass arrangement in 240MVAr line reactor at Pune(GIS) end of 765kV Pune(GIS) – Aurangabad line is available. Hence, only Inter tripping scheme to trip switchable LR along with main line breaker would need to be enabled after implementation of LILO, which shall be ensured by TSP in coordination with POWERGRID.*

After the LILO, Alephata – Aurangabad line length is expected to be ~190-200km, Alephata – Padghe: ~140km. & Alephata – Pune(GIS): ~70km. The lengths are tentative and subject to change.

b) *Alephata – Pune(West) 765kV D/c line has been proposed by MSETCL it its master plan for 2030. Same may be implemented by MSETCL along with associated bays at both ends as per requirement. Line shall be terminated at 765kV Sec-II of Alephata S/s.*

c) *After implementation of Alephata – Lonikand-I 400kV D/c line by TSP under subject scheme and Pune(East)(Karjat-II) S/s – Lonikand-II 400kV D/c line by MSETCL under In-STS scheme, 400kV interconnector between Lonikand-I and Lonikand-II may be kept normally open (for fault level control) and may be closed based on requirement of Grid Operation. TSP to sensitize MSETCL after completion of above lines.*

8. The appointment of the Bid Process Coordinator is subject to the conditions laid down in the Guidelines issued by Ministry of Power in this regard, amended from time to time.

9. BPCs shall ensure RoW optimization as per the CEA's Committee report dated 24.09.2024 for calculation of reduction of Right of Way (RoW) Width through Technological Options.

10. Monopole tower structures, insulated cross arms and other RoW corridor optimization measures to be adopted in urban/ semi-urban /forest areas.

11. Monopole tower structures to be used where RoW issues are anticipated, while lattice towers shall be used in other sections.

12. Further, the route must be finalised after validation on PM Gati Shakti portal and physical survey.

[F. No. 34-15/3/2026-Trans]

NAOREM INDRAKUMAR SINGH. Under Secy. (Transmission)

Uploaded by Dte. of Printing at Government of India Press, Ring Road, Mayapuri, New Delhi-110064
and Published by the Controller of Publications, Delhi-110054.

GORAKHA NATH YADAVA Digitally signed by GORAKHA NATH YADAVA Date: 2026.02.19 18:21:13 +05'30'

Hemant Singh Digitally signed by Hemant Singh Date: 2026.10.21 23:17:38 +05'30'

SINGLE STAGE REQUEST FOR PROPOSAL DOCUMENT

FOR

SELECTION OF BIDDER AS TRANSMISSION SERVICE PROVIDER THROUGH TARIFF BASED COMPETITIVE BIDDING PROCESS

TO

ESTABLISH INTER-STATE TRANSMISSION SYSTEM

FOR

COMMON TRANSMISSION SYSTEM FOR EVACUATION OF POWER FROM LAKADIA (PHASE-II: 7.5GW), JAM KHAMBHALIYA (PHASE-II: 5.5GW) AND JAMNAGAR (PHASE-I: 1GW) - PART-B

ISSUED BY

REC Power Development and Consultancy Limited
(A wholly owned subsidiary of REC Limited)

Registered Office:
Core-4, SCOPE Complex,
7, Lodhi Road, New Delhi – 110 003
Email: vijay.kulkarni@recpdcl.in & tbcb@recpdcl.in

04.05.2026

REC Power Development and Consultancy Limited
(A wholly owned subsidiary of REC Limited)
Core-4, SCOPE Complex,
7, Lodhi Road, New Delhi – 110 003

Request for Proposal Document for selection of Bidder as Transmission Service Provider through tariff based competitive bidding process to establish Inter-State Transmission system for "Common Transmission System for evacuation of power from Lakadia (Phase-II: 7.5GW), Jam Khambhaliya (Phase-II: 5.5GW) and Jamnagar (Phase-I: 1GW) - Part-B" is issued by REC Power Development and Consultancy Limited.

This RFP document is issued to -

M/s. _____

_____

_____

_____

_____

Chief Executive Officer,
REC Power Development and Consultancy Limited
(A wholly owned subsidiary of REC Limited)

Email: …….

Place: ……

Date: ……

Signature: ……

REQUEST FOR PROPOSAL NOTIFICATION

REC Power Development and Consultancy Limited
(A wholly owned subsidiary of REC Limited)
Core-4, SCOPE Complex,
7, Lodhi Road, New Delhi – 110 003

1. Ministry of Power, Government of India vide its Gazette Notification No CG-DL-E-19022026-270309 dated 12.02.2026 has notified REC Power Development and Consultancy Limited (RECPDCL) to be the Bid Process Coordinator (BPC) for the purpose of Selection of Bidder as Transmission Service Provider to establish Inter-State transmission system i.e., **"Common Transmission System for evacuation of power from Lakadia (Phase-II: 7.5 GW), Jam Khambhaliya (Phase-II: 5.5GW) And Jamnagar (Phase-I: 1GW): Part-B"** through tariff based competitive bidding process.

2. REC Power Development and Consultancy Limited (hereinafter referred to as BPC) hereby invites all prospective Bidders for issue of Request for Proposal (RFP) for selection of Bidder as Transmission Service Provider (TSP) on the basis of international competitive bidding in accordance with the "Tariff Based Competitive Bidding Guidelines for Transmission Service" and "Guidelines for Encouraging Competition in Development of Transmission Projects" issued by Government of India, Ministry of Power under section – 63 of The Electricity Act, 2003 and as amended from time to time. The responsibility of the TSP would be to establish Inter-State Transmission system –**"Common Transmission System for evacuation of power from Lakadia (Phase-II: 7.5GW), Jam Khambhaliya (Phase-II: 5.5GW) and Jamnagar (Phase-I: 1GW) - Part-B"** (hereinafter referred to as 'Project') on build, own, operate & transfer basis and to provide transmission service:

Sl. No.	Scope of the Transmission Scheme	Scheduled COD in months from Effective Date
1.	Establishment of 765/400 kV, 3x1500 MVA & 400/220 kV, 3x500 MVA Nasik S/s (towards South of Nasik) with 2x330 MVAr 765 kV bus reactor and 2x125 MVAr 400 kV bus reactor. • 765/400 kV, 1500 MVA ICT – 3 Nos. (10x500 MVA single phase units including one spare ICT Unit) • 400/220 kV ICTs - 3 Nos. • 765 kV ICT bays – 3 Nos. • 400 kV ICT bays –6 Nos. • 220 kV ICT bays – 3 Nos. • 765 kV Line bays – 2 Nos. • 1x330 MVAr, 765 kV bus reactor- 2 Nos. (7x110 MVAr single phase Reactors including one spare Unit for bus /line reactor) • 765 kV Bus reactor bay – 2 Nos. • 220 kV BC– 1 No. • 220 kV TBC – 1 No. • 125 MVAr, 420 kV Bus Reactor- 2 Nos. • 400 kV Bus Reactor bay- 2 Nos.	36 months

	• 400 kV line bays - 2 Nos. • 220 kV line bays - 6 Nos. (for MSETCL 220 kV lines: Adwadi 220 kV D/C, Nasik GCR 220 kV D/C & Nasik OCR 220 kV D/C) **Future provision (space for):** • 765/400 kV, 1500 MVA ICT along with bays- 3 Nos. (on Sec-II) • 765 kV line bays along with switchable line reactors – 10 Nos. (4 Nos. on Sec-I & 6 Nos. on Sec-II) • 765 kV, 330 MVAr Bus Reactor along with bay: 2 Nos. (on Sec-II) • 765 kV Sectionaliser bay: 1 -set • 400 kV Sectionaliser bay: 1- set • 400/220 kV, 500 MVA ICT along with bays - 7 Nos. (2 on Sec-I & 5 on Sec-II) • 400 kV line bays along with Switchable Line Reactors– 10 Nos. (4 on Sec-I & 6 on Sec-II) • 420 kV, 125 MVAr Bus Reactor along with bays: 2 Nos. (on Sec-II) • 220 kV Sectionaliser bay: 1- set • 220 kV BC & TBC – 1 No. each • 220 kV line bays: 2 No. on Sec-I & 8 Nos. on Section-II	
2.	South Olpad (GIS) – Nasik 765 kV D/C line	
3.	2 Nos. 765 kV line bays at South Olpad (GIS) S/s (Sec-II) for South Olpad – Nasik 765 kV D/C line • 765 kV line bays – 2 Nos. (GIS) (Sec-II) along with 1 set of 765 kV sectionaliser bay so as to establish 765 kV Sec-II.	
4.	765 kV, 240 MVAr Switchable line reactors on each circuit at both ends of South Olpad – Nasik 765kV D/C line • 240 MVAr, 765 kV Switchable Line Reactor- 4 Nos. (2 for South Olpad end and 2 for Nasik end) • 765 kV Switchable Line Reactor bay - 4 Nos. (2 for South Olpad end and 2 for Nasik end) • 80 MVAr spare single-phase reactor at Nasik for above 240 MVAr switchable LR. • 80 MVAr spare single-phase reactor at South Olpad S/s is already available and same shall be used for subject Switchable LR.	
5.	Nasik – Pimpalgaon (MSETCL) 400 kV D/C line (Quad ACSR/AAAC/AL59 moose equivalent) *(Line to be routed from near Sinner TPP / Raymond i.e. from eastern side of Nasik)*	

6.	2 Nos. 400 kV line bays at Pimpalgaon S/s for Nasik – Pimpalgaon (MSETCL) 400 kV D/C line (Quad ACSR/AAAC/AL59 moose equivalent) • 400 kV line bays – 2 Nos.	

Note:

a) *Bay(s) required for completion of diameter (GIS) in one-and-half breaker scheme shall also be executed by the TSP.*
b) *TSP of South Olpad (GIS) to provide space for above scope of work (Free of cost)*
c) *MSETCL to provide space for above scope of work at Pimpalgaon S/s (Free of cost)*
d) *MSETCL to implement 220 kV downstream system from Nasik S/s in matching time-frame.*

3. The TSP shall ensure that design, construction and testing of all equipment, facilities, components and systems of the Project shall be in accordance with the provisions of the Transmission Service Agreement and applicable Rules/ Regulations, Orders and Guidelines issued by the Central Government.

4. **Transmission License**: The TSP shall obtain the Transmission License from the Commission.

5. **Bidding Process:** The Transmission Service Provider shall be selected through tariff based competitive bidding process for the Project based on meeting stipulated Qualification Requirements prescribed in Clause 2.1 of Section 2 of RFP and the lowest Quoted Transmission Charges discovered from Final Offers quoted during the e-reverse bidding. The selection of the TSP shall be subject to obtaining Transmission License from the Commission, which, after expiry, may be further extended by such period as deemed appropriate by the Commission under powers vested with it to amend the conditions of the Transmission License.

   The entire bidding process shall be conducted on electronic platform created by MSTC Limited.

   The Bid shall be a single stage two envelope bid comprising the Technical Bid and the Financial Bid. The Bidders shall submit the Bid online through the electronic bidding platform. In addition to the online submission, the Bidder with lowest Final Offer will be required to submit original hard copies of Annexure 3, Annexure 4 (if applicable), Annexure 6 (if applicable) and Annexure 14/14A/14B before issuance of LoI. There shall be no physical submission of the Financial Bid.

   The Technical Bid shall be opened first and the Financial Bid of only the bidders who have qualified in the Technical Bid shall be opened. The Financial Bid will comprise two rounds. In the first round the Initial Offer of the responsive bids would be opened and Quoted Transmission Charges of Initial Offer shall be ranked on the basis of ascending order. The Bidders, in the first fifty per cent of the ranking (with any fraction rounded off to higher integer) or four Bidders, whichever is higher, shall qualify for participating in the electronic reverse auction stage and submit their Final Offer.

6. The objective of the bidding process is to select a Successful Bidder pursuant to this RFP, who shall acquire one hundred percent (100%) of the equity shares of.....(Insert the name of SPV) along with all its related assets and liabilities as per the provisions of the Share Purchase Agreement, at the Acquisition Price to be intimated by the BPC, twenty (20) days prior

to the Bid Deadline.

The.....(Insert the name of SPV), of which one hundred percent (100%) equity shares will be acquired by the Selected Bidder, shall be responsible as the TSP, for ensuring that it undertakes ownership, financing, development, design, engineering, procurement, construction, commissioning, operation and maintenance of the Project, and to provide Transmission Service as per the terms of the RFP Project Documents.

The TSP shall ensure transfer of all project assets along with substation land, right of way and clearances to CTU or its successors or an agency as decided by the Central Government after 35 years from COD of project at zero cost and free from any encumbrance and liability. The transfer shall be completed within 90 days after 35 years from COD of project failing which CTU shall be entitled to take over the project assets Suo moto.

7. **Commencement of Transmission Service**: The Bidder shall have to commence Transmission Service in accordance with the provisions of the Transmission Service Agreement.

8. **Transmission Charges**: The Transmission Charges shall be payable by the Designated ISTS Customers in Indian Rupees through the CTU as per Central Electricity Regulatory Commission (Sharing of Inter-State Transmission Charges and Losses) Regulations as amended from time to time. Bidders shall quote the Transmission Charges as per the pre- specified structure, as mentioned in the RFP.

9. **Issue of RFP document:** The detailed terms and conditions for qualification and selection of the Transmission Service Provider for the Project and for submission of Bid are indicated in the RFP document. All those interested in purchasing the RFP document may respond in writing to Chief Executive Officer, vijay.kulkarni@recpdcl.in& tbcb@recpdcl.in at the address given in para 12 below with a non-refundable fee of Rs. 5,00,000/- (Rupees Five Lakh Only) or US$ 7,000 (US Dollars Seven Thousand Only) plus GST @18%, to be paid latest by 03.07.2026 via electronic transfer to the following Bank Account:

Bank Name, Address & Branch	ICICI Bank 9A, Phelps Building, Inner Circle, Connaught Place, New Delhi-110001
Bank Account Name	REC Power Development & Consultancy Limited
Bank Account No	000705041275
Bank IFSC Code No	ICIC0000007

Immediately after issuance of RFP document, the Bidder shall submit the Pre-Award Integrity Pact in the format as prescribed in Annexure B, which shall be applicable for and during the bidding process, duly signed on each page by any whole-time Director/ Authorized Signatory, duly witnessed by two persons, and shall be submitted by the Bidder in two (2) originals in a separate envelope, duly superscripted with Pre-Award Integrity Pact. The Bidder shall submit the Pre-Award Integrity Pact on non-judicial stamp paper of Rs. 100/- each duly purchased from the National Capital Territory of Delhi. In case the Bidder is in a consortium, the Pre- Award Integrity Pact shall be signed and submitted by each member of the Consortium separately.

The RFP document shall be issued to the Bidders on any working day from 04.05.2026 to 03.07.2026 between 1030 hours (IST) to 1600 hours (IST). The BPC, on written request and against payment of the above mentioned fee by any Bidder shall promptly dispatch the RFP document to such Bidder by registered mail/ air mail. BPC shall, under no circumstances, be held responsible for late delivery or loss of documents so mailed.

10. **Receipt and opening of Bid:** The Bid must be uploaded online through the electronic bidding platform on or before 1600 hours (IST) on 06.07.2026 Technical Bid will be opened by the Bid Opening Committee on the same day at 1630 hours (IST) in the office of Central Electricity Authority, in the online presence of Bidders' representatives who wish to attend. If the Bid Deadline is a public holiday at the place of submission of Bid, it shall be opened on the next working day at the same time and venue. In addition to the online submission, the Bidder with lowest Final Offer will be required to submit original hard copies of Annexure 3, Annexure 4 (if applicable), Annexure 6 (if applicable) and Annexure 14/14A/14B before issuance of LoI. Bidders meeting the Qualification Requirements, subject to evaluation as specified in Clause **3.2** to **3.4** shall be declared as "Qualified Bidders" and eligible for opening of Initial Offer.

11. The RFP document is not transferable. BPC reserves the right to reject all Bids and/or annul the process of tariff based competitive bidding for selection of Bidder as TSP to execute the Project without assigning any reason. BPC shall not bear any liability, whatsoever, in this regard.

12. **Nodal person for enquiries and clarifications**

All correspondence and clarification in respect of RFP document shall be addressed to:

Chief Executive Officer,
REC Power Development and Consultancy Limited
(A wholly owned subsidiary of REC Limited)
REC Corporate Head Quarter,
D Block, Plot No. I – 4,
Sec – 29 Gurugram – 122 001
Email: _vijay.kulkarni@recpdcl.in& tbcb@recpdcl.in

DISCLAIMER

1. This Request for Proposal (RFP) document is not an agreement or offer by the BPC to the prospective Bidders or to any other party. The purpose of this RFP document is to provide interested parties with information to assist the formulation of their Bid. The RFP document is based on material and information available in public domain.

2. This RFP, along with its Annexure, is not transferable and the information contained therein are to be used only by the person to whom it is issued. It may not be copied or distributed by the recipient to third parties (other than in confidence to the recipient's professional advisors). In the event that the recipient does not continue with its involvement in the Project in accordance with this RFP, this RFP must be kept confidential.

3. While this RFP has been prepared in good faith, neither the BPC nor its employees or advisors/consultants make any representation or warranty expressed or implied as to the accuracy, reliability or completeness of the information contained in this RFP. The Bidders shall satisfy themselves, on receipt of the RFP document, that the RFP document is complete in all respects. Intimation of any discrepancy shall be given to this office immediately. If no intimation is received from any Bidder within ten (10) days from the date of issue of this RFP document on or before the date & time mentioned in this RFP, it shall be considered that the issued document, complete in all respects, has been received by the Bidders.

   This bidding process is in accordance with the Bidding Guidelines issued by Ministry of Power, Government of India under Section 63 of the Electricity Act, 2003. Revisions or amendments in these Bidding Guidelines may cause the BPC to modify, amend or supplement this RFP document, including the RFP Project Documents to be in conformance with the Bidding Guidelines.

4. This RFP document includes statements, which reflect various assumptions arrived at by BPC in order to give a reflection of current status in the RFP. These assumptions should not be entirely relied upon by Bidders in making their own assessments. This RFP document does not purport to contain all the information each Bidder may require and may not be appropriate for all persons. It is not possible for BPC to consider the investment objectives, financial situation and particular needs of each party who reads or uses this RFP document. Certain Bidders may have a better knowledge of the Project than the others. Each Bidder should conduct its own investigations and analysis and should check the accuracy, reliability and completeness of the information in this RFP document and obtain independent advice from appropriate sources.

5. Neither BPC nor their employees or consultants make any representation or warranty as to the accuracy, reliability or completeness of the information in this RFP document.

6. Neither BPC, its employees nor its consultants will have any liability to any Bidder or any other person under the law of contract, tort, the principles of restitution or unjust enrichment or otherwise for any loss, expense or damage which may arise from or be incurred or suffered in connection with anything contained in this RFP document, any matter deemed to form part of this RFP document, the award of the Project, the information supplied by or on behalf of BPC or its employees, any consultants or otherwise arising in any way from the qualification process for the said Project.

7. By participating in the bidding process, each of the Bidder shall have acknowledged and

accepted that it has not been induced to enter into such agreement by any representation or warranty, expressed or implied, or relied upon any such representation or warranty by or on behalf of BPC or any person working in the bidding process.

8. BPC may in its absolute discretion, but without being under any obligation to do so, update, amend or supplement this RFP document. Such updations, amendments or supplements, if any, will however be circulated to the Bidders not later than 15 days prior to the last date for submission of Bid.

9. Each Bidder unconditionally agrees, understands and accepts that the BPC reserves the rights to accept or reject any or all Bids without giving any reason. Neither the BPC nor its advisers shall entertain any claim of any nature, whatsoever, including without limitations, any claim seeking expenses in relation to the preparation of Bids.

10. This RFP may be withdrawn or cancelled by the BPC at any time without assigning any reasons thereof. BPC further reserves the right, at its complete discretion to reject any or all of the Bids without assigning any reasons whatsoever.

INDEX

SECTION	CONTENTS	PAGE NO.
	Definitions	13
1.	Introduction	18
2.	Information And Instructions For Bidders	25
3.	Evaluation Of The Technical And Financial Bid	52
4.	Annexures For Bid	58
	Annexures	
1	Format for the Covering Letter	60
2	Format for Letter of Consent from Consortium Members	64
3	Format for evidence of authorized signatory's authority (Power of Attorney)	66
4	Format for Power of Attorney to be provided by each of the other members of the Consortium in favor of the Lead Member	68
5	Format for Bidder's composition and ownership structure and Format for Authorization	70 & 72
6	Format for Consortium Agreement	73
7A	Format for Qualification Requirement – Net worth	78
7B	Format for Technical Requirement	81
7C	Format for Technical and Financial Requirement – Relationship & Equity Shareholding	84
7D	Format for Additional Information for verification of Financial and Technical Capabilities of Bidders	86
8	Format for Undertaking and Details of Equity Investment	89
9	Format for Authorization from Parent / Affiliate of Bidding Company / Member of Bidding Consortium whose technical / financial capability has been used by the Bidding Company / Member of Bidding Consortium.	93
10	Format for Undertaking by Technically/Financially Evaluated Entity/Ultimate Parent Company	95
11	Format for Board Resolution	97
11A	Illustration for Applicable Board Resolution Requirements under Clause 2.5.2	100
12	Format for illustration of Affiliates	102
13	Format for disclosure	103
14	Format For Bid Bond	104
14A	Format of the Surety Bond for Bid Security	106

SECTION	CONTENTS	PAGE NO.
14B	Format of Payment on Order Instrument to be issued by IREDA/REC/PFC	108
15	Format for Contract Performance Guarantee	111
15A	Format for Surety Insurance Contract	113
15B	Format for issuance of Payment on Order Instrument	116
16	Format for Checklist for Technical Bid Submission Requirements	119
17	List of Banks	122
18	Grid Map of the Project	123
19	Format for Clarifications / Amendments on the RFP / RFP Project Documents	124
20	Formats For RFP Project Documents	125
21	Format For Financial Bid	126
22	Format of Affidavit	127
	Annexure A	129
	Annexure-B	130
	Annexure-C	137

DEFINITIONS

Any capitalized term, used but not defined in this RFP, shall have the meaning ascribed to such term in the RFP Project Documents, or the Bidding Guidelines, in that order. In absence of availability of definitions in the foregoing references, the capitalized terms shall be interpreted in accordance with the Electricity Act 2003, Grid Code or any other relevant electricity law, rule or regulation prevalent in India, as amended or re-enacted from time to time, in that order.

The following terms are defined for use in this RFP:

"Acquisition Price" shall have the same meaning as defined in the Share Purchase Agreement;

"Affiliate" shall mean a company that either directly or indirectly

i. controls or
ii. is controlled by or
iii. is under common control with

a Bidding Company (in the case of a single company) or a Member (in the case of a Consortium) and "**control**" means ownership by one entity of at least twenty six percent (26%) of the voting rights of the entity. As an illustration a chart is annexed hereto as Annexure – 12;

"Bid" shall mean Technical Bid and Financial Bid (Initial Offer and Final Offer) submitted by the Bidder, in response to this RFP, in accordance with the terms and conditions thereof;

"Bidder" shall mean either a single company (including its permitted successors and legal assigns) or a Consortium of companies (including its permitted successors and legal assigns) submitting a Bid in response to this RFP. Any reference to the Bidder includes Bidding Company, Bidding Consortium/ Consortium, Member in a Bidding Consortium and Lead Member of the Bidding Consortium jointly and severally, as the context may require;

"Bidding Company" shall refer to such single company (including its permitted successors and legal assigns) that has submitted a Bid for the Project;

"Bidding Consortium/ Consortium" shall refer to a group of companies (including their permitted successors and legal assigns) that has collectively submitted a Bid for the Project;

"Bidding Guidelines" shall mean the "Tariff Based Competitive-Bidding Guidelines for Transmission Service" and "Guidelines for Encouraging Competition in Development of Transmission Projects" issued by Government of India, Ministry of Power under Section – 63 of Electricity Act as amended from time to time;

"Bid Bond" shall mean the unconditional and irrevocable bank guarantee or unconditional and irrevocable Insurance Surety Bond issued by Insurance Company authorized by Insurance Regulatory and Development Authority of India) or Payment on Order Instrument for **Rupees Thirty-Six Crore (Rs. 36.00 Crore)** only, to be submitted along with the Technical Bid by the Bidder under Clause 2.11 of this RFP, as per the format prescribed in Annexure 14 (for Bank Guarantee) or Annexure 14A (for Insurance Surety Bond) or Annexure 14B (for Payment on Order);

"Bid Deadline" shall mean the last date and time for submission of online Bid in response to

this RFP, specified in Clause 2.7.1;

"Bid Process Coordinator or BPC" shall mean a person or its authorized representative as notified by the Government of India, responsible for carrying out the process for selection of Bidder who will acquire Transmission Service Provider;

"CEA" shall mean the Central Electricity Authority constituted under Section - 70 of the Electricity Act;

"Commission" or "CERC" shall mean the Central Electricity Regulatory Commission of India constituted under Section-76 of The Electricity Act, 2003 and any successors and assigns;

"Conflict of Interest" A Bidder shall be considered to be in a Conflict of Interest with one or more Bidders in the same bidding process if they have a relationship with each other, directly or through a common company, that puts them in a position to have access to information about or influence the Bid of another Bidder.

Provided that if two or more bidders in the bidding process have formed a Joint Venture Company or Consortium to execute another project, the Bidders will not be considered to have Conflict of Interest;

"Commercial Operation Date (COD)" shall mean the date as per Article 6.2 of the Transmission Service Agreement;

"Consents, Clearances, Permits" shall mean all authorizations, licenses, approvals, registrations, permits, waivers, privileges, acknowledgements, agreements, or concessions required to be obtained from or provided by any concerned authority for the development, execution and performance of Project including without any limitation on the construction, ownership, operation and maintenance of the transmission lines and/or sub-stations;

"Contract Performance Guarantee" shall have the meaning as per Clause 2.12 of this RFP;

"Contract Year" shall mean the period beginning on the Scheduled COD, and ending on the immediately succeeding March 31 and thereafter each period of 12 months beginning on April 1 and ending on March 31 provided that:

(i) the last Contract Year shall end on the last day of the term of the Transmission Service Agreement;

"CTU/Central Transmission Utility" shall have same meaning as defined in the Electricity Act, 2003;

"Designated ISTS Customers" or "DICs" shall have the meaning as ascribed in Regulation 2(l) of Central Electricity Regulatory Commission (Sharing of inter-State Transmission Charges and Losses) Regulation 2020 and as amended or modified from time to time;

"Effective Date" shall have the meaning as ascribed thereto in the Transmission Service Agreement;

"Element" shall mean-each Transmission Line or each circuit of the Transmission Lines (where there are more than one circuit) or each bay of the Sub-station or switching station or HVDC

terminal or inverter station of the Project, including ICTs, Reactors, SVC, FSC, etc. forming part of the ISTS which will be owned, operated and maintained by the concerned ISTS Licensee, and which may have a separate scheduled COD as per Schedule 2 of the Transmission Service Agreement and may have a separate percentage for recovery of Transmission Charges on achieving COD as per Schedule 5 of the Transmission Service Agreement;

"Final Offer" shall mean the Quoted Transmission Charges, required to be submitted as part of the Financial Bid on the electronic bidding platform during the e-reverse bidding stage. In case, no Final Offer is received during the e-reverse bidding stage then the lowest "Initial Offer" shall be deemed to be the Final Offer**;**

"Financial Bid" shall mean the Initial Offer and Final Offer, containing the Bidder's Quoted Transmission Charges, as per the format at Annexure – 21 of this RFP**;**

"Financially Evaluated Entity" shall mean the company which has been evaluated for the satisfaction of the financial requirement set forth in Clause **2.1.3** hereof;

"Government" shall mean the Central Government;

"Grid Code" / "IEGC" or **"State Grid Code"** shall mean the Grid Code specified by the Central Commission under clause (h) of sub-section (1) of Section 79 of the Electricity Act and/or the State Grid Code as specified by the concerned State Commission referred under clause (h) of sub-section (1) of Section 86 of the Electricity Act as applicable;

"Infrastructure sector" shall mean such sectors notified by Department of Economic Affairs in its Gazette Notification no. 13/1/2017-INF dated 14th November, 2017 and as amended from time to time;

"Initial Offer" shall mean the Quoted Transmission Charges, required to be submitted as part of the Financial Bid on the electronic bidding platform along with the Technical Bid**;**

"Inter State Generating Station" or "ISGS" shall mean a Central / other generating station in which two or more states have shares and whose scheduling is to be coordinated by the Regional Load Despatch Centre;

"Inter-State Transmission System" shall have same meaning as defined in the Electricity Act, 2003;

"Lead Member of the Bidding Consortium" or "Lead Member" shall mean a company who commits at least twenty six percent (26%) equity stake in the Project, meets the technical requirement as per Clause 2.1.2 and so designated by other Member(s) in Bidding Consortium;

"Letter of Intent" or "LoI" shall mean the letter to be issued by the BPC to the Bidder, who has been identified as the selected bidder, for award of the Project to such Bidder;

"Member in a Bidding Consortium/Member" shall mean each company in the Bidding Consortium;

"MOP" shall mean the Ministry of Power, Government of India;

"MOEF" shall mean the Ministry of the Environment and Forests, Government of India;

"National Committee on Transmission" shall mean the committee constituted by the Ministry of Power, Government of India in terms of the "Guidelines for Encouraging Competition in Development of Transmission Projects", as notified from time to time;

"Nodal Agency" shall mean CTU, which shall execute and implement the Transmission Service Agreement (TSA);

Provided that while taking major decisions, CTU shall consult CEA on technical matters and any other matter it feels necessary.

"Parent Company" shall mean an entity that holds at least twenty six percent (26%) of the paid - up equity capital directly or indirectly in the Bidding Company or in the Member in a Bidding Consortium, as the case may be;

"Payment on Order Instrument" shall mean Letter of Undertaking from Indian Renewable Energy Development Agency Limited (IREDA) or Power Finance Corporation Limited (PFC) or REC Limited (REC) [the three non-banking financial institutions under Ministry of New & Renewable Energy (MNRE)/ Ministry of Power (MoP)], to pay in case situation of default of Transmission Service Provider (TSP) in terms of tender conditions/ Power Purchase Agreement (PPA) arises. Such Letter(s) will have same effect as that of a Bank Guarantee issued by any public sector bank. Such "Payment on Order instrument" would have terms and conditions similar to that of any Bank Guarantee given by any public sector bank and would promise to pay the Nodal Agency on demand within stipulated time. TSPs can seek such Letter(s) by offering due security to the above-mentioned three nonbanking financial institutions mentioned above (IREDA, PFC & REC). Nodal Agency shall not accept the instrument of 'Letter of Undertaking' as described above or in any other form, from any other non-banking financial institutions or bank, except IREDA, PFC & REC.

"Qualification Requirements" shall mean the qualification requirements as set forth in Section-2, Clause 2.1 of this RFP;

"Quoted Transmission Charges" shall mean the quoted single annual Transmission Charges submitted online through the electronic bidding platform by the Bidder as part of its Financial Bid as per the format in Annexure – 21 of this RFP;

"RFP" shall mean Request for Proposal document along with all schedules, formats, annexure and RFP Project Documents attached hereto, issued by BPC for tariff based competitive bidding process for selection of bidder who will acquire the TSP through e-reverse bidding to execute the Project, and shall include any modifications, amendments or alterations or clarifications thereto;

"RFP Project Documents" shall mean the following documents to be entered into in respect of the Project, by the parties to the respective agreements:

a. Transmission Service Agreement (TSA),
b. Share Purchase Agreement,
c. Agreement(s) required, if any, under Central Electricity Regulatory Commission (Sharing of Inter-State Transmission Charges and Losses) Regulations as amended from time to time and
d. Any other agreement, as may be required;

"Scheduled COD" shall have the meaning as ascribed hereto in Clause 2.6 of this RFP;

"Statutory Auditor" shall mean the auditor appointed under the provisions of the Companies Act, 1956 / Companies Act, 2013 (as the case may be) or under the provisions of any other applicable governing law;

"Share Purchase Agreement" shall mean the agreement amongst REC Power Development and Consultancy Limited,..... (Insert the name of SPV) and the Successful Bidder for the purchase of one hundred (100%) per cent of the shareholding of the..... (Insert the name of SPV) for the Acquisition Price, by the Successful Bidder on the terms and conditions as contained therein;

"Successful Bidder" or **"Selected Bidder"** shall mean the Bidder selected pursuant to this RFP to acquire one hundred percent (100%) equity shares of.....(Insert the name of SPV), along with all its related assets and liabilities, which will be responsible as the TSP to establish the Project on build, own, operate and transfer basis as per the terms of the Transmission Service Agreement and other RFP Project Documents;

"Survey Report" shall mean the report containing initial information regarding the Project and other details provided as per the provisions of Clause 1.6.2.1.1 of this RFP;

"Technical Bid" shall mean the bid submitted online through the electronic bidding platform, containing the documents as listed out in Clause 2.5.2 of this RFP;

"Technically Evaluated Entity" shall mean the company which has been evaluated for the satisfaction of the technical requirement set forth in Clause 2.1.2 hereof;

"Transmission Charges" shall mean the Final Offer quoted by Selected Bidder and adopted by the Commission, and as computed in terms of the provisions of Schedule 4 of the TSA, payable to the ISTS Licensee by the Designated ISTS Customers, and collected / disbursed by the CTU, as per Central Electricity Regulatory Commission (Sharing of Inter-State Transmission Charges and Losses) Regulations as amended from time to time;

"Transmission License" shall mean the license granted by the Commission in terms of the relevant regulations for grant of such license issued under the Electricity Act, 2003;

"Transmission Service Agreement" or **"TSA"** shall mean the agreement entered into between Nodal Agency and the TSP, pursuant to which the TSP shall build, own, operate and transfer the Project and make available the assets of the Project on a commercial basis;

"Transmission Service Provider" or "TSP" shall mean …… (Insert the name of SPV) which has executed the Transmission Service Agreement and which shall be acquired by the Selected Bidder;

"Ultimate Parent Company" shall mean an entity which owns at least twenty six percent (26%) equity in the Bidding Company or Member of a Consortium, (as the case may be) and in the Technically Evaluated Entity and/or Financially Evaluated Entity (as the case may be) and such Bidding Company or Member of a Consortium, (as the case may be) and the Technically Evaluated Entity and/or Financially Evaluated Entity (as the case may be) shall be under the direct control or indirectly under the common control of such entity.

SECTION – 1

INTRODUCTION

SECTION 1

1. INTRODUCTION

1.1 Ministry of Power, Government of India vide its Gazette Notification No. CG-DL-E-19022026-270309 dated 12.02.2026 has notified REC Power Development and Consultancy Limited (RECPDCL) to be the Bid Process Coordinator (BPC) for the purpose of Selection of Bidder as Transmission Service Provider to establish Inter-State Transmission scheme i.e., **"Common Transmission System for evacuation of power from Lakadia (Phase-II: 7.5GW), Jam Khambhaliya (Phase-II: 5.5GW) and Jamnagar (Phase-I: 1GW) - Part-B"** through tariff based competitive bidding process.

The BPC hereby invites Bids from all prospective Bidders in accordance with this Request for Proposal (RFP) to select prospective Transmission Service Provider (TSP) in accordance with the "Tariff Based Competitive-Bidding Guidelines for Transmission Service" and "Guidelines for Encouraging Competition in Development of Transmission Projects" issued by Government of India, Ministry of Power under Section – 63 of the Electricity Act. The BPC shall select the Bidder having the prescribed technical and financial capability to become TSP and be responsible for establishing the Project in the state(s) of Gujarat and Maharashtra. The TSP will make the Project available against payment of Transmission Charges, as adopted by the Commission, payable to the TSP, as per Central Electricity Regulatory Commission (Sharing of Inter-State Transmission Charges and Losses) Regulations as amended from time to time.

1.2 The TSP will be required to establish the following Inter State Transmission System i.e., **"Common Transmission System for evacuation of power from Lakadia (Phase-II: 7.5GW), Jam Khambhaliya (Phase-II: 5.5GW) and Jamnagar (Phase-I: 1GW) - Part-B"** (hereinafter referred to as 'Project') on build, own, operate and transfer basis, and to provide transmission service.

Sl. No.	Scope of the Transmission Scheme	Scheduled COD in months from Effective Date
1.	Establishment of 765/400 kV, 3x1500 MVA & 400/220 kV, 3x500 MVA Nasik S/s (towards South of Nasik) with 2x330 MVAr 765 kV bus reactor and 2x125 MVAr 400 kV bus reactor. • 765/400 kV, 1500 MVA ICT – 3 Nos. (10x500 MVA single phase units including one spare ICT Unit) • 400/220 kV ICTs - 3 Nos. • 765 kV ICT bays – 3 Nos. • 400 kV ICT bays –6 Nos. • 220 kV ICT bays – 3 Nos. • 765 kV Line bays – 2 Nos. • 1x330 MVAr, 765 kV bus reactor- 2 Nos. (7x110 MVAr single phase Reactors including one spare Unit for bus /line reactor) • 765 kV Bus reactor bay – 2 Nos. • 220 kV BC– 1 No.	36 months

	• 220 kV TBC – 1 No. • 125 MVAr, 420 kV Bus Reactor- 2 Nos. • 400 kV Bus Reactor bay- 2 Nos. • 400 kV line bays - 2 Nos. • 220 kV line bays - 6 Nos. (for MSETCL 220 kV lines: Adwadi 220 kV D/C, Nasik GCR 220 kV D/C & Nasik OCR 220 kV D/C) **Future provision (space for):** • 765/400 kV, 1500 MVA ICT along with bays- 3 Nos. (on Sec-II) • 765 kV line bays along with switchable line reactors – 10 Nos. (4 Nos. on Sec-I & 6 Nos. on Sec-II) • 765 kV, 330 MVAr Bus Reactor along with bay: 2 Nos. (on Sec-II) • 765 kV Sectionaliser bay: 1 -set • 400 kV Sectionaliser bay: 1- set • 400/220 kV, 500 MVA ICT along with bays - 7 Nos. (2 on Sec-I & 5 on Sec-II) • 400 kV line bays along with Switchable Line Reactors– 10 Nos. (4 on Sec-I & 6 on Sec-II) • 420 kV, 125 MVAr Bus Reactor along with bays: 2 Nos. (on Sec-II) • 220 kV Sectionaliser bay: 1- set • 220 kV BC & TBC – 1 No. each • 220 kV line bays: 2 No. on Sec-I & 8 Nos. on Section-II	
2.	South Olpad (GIS) – Nasik 765 kV D/C line	
3.	2 Nos. 765 kV line bays at South Olpad (GIS) S/s (Sec-II) for South Olpad – Nasik 765 kV D/C line • 765 kV line bays – 2 Nos. (GIS) (Sec-II) along with 1 set of 765 kV sectionaliser bay so as to establish 765 kV Sec-II.	
4.	765 kV, 240 MVAr Switchable line reactors on each circuit at both ends of South Olpad – Nasik 765kV D/C line • 240 MVAr, 765 kV Switchable Line Reactor- 4 Nos. (2 for South Olpad end and 2 for Nasik end) • 765 kV Switchable Line Reactor bay - 4 Nos. (2 for South Olpad end and 2 for Nasik end) • 80 MVAr spare single-phase reactor at Nasik for above 240 MVAr switchable LR. • 80 MVAr spare single-phase reactor at South Olpad S/s is already available and same shall be used for subject Switchable LR.	

5.	Nasik – Pimpalgaon (MSETCL) 400 kV D/C line (Quad ACSR/AAAC/AL59 moose equivalent) *(Line to be routed from near Sinner TPP / Raymond i.e. from eastern side of Nasik)*	
6.	2 Nos. 400 kV line bays at Pimpalgaon S/s for Nasik – Pimpalgaon (MSETCL) 400 kV D/C line (Quad ACSR/AAAC/AL59 moose equivalent) • 400 kV line bays – 2 Nos.	

Note:

a) Bay(s) required for completion of diameter (GIS) in one-and-half breaker scheme shall also be executed by the TSP.
b) TSP of South Olpad (GIS) to provide space for above scope of work (Free of cost)
c) MSETCL to provide space for above scope of work at Pimpalgaon S/s (Free of cost)
d) MSETCL to implement 220 kV downstream system from Nasik S/s in matching time-frame.

1.3 Project Description

Govt. of India has set a target for establishing 500 GW capacity from non-fossil energy sources by 2030. Jam Khambhaliya REZ - Phase II (5500 MW), Jamnagar Phase-I (1000 MW) and Lakadia REZ - Phase II (7500 MW) in Gujarat have been planned to enable immediate interconnection facility to RE projects in respective areas.

However, for onward evacuation of power from the above areas, a Common Transmission System has been planned for dispersal of above RE power towards load centers in South Gujarat and Maharashtra.

In view of the above, transmission scheme for onward evacuation of cumulative capacity of 14 GW power from various RE Projects in Dwarka/Jamnagar and Lakadia areas in Gujarat namely **"Common Transmission System for evacuation of power from Lakadia (Phase-II: 7.5GW), Jam Khambhaliya (Phase-II: 5.5GW) and Jamnagar (Phase-I: 1GW)" Parts A, B & C** were taken up for deliberations in the 37th NCT meeting held on 19.01.2026.

The subject Transmission scheme **"Common Transmission System for evacuation of power from Lakadia (Phase-II: 7.5 GW), Jam Khambhaliya (Phase-II: 5.5 GW) and Jamnagar (Phase-I: 1 GW) - Part B"** inter-alia includes establishment of 765/400 kV, 3x1500 MVA and 400/220 kV, 3x500 MVA Nasik S/s (towards South of Nasik), South Olpad (GIS) – Nasik 765 kV D/C line and Nasik – Pimpalgaon (MSETCL) 400 kV D/C line. Further, Common Transmission System for evacuation of power from Lakadia (Phase-II: 7.5 GW), Jam Khambhaliya (Phase-II: 5.5 GW) and Jamnagar (Phase-I: 1 GW)" Parts A & C shall also be required along with this scheme.

The subject Transmission system was recommended by NCT in the 37th NCT meeting held on 19.01.2026. Further, Ministry of Power vide Gazette notification dated 12.02.2026 has

approved this Transmission scheme for implementation through TBCB mode and appointed RECPDCL as BPC.

1.4 Transmission Grid Map

Transmission Grid Map indicating the location of the Project is enclosed as Annexure 18 of this RFP for information and reference of the Bidders.

1.5 The objective of the bidding process is to select a Successful Bidder pursuant to this RFP, who shall acquire one hundred percent (100%) of the equity shares of …… (Insert the name of SPV) along with all its related assets and liabilities as per the provisions of the Share Purchase Agreement, at the Acquisition Price to be intimated by the BPC, twenty (20) days prior to the Bid Deadline.

The.....(Insert the name of SPV), of which one hundred percent (100%) equity shares will be acquired by the Selected Bidder, shall be responsible as the TSP, for ensuring that it undertakes ownership, financing, development, design, engineering, procurement, construction, commissioning, operation and maintenance of the Project, and to provide Transmission Service as per the terms of the RFP Project Documents.

The TSP shall ensure transfer of all project assets along with substation land, right of way and clearances to CTU or its successors or an agency as decided by the Central Government after 35 years from COD of project at zero cost and free from any encumbrance and liability. The transfer shall be completed within 90 days after 35 years from COD of project failing which CTU shall be entitled to take over the project assets Suo moto.

1.6 Brief Scope of Work

1.6.1 Scope of Transmission Service Provider

The TSP's scope of work for the Project shall comprise, but not necessarily be limited to the following:

1.6.1.1 Establishment, operation and maintenance of the Project on build, own, operate and transfer basis and completion of all the activities for the Project, including survey, detailed project report formulation, arranging finance, project management, necessary Consents, Clearances and Permits (way leave, environment & forest, civil aviation, railway/ road/river/canal/power crossing/PTCC, etc.), land compensation, design, engineering, equipment, material, construction, erection, testing & commissioning.

Further, the actual location of Greenfield Substation (Switching Station or HVDC Terminal or Inverter Station) in the scope of TSP:

- For a Generation Pooling Substation shall not be beyond 3 Km radius of the location proposed by the BPC in their Survey Report.
- For Load Serving Substation within the scope of TSP shall not be beyond 5 Km radius of the location proposed by the BPC in their Survey Report.
- For an Intermediate Substation shall not be beyond 10 Km radius of the location proposed by the BPC in their Survey Report.

1.6.1.2 The TSP shall ensure that design, construction and testing of all equipment, facilities, components and systems of the Project shall be in accordance with Transmission Service Agreement and applicable Rules/ Regulations, Orders and Guidelines issued by the Central Government.

1.6.1.3 The TSP shall ensure timely completion of entire scope of Project in all respects and its operation and maintenance, as shall be specified in the RFP documents.

1.6.1.4 The TSP shall seek Transmission License from the Commission, as per the provisions of the Electricity Act and regulations made thereunder.

1.6.1.5 The TSP shall seek approval under Section 164 of Electricity Act, from CEA after acquisition of ..... (Insert the name of SPV). The approval shall be granted by CEA generally within 30 days but in no case later than 45 days from the date of receipt of application (complete in all aspects).

1.6.2 **Scope of Bid Process Coordinator (BPC)**

BPC's scope of work is briefly outlined hereunder:

1.6.2.1 The BPC has initiated development of the Project and shall be responsible for the tasks in this regard as specified hereunder:

1. Provide to the Bidders a Survey Report for the Project at least forty five (45) days prior to the Bid Deadline. The Survey Report shall include the suggested route with approximate route length, type of terrain likely to be encountered and its likely implication in terms of Right of Way (ROW), statutory clearances, location of substations or converter stations and land area to be acquired for the substation or converter station.

2. To obtain approval for laying of overhead transmission lines under Section 68 of Electricity Act, from the Government at least twenty (20) days prior to Bid Deadline.

3. To initiate acquisition of land for location specific substations, switching stations or HVDC terminal or inverter stations, if required.

4. To initiate process of seeking forest clearance, if required

5. The BPC shall intimate to the Bidders, the Acquisition Price payable by the Selected Bidder to the REC Power Development and Consultancy Limited for the acquisition of one hundred percent (100%) of the equity shareholding of.....(Insert the name of SPV), along with all its related assets and liabilities at least twenty (20) days prior to the Bid Deadline.

6. The BPC shall ensure issuance of all finalized RFP Project Documents, at least fifteen (15) days prior to the Bid Deadline.

Provided that for any delay in meeting the above obligations of the BPC within the specified time period above, the Bid Deadline as per Clause 2.7.1 shall be extended on a day for day basis.

1.6.2.2 The details and documents as may be obtained by the BPC/ project specific SPV in relation

to the Project shall be handed over to the TSP on an as-is-where-is basis, so that it may take further actions to obtain Consents, Clearances and Permits.

1.7 All costs (including direct and indirect) incurred by the BPC/ project specific SPV in connection with the activities concerning the Project shall be recovered from the TSP, which shall be included in the Acquisition Price.

1.8 The Project is required to be completed progressively in accordance with the schedule prescribed in this RFP.

1.9 A company under the Companies Act, 2013 by the name.....(Insert the name of SPV) has been incorporated to initiate the activities for execution of the Project. The said company shall be acquired by the successful Bidder as per terms and conditions as may be prescribed in RFP.

1.10 The Ministry of Power and the appropriate state government(s) shall provide their support to the TSP, on best endeavor basis, in enabling the TSP to develop the Project.

1.11 All Bidders are required to submit their Bid in accordance with the instructions set forth in this RFP.

1.12 Once the Successful Bidder is selected, the details and documents as may be obtained by the BPC/ project specific SPV in relation to the Project, shall be handed over to the Successful Bidder on as is where basis, so that it may take further actions to obtain all necessary Consents, Clearances and Permits and the TSP shall not be entitled for any extensions in the Scheduled COD of the Project except as provided for in the TSA.

1.13 The assets of the Project shall be made available on a commercial basis as per the terms and conditions of the Transmission Service Agreement and Central Electricity Regulatory Commission (Sharing of Inter-State Transmission Charges and Losses) Regulations as amended from time to time.

SECTION - 2

INFORMATION AND INSTRUCTIONS FOR BIDDERS

SECTION – 2

2. INFORMATION AND INSTRUCTIONS FOR BIDDERS

2.1 Qualification Requirements

2.1.1 The Bidder should be a company duly incorporated under the relevant laws (Bidding Company) or a Consortium of companies (Bidding Consortium) with one of the companies acting as the Lead Member of the Bidding Consortium. The Bidder shall be selected on meeting the Qualification Requirements specified in Section 2 of this RFP, as demonstrated by the Bidder's Technical Bid and the lowest Quoted Transmission Charges discovered from Final Offers quoted during the e-reverse bidding. A Bidding Consortium can participate in the bidding process for the Project if any Member of the Consortium has purchased the RFP document for such Project. Bidder who agree and undertake to procure the products associated with the Transmission System as per provisions of Public Procurement (Preference to Make in India) orders issued by Ministry of Power vide orders No. 11/5/2018 - Coord. dated 28.07.2020 as amended vide order No. A1/2021- FSC- Part(5) dated 16.11.2021 and No.: P45021/2/2017-PP (BE-II)-Part-4 Vol.II dated 19.07.2024 issued by Ministry of Power for transmission sector, as may be further amended from time to time, read with Department for Promotion of Industry and Internal Trade (DPIIT) orders in this regard, shall be eligible hereunder. Further, it is clarified that Procuring Entity as defined in orders shall deemed to have included Selected Bidder and/ or TSP.

Besides, Department of Expenditure, Ministry of Finance in suppression of OMs issued vide Order (Public Procurement No 1) bearing File No. 6/18/2019-PPD dated 23.07.2020, Order (Public Procurement No 2) bearing File No. 6/18/2019-PPD dated 23.07.2020 and Order (Public Procurement No. 3) bearing File No. 6/18/2019-PPD, dated 24.07.2020, Office Memorandum (OM) No. F.18/37/2020-PPD dated 08.02.2021, OM No. F.12/1/2021-PPD(Pt.) dated 02.03.2021, OM No. F.7/10/2021-PPD dated 08.06.2021 and Order (Public Procurement No 4) bearing File No. F.7/10/2021-PPD dated 23.02.2023 as amended from time to time, have issued directions regarding public procurement from a bidder of a country, which shares land border with India are also applicable.

2.1.2 **Technical requirement to be met by the Bidding Company or Lead Member of Bidding Consortium**

The Bidder must fulfill any one of the following technical requirements:

(i) Experience of development of projects in the Infrastructure Sector in the last five (5) years with aggregate capital expenditure of not less than **Rs. 1800.00 Crore** or equivalent USD (calculated as per provisions in Clause 3.4.1**).** However, the capital expenditure of each project shall not be less than **Rs. 360.00 Crore** or equivalent USD (calculated as per provisions in Clause 3.4.1).

For this purpose, capital expenditure incurred on projects that have been commissioned/completed at least seven (7) days prior to Bid Deadline shall be considered. The capital expenditure discussed above shall be as capitalized and reflected in the audited books of accounts of the Technically Evaluated Entity. In case a clearly identifiable part of a project has been put into commercial operation,

the capital expenditure on such part of the project shall be considered. The Technically Evaluated Entity must have either executed such projects itself or must have held directly or indirectly at least twenty six percent (26%) of the shareholding in the company that has executed the project(s) from the date of financial closure of the project(s) till the time of commissioning/completion of such project(s).

OR

(ii) Experience in construction of project in infrastructure sector: The Technically Evaluated Entity should have received aggregate payments not less than **Rs. 1800.00** Crore or equivalent USD (calculated as per provisions in Clause 3.4.1) from its client(s) for construction works fully completed during the last 5(five) financial years. However, the payment received from each project shall not be less than **Rs. 360.00** Crore or equivalent USD (calculated as per provisions in Clause 3.4.1).

For this purpose, payments received on projects that have been commissioned/ completed at least seven (7) days prior to Bid Deadline shall be considered. Further only the payments (gross) actually received, during such 5 (five) financial years shall qualify for purposes of computing the technical capacity. For the avoidance of doubt, construction works shall not include cost of land, supply of goods or equipment except when such goods or equipment form part of a turn-key construction contract/ EPC contract for the project. Further, in cases where different individual contracts are signed between same entities for the same project, the cumulative payments received under such individual contracts shall be considered for meeting the qualification requirement.

The Technically Evaluated Entity may be the Bidding Company or the Lead Member of a Consortium or an Affiliate or Parent of such Bidding Company or the Lead Member, as the case may be.

Bidders shall furnish documentary evidence duly certified by authorized signatory of the Bidder who has been issued Power of Attorney in support of their technical capability as defined in Clause 2.1.2 of this RFP.

2.1.3 **Financial requirement to be met by the Bidding Company/Bidding Consortium**

2.1.3.1 The Bidder must fulfill following financial requirements:

A. Networth:

Networth should be not less than Rs**. 720.00 Crore** or equivalent USD (calculated as per provisions in Clause 3.4.1**)** computed as the Networth based on unconsolidated audited annual accounts (refer to Note below) of any of the last three (3) financial years as provided in Clause 2.2.3, immediately preceding the Bid Deadline. Also, the Networth of any of the last three (3) financial years should not be negative.

Note: Audited consolidated annual accounts of the Bidder may be used for the purpose of financial criteria provided the Bidder has at least 26% equity in each company whose accounts are merged in the audited consolidated accounts and provided further that the financial capability of such companies (of which accounts are being merged in the consolidated accounts) shall not be considered again for the purpose of evaluation of the

Technical Bid. Bidders shall furnish prescribed Annexure 7 (A) duly certified by authorized signatory of the Bidder who has been issued Power of Attorney and the Statutory Auditor and separate computation sheet for Networth duly certified by Statutory Auditor in support of their financial capability as defined in Clause 2.1.3 of this RFP.

2.1.3.2 The Networth shall be computed in the following manner by the Bidder:

A. Networth

=	Equity share capital
Add:	Reserves
Subtract:	Revaluation Reserves
Subtract:	Intangible Assets
Subtract:	Miscellaneous expenditures to the extent not written off and carry forward losses

2.1.3.3 If the Technical Bid is submitted by a Bidding Consortium the financial requirement shall be met individually and collectively by all the Members in the Bidding Consortium. The financial requirement to be met by each Member of the Bidding Consortium shall be computed in proportion to the equity commitment made by each of them for investment in the Project.

2.1.4 The Bidder may seek qualification on the basis of technical and financial capability of its Parent and/ or its Affiliate(s) for the purpose of meeting the Qualification Requirements. However, in the case of the Bidder being a Consortium, the Lead Member has to meet the technical requirement on its own or by seeking the technical capability of its Parent and/or its Affiliate(s). Authorization for use of such technical or financial capability shall have to be provided from its Parent and/or Affiliate(s) as per Annexure 9. The technical and financial capability of a particular company/ particular project, including its Parents and/or Affiliates, shall not be used directly or indirectly by more than one Bidder/ Member of a Bidding Consortium/ Bidding Company. However, development and construction experience of a particular project may be used by more than one company.

The determination of the relationship of Parent or Affiliate with the Bidding Company or with the Member of the Bidding Consortium, including the Lead Member, shall be on the date at the most seven (7) days prior to the last date of submission of the Bid. Documentary evidence to establish such relationship shall be furnished by the Bidder along with the Technical Bid.

If the Technically Evaluated Entity and/or Financially Evaluated Entity is an entity other than the Bidding Company or a Member in a Bidding Consortium, the Bidding Company or Member relying on such Technically Evaluated Entity and/or Financially Evaluated Entity will have to submit a legally binding undertaking supported by a board resolution from the Technically Evaluated Entity and/or Financially Evaluated Entity or its Ultimate Parent Company, that all the equity investment obligations of the Bidding Company or the Member of the Consortium shall be deemed to be equity investment obligations of the Technically Evaluated Entity and/or Financially Evaluated Entity or its Ultimate Parent Company, and in the event of any default the same shall be met by such evaluated entity or by or the Ultimate Parent Company. The Bidding Company or the Consortium Member shall have to provide information and documents relating to its relationship with such

Technically Evaluated Entity and/or Financially Evaluated Entity including details about the equity shareholding between them as per Annexure 7(C).

2.1.5 A Bidder shall submit only one Bid in the same bidding process, either individually as Bidding Company or as a Member of a Bidding Consortium (including the Lead Member). It is further clarified that any of the Parent/ Affiliate/Ultimate Parent of the Bidder/ Member in a Bidding Consortium shall not separately participate directly or indirectly in the same bidding process. Further, if any Bidder is having a Conflict of Interest with other Bidders participating in the same bidding process, the Bids of all such Bidders shall be rejected.

2.1.6 Notwithstanding anything stated above, BPC reserves the right to verify the authenticity of the documents submitted for meeting the Qualification Requirements and request for any additional information and documents. BPC reserves the right at its sole discretion to contact the Bidder's bank and project references and verify the Bidder's information and documents for the purpose of bid evaluation.

2.1.7 The Qualified Bidder(s) will be required to continue to maintain compliance with the Qualification Requirements throughout the bidding process and till execution of the Transmission Service Agreement. Where the Technically Evaluated Entity and/or the Financially Evaluated Entity is not the Bidding Company or a Member in a Bidding Consortium, as the case may be, the Bidding Company or Member shall continue to be an Affiliate of the Technically Evaluated Entity and/or Financially Evaluated Entity till the execution of the Transmission Service Agreement. Failure to comply with the aforesaid provisions shall make the Bid liable for rejection at any stage.

2.1.8 The Selected Bidder will be required to continue to maintain compliance with the Qualification Requirements till the COD of the Project. Where the Technically Evaluated Entity and/or the Financially Evaluated Entity is not the Bidding Company or a Member in a Bidding Consortium, as the case may be, the Bidding Company or Member shall continue to be an Affiliate of the Technically Evaluated Entity and/or Financially Evaluated Entity till the COD of the Project. Failure to comply with the aforesaid provisions shall be dealt as per provisions of Transmission Service Agreement.

2.1.9 On the Bid Deadline, for the Bidder to be eligible to participate in the bidding process:

a. the Bidder & any of its Affiliate including any Consortium Member & any of its Affiliate, their directors or key personnel should not have been barred or included in the blacklist by any government agency or authority in India, the government of the jurisdiction of the Bidder or Members where they are incorporated or the jurisdiction of their principal place of business, any international financial institution such as the World Bank Group, Asian Development Bank, African Development Bank, Inter- American Development Bank, Asian Infrastructure Investment Bank etc or the United Nations or any of its agencies; or

b. the Bidder & any of its Affiliate including any Consortium Member & any of its Affiliate or their directors should not have been convicted of any offence in India or abroad.

In case any investigation is pending against the Bidder, including any Consortium Member or Affiliate, or CEO or any of the directors/ manager/key managerial personnel

of the Bidder /Consortium /Member or their Affiliates, full details of such investigation including the name of the investigating agency, the charge/offence for which the investigation has been launched, name and designation of persons against whom the investigation has been launched and other relevant information should be disclosed while submitting the Bid.

The Bidders shall confirm the above though a notarized affidavit as per Annexure 22.

2.2 Submission of Bid by the Bidder

2.2.1 The information and documents in Technical Bid will be submitted by the Bidder as per the formats specified in Section – 4 (Formats for RFP) of this document

2.2.2 Strict adherence to the formats wherever specified, is required. Wherever, information has been sought in specified formats, the Bidder shall refrain from referring to brochures/ pamphlets. Non-adherence to formats and/ or submission of incomplete information may be a ground for declaring the Technical Bid as non-responsive. Each format has to be duly signed and stamped by the authorized signatory of Bidder.

2.2.3 The Technical Bid shall contain unconsolidated/consolidated audited annual accounts (consisting of unabridged Balance Sheet, Profit and Loss Account, profit appropriation account, Auditors Report, etc.), as the case may be, of Bidding Company or each Member in Consortium including Lead Member or the Financially Evaluated Entity for the last three (3) financial years immediately preceding the last date for submission of Bid for the purpose of calculation of Networth.

In case the annual accounts for the financial year immediately preceding the Bid Deadline is not audited, the Bidder shall give declaration in this regard duly certified by its statutory auditor. In such a case, the Bidder shall provide the audited annual accounts for the three (3) financial years preceding the financial year as above for which the annual accounts have not been audited.

2.2.4 <u>Bid submitted by a Bidding Consortium:</u>

2.2.4.1 The Technical Bid shall contain a legally enforceable Consortium Agreement entered amongst the Members in the Bidding Consortium, designating one of the Members to be the Lead Member (as per Annexure 6). There shall be only one Lead Member which shall continue to hold twenty six percent (26%) equity in the TSP and cannot be changed upto one (1) year from the Commercial Operation Date (COD) of the Project. Each Member in Bidding Consortium shall duly sign the Consortium Agreement making it liable for raising the required funds for its respective equity investment commitment as specified in the Consortium Agreement. In absence of Consortium Agreement, the Technical Bid will not be considered for evaluation and will be rejected.

Provided that the Lead Member of the Bidding Consortium will be required to be liable to the extent of 100% of the total proposed commitment of equity investment of the Bidding Consortium i.e. for both its own equity contribution as well as the equity contribution of other Members.

Provided further that the Consortium Agreement shall not be amended without the explicit approval of the BPC.

The Lead Member of the Consortium will be the single point of contact for the purposes of the bid process before the date of signing of Share Purchase Agreement. Settlement of any dispute amongst the Consortium Members shall not be the responsibility of the BPC and/or the CTU and the BPC and/or the CTU shall not bear any liability whatsoever on this account.

2.2.4.2 The Lead Member should designate at the most two persons to represent the Consortium in its dealings with the BPC. The person(s) designated by the Lead Member should be authorized through a Power of Attorney (as per Annexure 3) to perform all tasks including, but not limited to providing information, responding to enquiries, signing of Technical Bid on behalf of the Consortium, etc. The Bidding Consortium shall provide board resolutions from their respective Boards for committing their respective portion of equity requirement for the Project. Additionally, the Lead member shall provide a Board resolution committing to make good any shortfall in the equity for the project, in case of any member not meeting its equity commitment.

2.2.4.3 The Technical Bid should also contain signed Letter of Consent (as per Annexure 2) from each Member in Consortium confirming that the entire Technical and Financial Bids has been reviewed and each element of the Technical and Financial Bids is agreed to by them including investment commitment for the Project.

In addition, the Technical Bid should also contain Board Resolution from each Member of the Consortium other than the Lead Member in favour of their respective authorized representatives for executing the POA, Consortium Agreement and signing of the requisite formats.

2.2.5 Bid submitted by a Bidding Company

2.2.5.1 The Bidding Company should designate at the most two persons to represent the Bidding Company in its dealings with BPC. The person(s) should be authorized to perform all tasks including, but not limited to providing information, responding to enquiries, signing of Technical and Financial Bids etc. The Bidding Company should submit, along with Technical Bid, a Power of Attorney (as per Annexure 3), authorizing the signatory of the Technical and Financial Bids. The Bidding Company shall submit the board resolution committing 100% of equity requirement for the Project, in the Technical Bid.

2.3 Clarifications & Pre-Bid Meeting

2.3.1 The Bidders may seek clarifications or suggest amendments to the RFP by sending an email to the BPC at the email id indicated in Clause 2.14 within the date and time mentioned in Clause 2.7.2. For any such clarifications or amendments, the Bidders should adhere to the format as per Annexure – 19.

2.3.2 Only those Bidders or their authorized representatives, who have purchased the RFP documents are invited to attend the pre-bid meeting(s), which will take place on date as specified in Clause 2.7.2, or any such other date as notified by the BPC. The time and address of this would be intimated later.

2.3.3 The purpose of the pre-bid meeting will be to clarify any issues regarding the RFP, including in particular, issues raised in writing by the Bidders as per the provisions of Clause 2.3.1.

2.3.4 Non-attendance at the pre-bid meeting will not be a cause for disqualification of a Bidder.

2.3.5 The BPC is not under any obligation to entertain / respond to suggestions made or to incorporate modifications sought for.

2.3.6 In case Bidders need any further clarifications not involving any amendments in respect of final RFP, they should ensure that request for such clarification is submitted through e-mail to the BPC at least ten (10) days prior to the Bid Deadline as mentioned in Clause 2.7.1. The BPC may issue clarifications only, as per its sole discretion, which is considered reasonable by it. Any such clarification issued shall be sent to all the Bidders to whom the RFP has been issued. Clarifications sought after this date shall not be considered in any manner and shall be deemed not to have been received. There shall be no extension in Bid Deadline on account of clarifications sought as per this clause 2.3.6.

2.4 Amendment of RFP

2.4.1. At any time before the timeline mentioned in Clause 2.7.1, the BPC may, for any reason, whether at its own initiative or in response to clarifications requested by any Bidder modify or amend the RFP, including the timelines specified in Clause 2.7.2 by issuance of addendum/modification/errata and/or revised document. Such document shall be notified in writing through a letter or fax or e-mail to all the entities to which the RFP has been issued and shall be binding on them. In order to ensure that Bidders have reasonable time to take the modification into account in preparing their Bid, or for any other reasons, BPC may at its discretion, extend the due date for submission of Bid. Late receipt of any addendum/modification/errata and/or revised document will not relieve the Bidder from being bound by that modification.

2.4.2. All modifications shall become part of the terms and conditions of this RFP. No interpretation, revision or communication regarding this RFP is valid, unless made in writing.

2.4.3. The amendment to the RFP shall be notified to all the Bidders through the electronic bidding platform and shall be binding on them.

2.5 The Bidding Process

The entire bidding process shall be conducted on electronic bidding platform created by MSTC Limited. The Bid shall comprise of the Technical Bid and the Financial Bid. The Bidders shall submit the Technical Bid & Financial Bid through the electronic bidding platform. In addition to the online submission, the Bidder with lowest Final Offer will be required to submit original hard copies of Annexure 3, Annexure 4 (if applicable), Annexure 6 (if applicable) and Annexure 14/14A/14B before issuance of LoI. There shall be no physical submission of the Financial Bid.

Evaluation of Technical Bid will be carried out considering the information and documents furnished by the Bidders as required under this RFP. This step would involve responsiveness check, technical and financial evaluation of the details/ documents furnished by the Bidding Company / Bidding Consortium in support of meeting the Qualification Requirements. Bidders meeting the Qualification Requirements, subject to evaluation as specified in Clause **3.2** to **3.4** shall be declared as "Qualified Bidders" and eligible for opening of Initial Offer. The BPC shall also upload the list of all Qualified Bidders and Non-Qualified Bidders

on the bidding portal along with the reasons for non- qualification. Also, the Financial Bids of Qualified Bidders shall be opened after at least 24 hours from the date of declaration of the Technically Qualified Bidders.

The Financial Bid will comprise of two rounds. In the first round the Initial Offer (submitted online along with the Technical Bids) of the responsive bids would be opened and Quoted Transmission Charges of Initial Offer shall be ranked on the basis of ascending order for determination of the Qualified Bidders as provided in Section-III of RFP. The Qualified Bidders, in the first fifty per cent of the ranking (with any fraction rounded off to higher integer) or four Qualified Bidders, whichever is higher, shall qualify for participating in the electronic reverse auction stage and submit their Final Offer.

Provided however, in case only one Bidder remains after the evaluation of Technical Bid as per Clause 3.2, 3.3 and Clause 3.4, the Initial Offer of such Bidder shall not be opened and the matter shall be referred to the Government.

Provided that in the event the number of qualified Technical Bids is between two and four, then each of the qualified Bidder shall be considered as "Qualified Bidders".

Provided that in the event of identical Quoted Transmission Charges discovered from the Initial Offer having been submitted by one or more Bidders, all such Bidders shall be assigned the same rank for the purposes of determination of Qualified Bidders. In such cases, all the Qualified Bidders who share the same rank till 50% of the rank (with any fraction rounded off to higher integer) determined above, shall qualify to participate in the electronic e-reverse auction stage. In case 50% of the ranks (with any fraction rounded off to higher integer) is having less than 4 (four) Bidders and the rank of the fourth (4th) Bidder is shared by more than one (1) Bidder, then all such Bidders who share the rank of the fourth (4th) Bidder shall qualify to participate in the electronic reverse auction.

The applicable ceiling for electronic reverse bidding shall be the lowest Quoted Transmission Charges discovered from the Initial Offer received from the Qualified Bidders. The Qualified Bidders shall be permitted to place their Final Offer on the electronic bidding platform, which is lower than zero point two five (0.25) % of the prevailing lowest Quoted Transmission Charges.

The initial period for conducting the e-reverse bidding should be 2 hours which will be extended by 30 minutes from the last received bid time, if the bid is received during the last 30 minutes of the scheduled or extended bid time. Subsequently, it will be extended again by 30 minutes from the latest received bid time.

The technical details with respect to access to such electronic platform are provided in Annexure-A (Technical Details with respect to electronic reverse auction).

In case of any technical clarification regarding access to the electronic reverse auction platform or conduct of the auction process, the Bidders may contact MSTC Limited directly at the address provided in Annexure-A.

2.5.1 Bid Formats

The Bids in response to this RFP will be submitted online through the electronic bidding platform by the Bidders in the manner provided in Clause 2.9. The Bids shall comprise of the following:

2.5.2 Technical Bid comprising of:

1. Covering Letter (as per prescribed format enclosed as **Annexure 1**);

2. Letter of Consent from Consortium Members in **Annexure 2;**

3. Power of attorney issued by the Bidding Company or the Lead Member of the Consortium, as the case may be, in favour of the person signing the Bid, in the format attached hereto as **Annexure 3**.

   Additionally, in case of a Bidding Consortium, the power of attorney in favour of the Lead Member issued by the other Members of the Consortium shall be provided in as per format attached hereto as **Annexure 4**. Further, the Lead Member shall furnish Board resolution(s) from each Member of the Consortium other than the Lead Member in favour of their respective authorized representatives for executing the POA and signing of the requisite formats.

   Provided that in the event the Bidding Company or the Lead Member of the Consortium or any Member of the Bidding Consortium, as the case may be, is a foreign entity, it may issue Board resolutions in place of power of attorney for the purpose of fulfilling these requirements.

4. Bidder's composition and ownership structure in **Annexure 5**

5. Format for Authorization submitted in Non-Judicial stamp paper duly notarized as per **Annexure 5** from the Bidding Company / each Member of the Consortium authorizing the BPC to seek reference from their respective bankers & others.

6. In case of Bidding Consortium, the Consortium Agreement shall be provided in as per format attached hereto as **Annexure 6**

7. Format of Qualification Requirement (**Annexures 7A, 7B, 7C and 7D)**

8. Bidders Undertakings and details of equity investment in Project (as per prescribed formats 1 and 2 of **Annexure 8**);

9. Authorization from Parent / Affiliate of Bidding Company / Member of Bidding Consortium whose technical / financial capability has been used by the Bidding Company / Member of Bidding Consortium **(Annexure 9)**.

10. Undertaking from the Technically / Financially Evaluated Entity(ies) **OR** Undertaking from the Ultimate Parent Company, for total equity investment commitment, in the prescribed format in **Annexure – 10**, to meet any shortfall in the equity investment by the Selected Bidder in the.....(Insert the name of SPV).

    Note: The effective Equity holding of the Selected Bidder in the ……

(Insert the name of SPV), as specified in Clause 2.5.8.1 shall be computed as per the provisions of Clause 2.5.8.3 of this RFP.

Provided further, in case the Bidding Company or Member of a Consortium, (as the case may be) holds at least twenty six percent (26%) equity in such Technically/ Financially Evaluated Entities, whose credentials have been considered for the purpose of meeting the Qualification Requirements as per the RFP, no such Undertaking shall be required from the Technically / Financially Evaluated Entities.

11. Board resolutions, as per prescribed formats enclosed as Annexure – 11, duly certified by the Company Secretary or any Whole-time Director / Manager (supported by a specific Board Resolution), as applicable to the Bidder and mentioned hereunder,

    (a) Board resolution from the Bidding Company (and any investing Affiliate / Parent Company / Ultimate Parent Company) committing one hundred percent (100%) in aggregate of the equity requirement for the Project - Format-1 of **Annexure 11**;

    (b) Board resolutions from each of the Consortium Member of the Bidding Consortium (and any investing Affiliate / Parent Company / Ultimate Parent Company) together committing to one hundred percent (100%) in aggregate of equity requirement for the Project, in case Bidder is a Bidding Consortium - Format-1 of **Annexure 11**;

    (c) In either of the cases as in (a) or (b) above as applicable, Board resolutions as per Format 2 of **Annexure 11** for total equity investment commitment from the Technically / Financially Evaluated Entity(ies) whose technical / financial credentials had been considered for the purpose of meeting Qualification Requirements as per the RFP

    OR

    Board resolutions as per Format 2 of **Annexure 11** from the Parent Company or the Ultimate Parent Company for total equity investment commitment.

    Provided that such Board resolutions, as specified in (a) or (b) or (c) above, in case of a foreign entity, shall be supported by an unqualified opinion issued by an independent legal counsel practicing in the relevant country, stating that the Board resolutions are in compliance with the applicable laws of the respective jurisdictions of the issuing company and the authorizations granted therein are true and valid.

    For clarity sake, illustrations identifying which Board Resolution shall be applicable in typical cases are provided in **Annexure 11A**.

12. Format for Illustration of Affiliates at the most seven (7) days prior to Bid Deadline, duly certified by Company Secretary and supported by documentary evidence **(Annexure 12)**.

Certified copy of the Register of Members / Demat Account Statement, Share Certificate, Annual Return filed with ROC etc. submitted as documentary evidence along with **Annexure 12.**

13. Disclosure as per **Annexure 13** regarding participation of any related companies in this bidding process.

14. Bid Bond, as per the prescribed format at **Annexure 14** or **Annexure 14A** or **Annexure 14B** (as applicable)

15. Checklist for Technical Bid submission requirements as per **Annexure 16**.

16. Last three (3) financial years' unconsolidated / consolidated audited annual accounts / statements, as the case may be, of the Financially Evaluated Entity / Technical Evaluated Entity

17. Unconsolidated audited annual accounts of both the TEE and the Bidding Company/Lead member, as applicable, for the financial years in which financial closure was achieved and the financial year in which the said project was completed / commissioned.

18. Copy of the Memorandum and Articles of Association and certificate of incorporation or other organizational document (as applicable), including their amendments, certified by the Company Secretary of Bidding Company or each Member in case of a Consortium including Lead Member.

19. For each project listed in Annexure 7(D), certified true copy of the certificates of final acceptance and / or certificates of good operating performance duly issued by owners or clients for the project, duly signed by duly signed by authorized signatory.

In addition to the online submission of above formats through the electronic platform, the Bidder with lowest Final Offer will be required to submit original hard copies of Annexure 3, Annexure 4 (if applicable), Annexure 6 (if applicable) and Annexure 14/14A/14B before issuance of LoI. In case, there is a discrepancy between the online submission and physical documents, the bid would be out rightly rejected and the bidder shall be construed to have engaged in the fraudulent practice as defined in Clause 2.19.3 with consequences as mentioned in Clause 2.19.2.

2.5.3 Financial Bid (as per prescribed format at Annexure-21)

Financial Bid shall comprise of: (i) the Initial Offer; and (ii) the Final Offer. The Initial Offer is required to be submitted along with the Technical Bid. It is hereby clarified that the Financial Bid will comprise of two rounds. In the first round the Initial Offer of the responsive bids would be opened and Quoted Transmission Charges of Initial Offer shall be ranked on the basis of ascending order for determination of the Qualified Bidders as provided in Section-III of RFP.

In accordance with clause 2.5 of this RFP, the qualified Bidders shall be eligible to participate in the electronic reverse auction and submit their Final Offer.

The applicable ceiling for electronic reverse bidding shall be the lowest Quoted Transmission Charges discovered from the Initial Offer received from the Qualified Bidders. The Qualified Bidders shall be permitted to place their Final Offer on the electronic bidding platform, which is lower than zero point two five (0.25) % of the prevailing lowest Quoted Transmission Charges.

The initial period for conducting the e-reverse bidding should be 2 hours which will be extended by 30 minutes from the last received bid time, if the bid is received during the last 30 minutes of the scheduled or extended bid time. Subsequently, it will be extended again by 30 minutes from the latest received bid time.

The Bidders shall inter-alia take into account the following while preparing and submitting the Initial Offer and Final Offer of Financial Bid:-

a. The Bidders shall quote single annual Quoted Transmission Charges for a period of 35 years commencing from the Scheduled COD of the Project.

b. The Quoted Transmission Charges as per the format at Annexure-21 shall be inclusive of all charges and no exclusions shall be allowed. The Bidders shall take into account all costs including capital and operating, statutory taxes, duties, levies. Availability of the inputs necessary for operation and maintenance of the Project should be ensured by the TSP at the Project site and all costs involved in procuring the inputs (including statutory taxes, duties, levies thereof) at the Project site must be included in the Quoted Transmission Charges.

c. Annexure 21 duly digitally signed by authorized signatory.

2.5.4 Wherever information has been sought in specified formats, the Bidders shall fill in the details as per the prescribed formats and shall refrain from referring to any other document for providing any information required in the prescribed format.

2.5.5 Transmission Charges

2.5.5.1. The Transmission Charges shall be specified in the Transmission Service Agreement and shall be payable to the TSP in Indian Rupees only. The Bidders shall quote single Transmission Charges as per the format at Annexure – 21.

2.5.5.2. The Transmission Charges of the Selected Bidder shall be inserted in Schedule 5 of the Transmission Service Agreement.

2.5.6 Bidders may note that:

a) All the information and documents in Bid shall be submitted in English language only.

b) Bidders shall mention the name, designation, telephone number, fax number, email address of the authorized signatory and complete address of the Bidder in the covering letter.

c) All pages of the Bid submitted shall be initialed and stamped by the authorized signatory on behalf of the Bidder.

d) A Bidder shall submit only one Bid in the same bidding process, either individually as Bidding Company or as a Member of a Bidding Consortium.

e) The technical and financial capability of a particular company / particular project (Parent and/ or Affiliate) shall not be used directly or indirectly by more than one Bidder/ Member of a Bidding Consortium including Lead Member / Bidding Company.

f) This Request for Proposal (RFP) document is not transferable. The RFP document and the information contained therein is for the use only by the Bidder to whom it is issued. It may not be copied or distributed by the recipient to third parties (other than in confidence to the recipient's professional advisors). In the event that the recipient does not continue with its involvement in the Project, this RFP document must be kept confidential.

g) Though adequate care has been taken while preparing this RFP document, the Bidder shall satisfy himself that the document is complete in all respects. Intimation of any discrepancy shall be given to the BPC immediately. If no intimation is received from any Bidder within ten (10) days from the date of issue of RFP document, it shall be considered that the RFP document is complete in all respects and has been received by the Bidder.

h) Bids submitted by the Bidder and opened on scheduled date and time as stipulated in this RFP shall become the property of the BPC and BPC shall have no obligation to return the same to the Bidder.

i) If any Bidder conceals any material information or makes a wrong statement or misrepresents facts or makes a misleading statement in its Bid, in any manner whatsoever, the BPC reserves the right to reject such Bid or cancel the Letter of Intent, if issued. If such event is discovered after the Effective Date, consequences specified in Transmission Service Agreement shall apply.

j) If for any reason the Bid of the Bidder with the lowest Quoted Transmission Charges is not selected or Letter of Intent issued to such Selected Bidder is cancelled or such Bidder withdraws its Bids, the BPC may:-

   i. Invite all the remaining Bidders to revalidate or extend their respective Bid Security, as necessary, and match the Bid of the Bidder with the lowest Quoted Transmission Charges (the "second round of bidding") with following cases:

      - If in the second round of bidding, only one Bidder matches the Bid of the Bidder with lowest Quoted Transmission Charges, it shall be the Selected Bidder.

      - If two or more Bidders match the Bid of the Bidder with the lowest Quoted Transmission Charges in the second round of bidding, then the Bidder whose Quoted Transmission Charges was lower as compared to other Bidder(s) in the first round of bidding shall be the Selected Bidder. For example, if the third and fifth lowest Bidders in the first round of bidding offer to match the Bid of the Bidder with lowest Quoted Transmission Charges in the second round of bidding, the said third lowest Bidder shall be the Successful Bidder.

- In the event that no Bidder offers to match the Bid of the Bidder with the lowest Quoted Transmission Charges in the second round of bidding, the BPC may, in its discretion, invite fresh Bids (the "third round of bidding") from all Bidders except the Bidder which quoted the lowest Quoted Transmission Charges in the first round of bidding. In case the Bidders are invited for the third round of bidding to revalidate or extend their Bid Security, as necessary, and offer fresh Bids, they shall be eligible for submission of fresh Bids provided, however, that in such third round of bidding only such Bids shall be eligible for consideration which are lower than the Quoted Transmission Charges of the second lowest Bidder in the first round of bidding; or;

ii. Annul the bid process; or

iii. Take any such measure as may be deemed fit in the sole discretion of the BPC[1]

k) The BPC may, at its sole discretion, ask for additional information / document and/or seek clarifications from a Bidder after the Bid Deadline, inter alia, for the purposes of removal of inconsistencies or infirmities in its Bid. However, no change in the substance of the Quoted Transmission Charges shall be sought or permitted by the BPC.

l) Non submission and/or submission of incomplete data/ information required under the provisions of RFP shall not be construed as waiver on the part of BPC of the obligation of the Bidder to furnish the said data / information unless the waiver is in writing.

m) Bidders shall familiarize itself with the procedures and time frames required to obtain all Consents, Clearances and Permits.

n) All Bidders are required to ensure compliance with the standards and codes mentioned in Clause 1.6.1.2.

o) BPC reserves the right to reject all Bids and/or annul the process of tariff based competitive bidding for selection of Bidder as TSP to execute the Project without assigning any reason. BPC shall not bear any liability, whatsoever, in this regard.

p) Foreign companies submitting the Bid are required to follow the applicable law in their country for execution of POA, Consortium Agreement and affixation of Common Seal (wherever required) and in such cases, their Bid should be supported by an unqualified opinion issued by an independent legal counsel practicing in the relevant country, stating that execution of such POA, Consortium Agreement and the authorizations granted therein are true and valid. Foreign companies executing POA outside India shall necessarily pay the adequate stamp charges in India as per the provisions of Stamp Act.

2.5.7 Bidders to inform themselves fully

2.5.7.1. The Bidders shall make independent enquiry and satisfy themselves with respect to all the required information, inputs, conditions and circumstances and factors that may have any effect on his Bid. Once the Bidders have submitted their Bids, the Bidders shall be

[1] **BPC shall record reasons for the same.**

deemed to have inspected and examined the site conditions (including but not limited to its surroundings, its geological condition and the adequacy of transport facilities to the site), the laws and regulations in force in India, the transportation facilities available in India, the grid conditions, the adequacy and conditions of roads, bridges, railway sidings, ports, etc. for unloading and/or transporting heavy pieces of material and has based its design, equipment size and fixed its price taking into account all such relevant conditions and also the risks, contingencies and other circumstances which may influence or affect the transmission of power. Accordingly, each Bidder acknowledges that, on being selected as Successful Bidder and on acquisition of one hundred percent (100%) of the equity shares of the …… (Insert the name of SPV), the TSP shall not be relieved from any of its obligations under the RFP Project Documents nor shall the TSP be entitled to any extension in Scheduled COD mentioned in this RFP or financial compensation for any reason whatsoever.

2.5.7.2. In their own interest, the Bidders are requested to familiarize themselves with all relevant laws of India, including without limitation, the Electricity Act 2003, the Income Tax Act 1961, the Companies Act, 1956 / Companies Act, 2013 (as the case may be), Environment Protection Act 1986 and Forest (Conservation) Act, 1980, the Customs Act, the Foreign Exchange Management Act, Land Acquisition Act, 1894, the Indian Telegraph Act 1885, Labor & Employment Laws of India, [Insurance Act] the regulations/standards framed by the Commissions and CEA, all other related acts, laws, rules and regulations prevalent in India, as amended from time to time.

In addition to the above, the Bidders are required to familiarize themselves with all relevant technical codes and standards, including but not limited to the Grid Code / State Grid Code, Central Electricity Authority (Installation and Operations of Meters) Regulations, 2006, Central Electricity Authority (Technical Standards for Connectivity to the Grid) Regulations, 2007, Central Electricity Regulatory Commission Grant of Connectivity, Long-term Access and Medium - Term Open Access in Inter-State Transmission and related matters) Regulations, 2009, Central Electricity Authority (Technical Standards for construction of Electrical Plants and Electric Lines) Regulation, 2010, Central Electricity Authority (Technical Standards for Communication System in Power System Operation) Regulations, 2020, Central Electricity Regulatory Commission (Sharing of Inter-State Transmission Charges and Losses) Regulations, 2020 and other relevant Rules/ Regulations/ Guidelines issued by the Central Government, the CERC and the CEA and amendments thereof.

The BPC shall not entertain any request for clarifications from the Bidders regarding the above laws / acts / rules / regulations / standards. Non-awareness of the same shall not be a reason for the Bidder to request for extension in Bid Deadline. The Bidders undertake and agree that, before submission of their Bid, all such factors as generally brought out above, have been fully investigated and considered while submitting their Bids.

2.5.7.3. The Survey Report has been prepared in good faith, and on best endeavor basis. Neither BPC & Nodal Agency nor their employees or advisors/consultants make any representation or warranty, express or implied, or accept any responsibility or liability, whatsoever, in respect of any statements or omissions made in the Survey Report, or the accuracy, completeness or reliability of information contained therein, and shall incur no liability under any law, statute, rules or regulations as to the accuracy, reliability or completeness of such Survey Report, even if any loss or damage is caused to the Bidders by any act or omission on their part.

2.5.7.4. Bidders shall make best efforts and carry out its own due diligence upon survey report provided by BPC and shall consider all possible techno-commercial factors before submission of Bid. Bidders may also visit the route of the Transmission Lines associated with the Project and the surrounding areas and obtain / verify all information which they deem fit and necessary for the preparation of their Bid. Bidders may also carry out required surveys and field investigation for submission of their Bid. Bidders may also opt for any other route and is not bound to follow the route suggested in survey report provided by BPC.

2.5.7.5. Failure to investigate, examine and to inspect site or subsurface conditions fully shall not be grounds for a Bidder to alter its Bid after the Bid Deadline nor shall it relieve a Bidder from any responsibility for appropriately eliminating the difficulty or costs of successfully completing the Project.

2.5.7.6. The Selected Bidder shall obtain all necessary Consents, Clearances and Permits as required. The Bidders shall familiarize itself with the procedures and time frame required to obtain such Consents, Clearances and Permits.

2.5.7.7. The technical requirements of integrated grid operation are specified in the Indian Electricity Grid Code (IEGC). The Bidders should particularly acquaint themselves with the requirements of connection conditions, operating code for regional grids, scheduling and dispatch instructions/codes, etc. The Bidders are also advised to fully familiarize themselves with the real time grid conditions in the country. Information regarding grid parameters such as voltage and frequency is available on the websites of Regional / State Load Despatch Centers.

2.5.8 Minimum Equity holding/Equity Lock-in

2.5.8.1. (a) The aggregate equity share holding of the Selected Bidder, in the issued and paid up equity share capital of.....(Insert the name of SPV) shall not be less than Fifty one percent (51%) up to a period of (1) one year after COD of the Project;

(b) In case the Selected Bidder is a Bidding Consortium, then any Member (other than the Lead Member) of such Bidding Consortium shall be allowed to divest its equity as long as the other remaining Members (which shall always include the Lead Member) hold the minimum equity specified in (a) above.

(c) If equity is held by the Affiliates, Parent Company or Ultimate Parent Company, then subject to the second proviso of this Clause 2.5.8.1 (c), such Affiliate, Parent Company or Ultimate Parent Company shall be permitted to transfer its shareholding in …… (Insert the name of SPV) to another Affiliate or to the Parent Company / Ultimate Parent Company. If any such shareholding entity, qualifying as an Affiliate / Parent Company / Ultimate Parent Company, is likely to cease to meet the criteria to qualify as an Affiliate / Parent Company / Ultimate Parent Company, the shares held by such entity shall be transferred to another Affiliate / Parent Company / Ultimate Parent Company.

Provided that in case the Lead Member or Bidding Company is holding equity through Affiliate/s, Ultimate Parent Company or Parent Company, such restriction shall apply to such entities.

Provided further, that the aggregate equity share holding of the Bidding Consortium or a Bidding Company in the issued and paid up equity share capital of …… (Insert the name of SPV) shall not be less than fifty one percent (51%) up to a period of one (1) year after COD of the Project and the lead Member of the Consortium shall have the equity share holding not less than twenty six percent (26%). In case the Selected Bidder is a Bidding Consortium, then any Member (other than the Lead Member) of such Bidding Consortium shall be allowed to divest its equity as long as the other remaining Members (which shall always include the Lead Member) hold the minimum equity specified in (a) above.

(d) All transfer(s) of shareholding of..... (Insert the name of SPV) by any of the entities referred to above, shall be after prior written intimation to the Nodal Agency.

2.5.8.2. The Selected Bidder may invest in the equity share capital of.....(Insert the name of SPV) through its Affiliate(s) or Ultimate Parent Company or Parent Company. Details of such investment will have to be specified in the Technical Bid as per Format 2 of Annexure 8 of the RFP. If the Selected Bidder so invests through any Affiliate(s) or Ultimate Parent Company or Parent Company, the Selected Bidder shall be liable to ensure that minimum equity holding/lock-in limits specified in Clause 2.5.8.1 and as computed as per the provisions of Clause 2.5.8.3 are still maintained.

2.5.8.3. For computation of effective Equity holding, the Equity holding of the Selected Bidder or its Ultimate Parent Company in such Affiliate(s) or Parent Company and the equity holding of such Affiliate (s) or Ultimate Parent Company in..... (Insert the name of SPV) shall be computed in accordance with the example given below:

If the Parent Company or the Ultimate Parent Company of the Selected Bidder A directly holds thirty percent (30%) of the equity in..... (Insert the name of SPV) then holding of Selected Bidder A in..... (Insert the name of SPV) shall be thirty percent (30%);

If Selected Bidder A holds thirty percent (30%) equity of the Affiliate and the Affiliate holds fifty percent (50%) equity in .....(Insert the name of SPV), then for the purposes of ascertaining the minimum equity/equity lock-in requirements specified above, the effective holding of Bidder A in.....(Insert the name of SPV) shall be fifteen percent (15%), (i.e., 30%* 50%);

2.5.8.4. The provisions as contained in this Clause 2.5.8 and Article 19.1 of the Transmission Service Agreement shall override the terms of the Consortium Agreement submitted by the Bidder as part of the RFP.

2.6 Project Schedule

2.6.1. All Elements of the Project are required to be commissioned progressively as per the schedule given in the following table:

Sl. No.	Name of the Transmission Element	Scheduled COD	% of Quoted Transmission Charges recoverable on Scheduled COD of the Element of the Project	Element(s) which are pre-required for declaring the commercial operation (COD) of the respective Element
1.	Establishment of 765/400 kV, 3x1500 MVA & 400/220 kV, 3x500 MVA Nasik S/s (towards South of Nasik) with 2x330 MVAr 765 kV bus reactor and 2x125 MVAr 400 kV bus reactor.	36 Months	100%	All the elements are required simultaneously to ensure their utilization
2.	South Olpad (GIS) – Nasik 765 kV D/C line			
3.	2 Nos. 765 kV line bays at South Olpad (GIS) S/s (Sec-II) for South Olpad – Nasik 765 kV D/C line.			
4.	765 kV, 240 MVAr Switchable line reactors on each circuit at both ends of South Olpad – Nasik 765 kV D/C line.			
5.	Nasik – Pimpalgaon (MSETCL) 400 kV D/C line (Quad ACSR/AAAC/AL59 moose equivalent) (*Line to be routed from near Sinner TPP / Raymond i.e. from eastern side of Nasik)*.			
6.	2 Nos. 400 kV line bays at Pimpalgaon S/s for Nasik – Pimpalgaon (MSETCL) 400 kV D/C line (Quad ACSR/AAAC/AL59 moose equivalent)			

Note: *Effective date as per TSA of present scheme shall be matched with the Effective date of "Common Transmission System for evacuation of power from Lakadia (Phase-II: 7.5 GW), Jam Khambhaliya (Phase-II: 5.5 GW) and Jamnagar (Phase-I: 1 GW)" Parts A & C. and "Transmission System for Integration of Power from RE Projects in Lakadia REZ in Gujarat-Phase II (7500 MW)".*

The payment of Transmission Charges for any Element irrespective of its successful commissioning on or before its Scheduled COD shall only be considered after successful commissioning of the Element(s) which are pre-required for declaring the commercial operation of such Element as mentioned in the above table.

Scheduled COD for overall Project: 36 months

Note: List of Element(s) along with the critical Element(s) to be provided by CEA.

2.7 Due dates

2.7.1. The Bidders should submit the Bids online through the electronic bidding platform before the Bid Deadline i.e. on or before 1600 hours (IST) on 06.07.2026. In addition to the online submission, the Bidder with lowest Final Offer will be required to submit original hard copies of Annexure 3, Annexure 4 (if applicable), Annexure 6 (if applicable) and Annexure 14/14A/14B before issuance of LoI.

2.7.2. Important timelines are mentioned below:

Date	Event
04.05.2026	Issuance of RFP
25.05.2026	Submission of written clarifications/amendments, if any, on the RFP / RFP Project Documents by Bidders so as to reach BPC by 1700 hours. Such written clarifications/amendments shall be in the format provided in Annexure-20.
28.05.2026	Pre-Bid meeting(s)
11.06.2026	Issue of written clarifications and revised RFP documents
22.06.2026	Issue of final RFP Project Documents
06.07.2026	Submission of Bid (Online submission of Bid through electronic bidding portal)
06.07.2026	Opening of Technical Bid
14.07.2026	Short listing and announcement of Qualified Bidders on bidding portal
15.07.2026	Opening of Financial Bid - Initial Offer
16.07.2026	Electronic reverse auction (Financial Bid – Final Offer) for the Qualified Bidders.
21.07.2026	Submission of original hard copies of Annexure 3, Annexure 4, Annexure 6, as applicable and Annexure 14/14A/14B by the bidder with lowest Final Offer
24.07.2026	Selection of Successful Bidder and issue of LOI
03.08.2026	Signing of RFP Project Documents and transfer of …… (Insert the name of SPV)

2.7.3. To enable BPC to meet the schedule, all Bidders are expected to respond expeditiously during the bidding process. If any milestone/activity falls on a day which is not a working day or which is a public holiday then the milestone/activity shall be achieved/ completed on the next working day.

2.8 Validity of the Bid

2.8.1. The Bid shall remain valid for a period of one hundred and eighty (180) days from the Bid Deadline. The BPC reserves the right to reject any Bid which does not meet aforementioned validity requirement.

2.8.2. The BPC may solicit the Bidders' consent for an extension of the period of validity of the Bid. The request and the response, thereafter, shall be in writing. In the event any Bidder refuses to extend its Bid validity as requested by the BPC, the BPC shall not be entitled to invoke the Bid Bond. A Bidder accepting the BPC's request for validity extension shall

not be permitted to modify its Bid and such Bidder shall, accordingly, extend the validity of the Bid Bond as requested by the BPC within seven (7) days of such request, failing which the Bid shall not be considered as valid.

2.9 Method of Submission

2.9.1. Both the Technical and Financial Bids duly filled in, all formats and supporting shall be scanned and uploaded online through electronic bidding platform in the manner specified in Annexure A

2.9.2. It may be noted that Technical Bid shall not contain any information/document relating to Financial Bid. If Technical Bid contains any such information/documents, the BPC shall not be responsible for premature opening of the Financial Bid.

All pages of the Bid, except for the Bid Bond (Annexure 14/14A/14B) and any other document executed on non-judicial stamp paper, forming part of the Bid and corrections in the Bid, if any, must be signed by the authorized signatory on behalf of the Bidder. It is clarified that the same authorized signatory shall sign all pages of the Bid. However, any published document submitted in this regard shall be signed by the authorized signatory at least on the first and last page of such document.

2.9.3. No change or supplemental information to a Bid already submitted will be accepted after the Bid Deadline, unless the same is requested for by the BPC as per Clause 2.5.6 (k).

Provided that a Bidder shall always have the right to withdraw / modify its Bid before the Bid Deadline. No Technical Bid or Initial Offer shall be modified, substituted or withdrawn by the Bidder on or after the Bid Deadline.

2.10 Preparation cost

2.10.1. The Bidders shall be responsible for all the costs associated with the preparation of the Bid and participation in discussions and attending pre-bid meetings, and finalization and execution of the RFP Project Documents (other than the TSA), etc. BPC shall not be responsible in any way for such costs, regardless of the conduct or outcome of the process of tariff based competitive bidding for selection of Bidder as TSP as per Bidding Guidelines.

2.10.2. The cost of this RFP is Rupees Five Lakh Only (Rs. 5,00,000) or U.S. Dollar Seven Thousand Only (US$ 7,000) plus GST as per applicable rate, which shall be non-refundable. This amount shall be paid via electronic transfer to the following Bank Account:

Bank Name, Address & Branch	ICICI Bank 9A, Phelps Building, Inner Circle, Connaught Place, New Delhi-110001
Bank Account Name	REC Power Development & Consultancy Limited
Bank Account No	000705041275
Bank IFSC Code No	ICIC0000007

Immediately after issuance of RFP document, the Bidder shall submit the Pre-Award Integrity Pact in the format as prescribed in Annexure B, which shall be applicable for and during the bidding process, duly signed on each page by any whole-time Director / Authorized Signatory, duly witnessed by two persons, and shall be submitted by the Bidder in two (2) originals in a separate envelope, duly superscripted with Pre-Award Integrity Pact. The Bidder shall submit the Pre-Award Integrity Pact on non-judicial stamp paper of Rs. 100/- each duly

purchased from the National Capital Territory of Delhi. In case the Bidder is in a consortium, the Pre-Award Integrity Pact shall be signed and submitted by each member of the Consortium separately.

2.11 Bid Bond

2.11.1. Each Bidder shall submit the Bid accompanied by Bid Bond issued by any of the Banks listed in Annexure-17. The Bid Bond shall be valid for a period of thirty (30) days beyond the validity of the Bid.

2.11.2. Subject to the provisions of Clause 2.15.5, the Bid Bond may be invoked by the BPC or its authorized representative, without any notice, demure, or any other legal process upon occurrence of any of the following:

- Bidder withdraws during the period of Bid Validity as specified in this RFP or as extended by mutual consent of the respective Bidder(s) and the BPC
- Failure to execute the Share Purchase Agreement as per the provisions of Clause 2.15.2; or
- Failure to furnish the Contract Performance Guarantee as per Clause f; or
- Failure to acquire one hundred percent (100%) equity shares of …… (Insert the name of SPV), along with all its related assets and liabilities, in accordance with the provisions of Clause 2.15.2; or
- Failure to comply with the provisions of Clause 2.15.5 and Clause 2.15.6, leading to annulment of the award of the Project.
- Bidders submitting any wrong information or making any misrepresentation in their Bid as mentioned in Clause 2.5.6.

Intimation of the reasons of the invocation of the Bid Bond shall be given to the Selected Bidder by the BPC within three (3) working days after such invocation.

2.11.3. The Bid Bond of the Selected Bidder shall be returned on submission of the Contract Performance Guarantee as per Clause 2.12 and the relevant provisions of the Transmission Service Agreement.

2.11.4. The Bid Bond of all the Bidders, whose Bids are declared non-responsive, shall be returned within a period of thirty (30) days after the date on which the Financial Bids are opened.

2.11.5. The Bid Bond of all unsuccessful Bidders shall be returned and released by the BPC on the same day on which the.....(Insert the name of SPV) is transferred to the Selected Bidder. The Bid Bond of the Successful Bidder shall be returned on submission of Contract Performance Guarantee as per Clause 2.12 of this RFP and the provisions of the Transmission Service Agreement.

2.12 Contract Performance Guarantee

Within ten (10) days from the date of issue of the Letter of Intent, the Selected Bidder, on

behalf of the TSP, will provide to the Nodal Agency the Contract Performance Guarantee for an amount of **Rs. 90.00 Crore (Rupees Ninety Crores)**. The Contract Performance Guarantee shall be initially valid for a period up to three (3) months after the Scheduled COD of the Project and shall be extended from time to time to be valid for a period up to three (3) months after the COD of the Project and thereafter shall be dealt with in accordance with the provisions of the Transmission Service Agreement. The Contract Performance Guarantee shall be issued by any of the banks listed in Annexure-17 as per format given at Annexure- 15 or any of the insurance companies authorized by Insurance Regulatory and Development Authority of India as per format given at Annexure – 15A or PFC/ REC/ IREDA as per Payment on Order Instrument format given at Annexure -15B**.**

2.12.1. In case the Selected Bidder is unable to obtain the Contract Performance Guarantee for the total amount from any one bank specified in Annexure-17, the Selected Bidder may obtain the same from not more than three (3) banks specified in Annexure-17.

2.13 Opening of Bids

2.13.1. Technical Bid will be opened by the Bid Opening Committee as per the following time schedule and in the office of Central Electricity Authority, in the online presence of Bidders' representatives who wish to attend:

Opening of Envelope (Technical Bid): 1630 hours (IST) on 06.07.2026

or such other dates as may be intimated by BPC to the Bidders.

In the event of any of above dates falling on a day which is not a working day or which is a public holiday, then the bids shall be opened on the next working day at the same venue and time.

Opening of Initial Offer: Initial Offer shall be opened by the Bid Opening Committee in presence of the Bid Evaluation Committee at 1630 hours (IST) on 15.07.2026 in the office of CEA.

2.13.2. The following information from each Bid will be read out to all the Bidders at the time of opening of Technical Bid:

- Name of the Bidding Company / Consortium Members in case of Bidding Consortium.

Information to be provided after opening of Initial Offer:

Only the lowest Initial Offer (s) shall be communicated to all the Qualified Bidders to participate in the e-reverse bidding process. During the e-reverse bidding process only the lowest prevailing bid should be visible to all the bidders on the electronic platform.

2.14 Enquiries

Written clarifications on the RFP and other RFP Project Documents as per Clause 2.3 and 2.4 may be sought from:

Chief Executive Officer,
REC Power Development and Consultancy Limited
(A wholly owned subsidiary of REC Limited)

REC Corporate Head Quarter,
D Block, Plot No. I – 4,
Sec – 29 Gurugram – 122 001
Email: vijay.kulkarni@recpdcl.in & tbcb@recpdcl.in

2.15 Other Aspects

2.15.1. The draft of the Transmission Service Agreement has been attached to this RFP. In addition to above, the following documents have also been attached to this RFP:

a) Share Purchase Agreement

When the drafts of the above RFP Project Documents are provided by the BPC, these RFP Project Documents shall form part of this RFP as per Formats – 1 & 2 of Annexure 20.

Upon finalization of the RFP Project Documents after incorporating the amendments envisaged in Clause 2.4 of this RFP, all the finalized RFP Project Documents shall be provided by BPC to the Bidders at least fifteen (15) days prior to the Bid Deadline.

The Transmission Service Agreement and Share Purchase Agreement shall be signed in required number of originals so as to ensure that one (1) original is retained by each party to the Agreement(s) on the date of transfer of SPV.

2.15.2. Within ten (10) days of the issue of the Letter of Intent, the Selected Bidder shall:

a) provide the Contract Performance Guarantee in favour of the Nodal Agency as per the provisions of Clause 2.12;

b) execute the Share Purchase Agreement and the Transmission Service Agreement;

c) acquire, for the Acquisition Price, one hundred percent (100%) equity shareholding of …… (Insert the name of SPV) from REC Power Development and Consultancy Limited, who shall sell to the Selected Bidder, the equity shareholding of..... (Insert the name of SPV), along with all its related assets and liabilities;

Stamp duties payable on purchase of one hundred percent (100%) of the equity shareholding of..... (Insert the name of SPV), along with all its related assets and liabilities, shall also be borne by the Selected Bidder.

Provided further that, if for any reason attributable to the BPC, the above activities are not completed by the Selected Bidder within the above period of ten (10) days as mentioned in this Clause, such period of ten (10) days shall be extended, on a day for day basis till the end of the Bid validity period.

2.15.3. After the date of acquisition of the equity shareholding of..... (Insert the name of SPV), along with all its related assets and liabilities, by the Selected Bidder,

i. the authority of the BPC in respect of this Bid Process shall forthwith cease and any actions to be taken thereafter will be undertaken by the Nodal Agency,

ii. all rights and obligations of..... (Insert the name of SPV), shall be of

the TSP,

iii. any decisions taken by the BPC prior to the Effective Date shall continue to be binding on the Nodal Agency and

iv. contractual obligations undertaken by the BPC shall continue to be fulfilled by the TSP.

v. Further, the TSP shall execute the Agreement(s) required, if any, under Central Electricity Regulatory Commission (Sharing of Inter-State Transmission Charges and Losses) Regulations as amended from time to time.

2.15.4. Within five (5) working days of the issue of the acquisition of the SPV by the Successful Bidder, the TSP shall apply to the Commission for grant of Transmission License and make an application to the Commission for the adoption of Transmission Charges, as required under Section – 63 of The Electricity Act 2003.

2.15.5. If the Selected Bidder / TSP fails or refuses to comply with any of its obligations under Clauses 2.15.2, 2.15.3 and 2.15.4, and provided that the other parties are willing to execute the Share Purchase Agreement and REC Power Development and Consultancy Limited is willing to sell the entire equity shareholding of..... (Insert the name of SPV), along with all its related assets and liabilities, to the Selected Bidder, such failure or refusal on the part of the Selected Bidder shall constitute sufficient grounds for cancellation of the Letter of Intent. In such cases, the BPC / its authorized representative(s) shall be entitled to invoke the Bid Bond of the Selected Bidder.

2.15.6. If the TSP fails to obtain the Transmission License from the Commission, it will constitute sufficient grounds for annulment of award of the Project.

2.15.7. The annulment of award, as provided in Clauses 2.15.5 and 2.15.6 of this RFP, will be done by the Government on the recommendations of National Committee on Transmission. However, before recommending so, National Committee on Transmission will give an opportunity to the Selected Bidder / TSP to present their view point.

2.15.8. The annulment of the award, under Clause 2.15.5 or 2.15.6 of this RFP, shall be sufficient grounds for blacklisting the bidder, whose award has been annulled, for a period of five years or more, as decided by the National Committee on Transmission, provided that the blacklisting shall be done only after giving the bidder an opportunity for showing cause.

2.16 Confidentiality

2.16.1. The parties undertake to hold in confidence this RFP and RFP Project Documents and not to disclose the terms and conditions of the transaction contemplated hereby to third parties, except:

a) to their professional advisors;

b) to their officers, contractors, employees, agents or representatives, financiers, who need to have access to such information for the proper performance of their activities;

c) disclosures required under Law, without the prior written consent of the other parties

of the concerned agreements.

Provided that the TSP agrees and acknowledges that the Nodal Agency may at any time, disclose the terms and conditions of the RFP and RFP Project Documents to any person, to the extent stipulated under the Law or the Bidding Guidelines.

2.17 Right of the BPC to reject any Bid

BPC reserves the right to reject all or any of the Bids/ or cancel the RFP without assigning any reasons whatsoever and without any liability.

2.18 Non submission and/or submission of incomplete data/ information required under the provisions of RFP shall not be construed as waiver on the part of BPC of the obligation of the Bidder to furnish the said data / information unless the waiver is in writing.

2.19 Fraudulent and Corrupt Practices

2.19.1. The Bidders and their respective officers, employees, agents and advisers shall observe the highest standard of ethics during the Bid process and subsequent to the issue of the LoI Notwithstanding anything to the contrary contained herein, or in the LoI, the BPC shall reject a Bid, withdraw the LoI, as the case may be, without being liable in any manner whatsoever to the Bidder, if it determines that the Bidder has, directly or indirectly or through an agent, engaged in corrupt practice, fraudulent practice, coercive practice, undesirable practice or restrictive practice in the Bid process. In such an event, the BPC shall forfeit the Bid Bond, without prejudice to any other right or remedy that may be available to the BPC hereunder or otherwise.

2.19.2. Without prejudice to the rights of the BPC under Clause 2.19.1 hereinabove and the rights and remedies which the BPC may have under the LoI, if a Bidder is found by the BPC to have directly or indirectly or through an agent, engaged or indulged in any corrupt practice, fraudulent practice, coercive practice, undesirable practice or restrictive practice during the Bid process, or after the issue of the LoI, such Bidder & its Affiliates shall not be eligible to participate in any tender or RFP issued by any BPC for an indefinite period from the date such Bidder is found by the BPC to have directly or indirectly or through an agent, engaged or indulged in any corrupt practice, fraudulent practice, coercive practice, undesirable practice or restrictive practices, as the case may be.

2.19.3. For the purposes of this Clause 2.19, the following terms shall have the meaning hereinafter respectively assigned to them:

a) **"Corrupt practice"** means (i) the offering, giving, receiving, or soliciting, directly or indirectly, of anything of value to influence the actions of any person connected with the Bid process (for avoidance of doubt, offering of employment to or employing or engaging in any manner whatsoever, directly or indirectly, any official of the BPC who is or has been associated or dealt in any manner, directly or indirectly with the Bid process or the LoI or has dealt with matters concerning the Transmission Service Agreement or arising there from, before or after the execution thereof, at any time prior to the expiry of one year from the date such official resigns or retires from or otherwise ceases to be in the service of the BPC, shall be deemed to constitute influencing the actions of a person connected with the Bid Process); or (ii) engaging in any manner whatsoever, whether during the Bid Process or after the issue of the LoI or after the execution of the Transmission Service Agreement, as the

case may be, any person in respect of any matter relating to the Project or the LoI or the Transmission Service Agreement, who at any time has been or is a legal, financial or technical adviser of the BPC in relation to any matter concerning the Project;

b) **"Fraudulent practice"** means a misrepresentation or omission of facts or suppression of facts or disclosure of incomplete facts, in order to influence the Bid process;

c) **"Coercive practice"** means impairing or harming, or threatening to impair or harm, directly or indirectly, any person or property to influence any person's participation or action in the Bid process;

d) **"Undesirable practice"** means (i) establishing contact with any person connected with or employed or engaged by the BPC with the objective of canvassing, lobbying or in any manner influencing or attempting to influence the Bid process; or (ii) having a Conflict of Interest; and

e) **"Restrictive practice"** means forming a cartel or arriving at any understanding or arrangement among Bidders with the objective of restricting or manipulating a full and fair competition in the Bid process.

SECTION - 3

EVALUATION OF THE TECHNICAL AND FINANCIAL BID

SECTION 3

1. EVALUATION OF BID

3.1. The evaluation process of Technical Bid comprises the following five steps:

Step I – Responsiveness check
Step II- Compliance with submission requirements
Step III– Evaluation of Technical Bids
Step IV– Evaluation of Financial Bids
Step V – Bidder Selection

3.2. STEP I – Responsiveness check

The Technical Bid submitted by the Bidder shall be initially scrutinized to establish "Responsiveness". Subject to clause 2.5.6 (k), any of the following conditions shall cause the Technical Bid to be "Non-responsive":

a) Technical Bid that are incomplete.

b) Technical Bid not signed by authorized signatory and / or stamped in the manner indicated in this RFP.

c) All pages of the Technical Bid submitted but not initialed by the authorized signatories on behalf of the Bidder.

d) Technical Bid not including the covering letter as per Annexure 1.

e) Technical Bid submitted by a Bidding Consortium not including the Consortium Agreement.

f) Technical Bid contains material inconsistencies in the information and documents submitted by the Bidder, affecting the Qualification Requirements.

g) Bidder submitting or participating in more than one Bid either as a Bidding Company or as a Member of Bidding Consortium.

h) More than one Member of the Bidding Consortium or a Bidding Company using the credentials of the same Parent/Affiliate.

i) Information not submitted in formats specified in the RFP.

j) Applicable Board resolutions, or any other document, as provided in Clause 2.5.2, not being submitted;

k) Bid not accompanied by a valid Bid Bond;

l) Non submission of power of attorney, supported by a Board resolution;

m) Bid validity being less than that required as per Clause 2.8 of this RFP;

n) Bid not containing Format-1 (Bidders' Undertakings) of Annexure-8;

o) Bidder having Conflict of Interest

p) The Bidder has not submitted a disclosure as per Annexure 13.

q) Bidders delaying in submission of additional information or clarifications sought by the BPC.

r) If the Bidder makes any misrepresentation as specified in Clause 3.7.

s) Bid being conditional in nature.

t) More than one Member of the Bidding Consortium or a Bidding Company using the credentials of the same Parent/Affiliate.

3.3. STEP II - Compliance with submission requirements

Each Bidder's Technical Bid shall be checked for compliance with the submission requirements set forth in this RFP before the evaluation of Technical Bid is taken up. Annexure 16 and Annexure 11A shall be used to check whether each Bidder meets the stipulated requirements.

3.4. STEP III -Evaluation of Technical Bid

Evaluation of Technical Bid will be carried out considering the information and documents furnished by the Bidders as required under this RFP. This step would involve technical and financial evaluation of the details/ documents furnished by the Bidding Company / Bidding Consortium in support of meeting the Qualification Requirements

3.4.1. Interpolation of financial data.

For the Qualification Requirements data provided by the Bidders in foreign currency, equivalent rupees of Net-worth will be calculated using bills selling exchange rates (card rate) USD/INR of State Bank of India prevailing on the date of closing of the accounts for the respective financial year as certified by their Banker.

For the purpose of calculating the aggregate capital expenditure/construction experience of the projects completed/ commissioned where such projects are executed outside India and capital expenditure is denominated in foreign currency, bills selling exchange rates (card rate) USD/INR of State Bank of India prevailing on the date of closing of the financial year in which the projects were completed and as certified by their Banker shall be considered.

For the projects executed in the current financial year bills selling (card rate) USD/INR of State Bank of India prevailing on seven (7) days prior to the last date of submission of Technical Bid and as certified by their Banker shall be considered.

For currency other than USD, Bidders shall convert such currency into USD as per the exchange rates certified by their Banker prevailing on the relevant date and used for such conversion. Such Bidders shall submit necessary certification from their Banker for the exchange rate used in the conversation.

If the exchange rate for any of the above dates is not available, the rate for the immediately available previous day shall be taken into account.

3.4.2. Bidders meeting the Qualification Requirements, subject to evaluation as specified in Clauses 3.2 to 3.4 shall be declared as Qualified Bidders and eligible for opening of Initial Offer.

3.4.3. The BPC shall upload the list of all Qualified Bidders and Non-Qualified Bidders on the bidding portal along with the reasons for non-qualification.

3.5. STEP IV - Evaluation of Financial Bids

3.5.1. The Bids which have been found Qualified by the BPC, based on the Steps I to III as specified above in Clauses 3.2.to 3.4, shall be opened and Quoted Transmission Charges of such Initial Offer shall be ranked on the basis of the ascending Initial Offer submitted by each Qualified Bidder.

Based on such ranking of the Qualified Bidders, in the first fifty per cent of the ranking (with any fraction rounded off to higher integer) or four Qualified Bidders, whichever is higher, shall qualify for participating in the electronic reverse auction.

Provided however, in case only one Bidder remains after the Evaluation of Technical Bid (Steps 1 to III) as per Clause 3.2 to 3.4, the Initial Offer of such Bidder shall not be opened and the matter shall be referred to the Government.

Provided that in the event the number of Qualified Bidders is between two and four, then each of the responsive Bidder shall be considered as Qualified Bidders.

Provided that in the event of identical Quoted Transmission Charges discovered from the Initial Offer having been submitted by one or more Bidders, all such Bidders shall be assigned the same rank for the purposes of determination of Qualified Bidders. In such cases, all Qualified Bidders who shares the same rank till 50% of the rank (with any faction rounded off to higher integer) determined above, shall qualify to participate in the electronic reverse auction stage. In case 50% of the rank is having less than four (4) Bidders and the rank of the fourth (4th) Bidder is shared by more than one Bidder, then all such all such Bidders who share the rank of the fourth Bidder shall qualify to participate in the electronic reverse auction.

3.5.2. The Financial Bids comprising of both Initial Offer and Final Offer submitted by the Bidders shall be scrutinized to ensure conformity with the provisions of Clause 2.5.3 of this RFP. Any Bid not meeting any of the requirements as per Clause 2.5.3 of this RFP may cause the Bid to be considered "Non-responsive", at the sole decision of the BPC. Financial Bid not in conformity with the requirement of SI. No. (c) of Clause 2.5.3 of this RFP shall be rejected.

3.5.3 The Bidders shall quote the single annual Quoted Transmission Charges as specified in the format at Annexure – 21.

3.6. STEP V - Bidder Selection

3.6.1. The prevailing lowest Quoted Transmission Charges discovered from Final Offers shall only be displayed during the e-reverse bidding and the Bidder quoting such Final Offer will always remain anonymous during the e-reverse bidding. The Bidder with the prevailing lowest Quoted Transmission Charges discovered from Final Offers at the close of the scheduled or extended period of e-reverse bidding as mentioned in clause 2.5 shall be declared as the Successful Bidder, subject to verification of the original hard copies of Annexure 3, Annexure 4 (if applicable), Annexure 6 (if applicable) and Annexure 14/14A/14B. The Letter of Intent shall be issued to such Successful Bidder in two (2) copies.

However, if no bid is received during the e-reverse bidding stage then the Bidder with lowest quoted initial transmission charges ("Initial Offer") during e-bidding stage shall be declared as the Successful Bidder, subject to verification of the original hard copies of Annexure 3, Annexure 4 (if applicable), Annexure 6 (if applicable) and Annexure 14/14A/14B. The Letter of Intent shall be issued to such Successful Bidder in two (2) copies.

In case, there is a discrepancy between the online submission and physical documents, the bid would be out rightly rejected and the bidder shall be construed to have engaged in the fraudulent practice as defined in Clause 2.19.3 with consequences as mentioned in Clause 2.19.2. Further, in such a case, the provisions of Clause 2.5.6 (j) shall apply.

3.6.2. The Selected Bidder shall unconditionally accept the LoI, and record on one (1) copy of the LoI, "Accepted unconditionally", under the signature of the authorized signatory of the Successful Bidder and return such copy to the BPC within seven (7) days of issue of LoI.

3.6.3. If the Successful Bidder, to whom the Letter of Intent has been issued, does not fulfill any of the conditions specified in Clauses 2.15.2, 2.15.3 and Clause 2.15.4, then subject to Clause 2.15.5, the BPC reserves the right to annul the award of the Project and cancel the Letter of Intent. Further, in such a case, the provisions of Clause 2.5.6 (j) shall apply.

3.6.4. The BPC, in its own discretion, has the right to reject all Bids if the Quoted Transmission Charges are not aligned to the prevailing prices.

3.7. Misrepresentation by the Bidder

If the Bidder conceals any material information or makes a wrong statement or misrepresents facts or makes a misleading statement in the Technical Bid or Bid, as the case may be, in any manner whatsoever, in order to create circumstances for the acceptance of its Technical Bid/Bid, the BPC reserves the right to reject such Technical Bid/Bid, and/ or cancel the Letter of Intent, if issued. Further, in case Letter of Intent is cancelled, consequences as per provisions of the RFP shall follow.

3.8. Disposition of Technical Bid

3.8.1. Technical Bid found to be Non-responsive as per Clause **3.2,** due to any of the following conditions, shall be liable for rejection.

- Technical Bid that is incomplete.
- Technical Bid not signed by authorized signatory and / or stamped in the manner indicated in this RFP.
- All pages of the Technical Bid submitted but not initialed by the authorized signatories on behalf of the Bidder.

- Technical Bid not including the covering letter as per Annexure 1.
- Technical Bid contains material inconsistencies in the information and documents submitted by the Bidder, affecting the Qualification Requirements.
- Information not submitted in formats specified in the RFP.
- The Bidder has not submitted a disclosure as per Annexure 13**.**
- Bidders delaying in submission of additional information or clarifications sought by the BPC.

3.8.2. Technical Bid found to be Non-responsive as per Clause **3.2,** due to any of the following conditions, shall be rejected.

- Technical Bid not received by the scheduled date and time.
- Technical Bid submitted by a Bidding Consortium not including the Consortium Agreement.
- Bidder submitting or participating in more than one response either as a Bidding Company or as a Member of Bidding Consortium.
- More than one Member of the Bidding Consortium or a Bidding Company using the credentials of the same Parent/Affiliate.
- Technical Bid having Conflict of Interest.
- If the Bidder makes any misrepresentation as specified in Clause **3.7.**

3.9. BPC reserves the right to interpret the Bid in accordance with the provisions of this RFP document and make its own judgment regarding the interpretation of the same. In this regard, BPC shall have no liability towards any Bidder and no Bidder shall have any recourse to BPC with respect to the qualification process.

BPC shall evaluate Bid using the process specified in Clause 3.1 to 3.6, at its sole discretion. BPC's decision in this regard shall be final and binding.

SECTION - 4

ANNEXURES FOR BID

SECTION – 4

I. Formats for Bid

The following formats are required to be included in the Bidder's Technical and Financial Bid. These formats are designed to demonstrate the Bidder's compliance with the Qualification Requirements set forth in Clause 2.1 of Section – 2.

Technical Bid

1. Format for the Covering Letter
2. Format for Letter of Consent from Consortium Members
3. Format for evidence of authorized signatory's authority (Power of Attorney)
4. Format for Power of Attorney from to be provided by each of the other Members of the Consortium in favor of the Lead Member
5. Format for Bidder's composition and ownership structure and Format for Authorization
6. Format for Consortium Agreement
7. Formats for Qualification Requirement
8. Format of Bidders Undertaking and details of Equity Investment
9. Authorization from Parent/Affiliate of Bidding Company/Member of Bidding Consortium whose technical/financial capability has been used by the Bidding Company/Member of Bidding Consortium.
10. Undertaking from the Technically / Financially Evaluated Entity(ies) or from Ultimate Parent Company for equity investment
11. Format of Board Resolutions
12. Format for Illustration of Affiliates
13. Format for Disclosure
14. Format for Bid Bond

14A. Format of the Surety Bond for Bid Security

14B Format of Payment on Order Instrument to be issued by IREDA/REC/PFC

15. Format for Contract Performance Guarantee

15A. Format for Surety Insurance Contract

15B. Format for issuance of Payment on Order Instrument

16. Checklist for Technical Bid submission requirements

22. Format for Affidavit

In addition to the online submission, the Bidder with lowest Final Offer will be required to submit original hard copies of Annexure 3, Annexure 4 (if applicable), Annexure 6 (if applicable) and Annexure 14/14A/14B before issuance of LoI.

Financial Bid

21. Format for Financial Bid

II. The following formats are for the information to the Bidders to enable them to submit their Bid.

11A. Illustration For Applicable Board Resolution Requirements Under Clause 2.5.2

17. List of Banks
18. GRID Map of the Project
19. Format for clarification/amendments on the RFP/RFP Project Documents
20. Formats for RFP Project Documents

Bidder may use additional sheets to submit the information for its detailed Bid.

ANNEXURE 1 - COVERING LETTER

(The covering letter should be on the Letter Head of the Bidding Company/ Lead Member of the Consortium)

Date: ……
From: ……
……
……
Tel. No.: ….....
Fax No.: .....
E-mail address: .....

To,

Chief Executive Officer,
REC Power Development and Consultancy Limited
(A wholly owned subsidiary of REC Limited)
REC Corporate Head Quarter,
D Block, Plot No. I – 4,
Sec – 29 Gurugram – 122 001

Dear Sir,

Sub: **Bid for selection of Bidder as Transmission Service Provider to establish Inter-State Transmission Scheme i.e., "Common Transmission System for evacuation of power from Lakadia (Phase-II: 7.5GW), Jam Khambhaliya (Phase-II: 5.5GW) and Jamnagar (Phase-I: 1GW) - Part-B" through tariff based competitive bidding process.**

1. Being duly authorized to present and act on behalf of M/s ..... (insert name of Bidding Company / Bidding Consortium) (hereinafter called the "Bidder") and having read and examined in detail the Request for Proposal (RFP) document, the undersigned hereby submit our Technical Bid with duly signed formats and Financial Bid (Initial Offer) as stipulated in RFP document for your consideration.

2. It is confirmed that our Bid is consistent with all the requirements of submission as stated in the RFP document and subsequent clarifications/amendments as per Clause 2.3 and 2.4 of RFP.

3. The information submitted in our Bid is complete, is strictly as per the requirements stipulated in the RFP document and is correct to the best of our knowledge and understanding. We would be solely responsible for any errors or omissions in our Bid.

4. We hereby agree and undertake to procure the products associated with the Transmission System as per provisions of Public Procurement (Preference to Make in India) orders issued by Ministry of Power vide orders No. 11/5/2018 - Coord. dated 28.07.2020 for transmission sector, as amended vide order No. A-1/2021-FSC- Part(5) dated 16.11.2021 and No.: P45021/2/2017-PP (BE-II)-Part-4 Vol.II dated 19.07.2024 issued by Ministry of Power for transmission sector, as may be further amended from time to time read with Department for Promotion of Industry and Internal Trade (DPIIT) orders in this regard.

We hereby also agree and undertake to comply with Department of Expenditure, Ministry of Finance revised OM dated 23.02.2023 issued in suppression of Order (Public Procurement No 1) bearing File No. 6/18/2019-PPD dated 23.07.2020, Order (Public Procurement No 2) bearing File No. 6/18/2019-PPD dated 23.07.2020 and Order (Public Procurement No. 3) bearing File No. 6/18/2019-PPD, dated 24.07.2020, Office Memorandum (OM) No. F.18/37/2020-PPD dated 08.02.2021, OM No. F.12/1/2021-PPD(Pt.) dated 02.03.2021, OM No. F.7/10/2021-PPD dated 08.06.2021 and Order (Public Procurement No 4) bearing File No. F.7/10/2021-PPD dated 23.02.2023 as amended from time to time, regarding public procurement from a bidder of a country, which shares land border with India.

5. We hereby agree to comply with Ministry of Power order no. 25-11/6/2018 – PG dated 02.07.2020 as amended from time to time.

6. We are herewith submitting legally binding board resolution for the total equity requirement of the Project.

7. We hereby confirm that in accordance with Clause 2.1.4 of the RFP, we are herewith submitting legally binding undertaking supported by a board resolution from the ….....(Insert name of Technically Evaluated Entity and/or Financially Evaluated Entity or its Ultimate Parent Company, as the case may be) that all the equity investment obligations of …….. (Insert name of the Bidding Company) shall be deemed to be equity investment obligations of the …… (Insert name of Technically Evaluated Entity and/or Financially Evaluated Entity or its Ultimate Parent Company, as the case may be) and in the event of any default by.....(Insert name of the Bidding Company), the same shall be met by..... (Insert name of Technically Evaluated Entity and/or Financially Evaluated Entity or its Ultimate Parent Company, as the case may be).

[Sl. No 7 to be inserted only in case the Bidder is a Bidding Company / Lead Member of a Consortium and has sought qualification on the basis of technical and financial capability of its Affiliate(s) and/or its Parent]

8. We confirm that there are no litigations or disputes against us, which materially affect our ability to fulfill our obligations with regard to the Project.

9. We hereby confirm that we shall continue to maintain compliance with Qualification Requirements till the execution of the Transmission Service Agreement. Further, in case we emerge as Selected Bidder for the Project, we shall continue to maintain compliance with Qualification Requirements till the COD of the Project.

10. We confirm that we have studied the provisions of relevant Indian laws and regulations required to enable us to build, own, operate and transfer the said Project and to prepare this Bid.

11. We hereby confirm that we shall abide unreservedly with BPC's decision in the qualification process for selection of Qualified Bidder and further warrant that under no circumstances we shall challenge either the BPC's decision or its right to make such decision at any time in the future.

12. We confirm that the Bid shall remain valid for a period of one eighty (180) days from the Bid Deadline.

13. The details of contact person are furnished as under:
Name: ……
Designation: ……
Name of the Company: ……
Address of the Bidder: ……
Phone Nos.: …….
Fax Nos.: …….
E-mail address: …….

14. Bid Bond

We have enclosed a Bid Bond of Rupees ……. Crores (Rs .....) only or US$ ..... (…….US Dollars), in the form of bank guarantee no……[Insert number of the Bank Guarantee] dated..... [Insert Date of the Bank Guarantee] as per your proforma (Annexure-14) from ..... [Insert name of bank providing Bid Bond] and valid up to …….in terms of Clause 2.11 of the RFP

Or

in the form of insurance surety bond no …….. [Insert number of the Insurance Surety Bond] dated..... [Insert Date of the Insurance Surety Bond] as per your proforma (Annexure- 14A) from .....[Insert name of Insurance Company providing Insurance Surety bond] and valid up to .....in terms of Clause 2.11 of the RFP or in the form of Payment on Order Instrument no .....[Insert number of the Instrument] dated.....[Insert Date of the Instrument] as per your proforma (Annexure-14B) from ..... [Insert name of company issuing Payment on Order Instrument] and valid up to ..... in terms of Clause 2.11 of the RFP.

15. Acceptance

We hereby unconditionally and irrevocably agree and accept that the decision made by the BPC on any matter regarding or arising out of the RFP shall be binding on us. We hereby expressly waive any and all claims in respect of Bid process.

16. Familiarity With Relevant Indian Laws & Regulations

We confirm that we have studied the provisions of relevant Indian laws and regulations as required to enable us to submit this Bid and execute the RFP Project Documents (other than TSA), in the event of our selection as the TSP. We further undertake and agree that all such factors as mentioned in Clause 2.5.7 of RFP have been fully examined and considered while submitting the Bid.

It is confirmed that our Bid is consistent with all the requirements of submission as stated in the RFP and subsequent communications from BPC.

The information submitted in our Bid is complete, strictly as per the requirements stipulated in the RFP and is correct to the best of our knowledge and understanding. We would be solely responsible for any errors or omissions in our Bid.

We confirm that we have not taken any deviation so as to be deemed non-responsive with respect to the provisions stipulated at Clause 2.5.1, of this RFP.

Thanking you,

Yours sincerely,

…….
(Name and Signature of the authorized signatory in whose name Power of Attorney/ Board Resolution as per Clause 2.5.2 is issued)

Name: ……
Designation: ……
Address: ……

Date: …….
Place: ……

Company Rubber Stamp

ANNEXURE 2 - LETTER OF CONSENT FROM CONSORTIUM MEMBERS

(On the letter head of each Member of the Consortium including Lead Member)

Date: ……
From: ……
……
……
Tel. No.: …… Fax No.: …… E-mail address: ……..

To,

Chief Executive Officer,
REC Power Development and Consultancy Limited
(A wholly owned subsidiary of REC Limited)
REC Corporate Head Quarter,
D Block, Plot No. I – 4,
Sec – 29 Gurugram – 122 001

Dear Sir,

Sub: **Bid for selection of Bidder as Transmission Service Provider to establish Inter-State Transmission System i.e., "Common Transmission System for evacuation of power from Lakadia (Phase-II: 7.5GW), Jam Khambhaliya (Phase-II: 5.5GW) and Jamnagar (Phase-I: 1GW) - Part-B" through tariff based competitive bidding process.**

We, the undersigned Member of …… (Insert name of the Bidding Consortium) have read, examined and understood the RFP document for the short-listing of Bidders as prospective TSP to establish Inter-State Transmission System i.e., "***Common Transmission System for evacuation of power from Lakadia (Phase-II: 7.5GW), Jam Khambhaliya (Phase-II: 5.5GW) and Jamnagar (Phase-I: 1GW) - Part-B"*** through tariff based competitive bidding process. We hereby confirm our concurrence with the Bid including in particular the Consortium Agreement submitted by ……. (Insert name of the Lead Member) in response to the RFP document.

We hereby confirm our commitment to participate in the said Bidding Consortium and invest ……. % of the total equity requirement for the Project as per the terms of the Consortium Agreement dated …… and board resolution for such investment commitment is enclosed herewith.

We hereby confirm that in accordance with Clause 2.1.4 of the RFP, we are enclosing legally binding undertaking supported by a board resolution from the .....(Insert name of Technically Evaluated Entity and / or Financially Evaluated Entity or its Ultimate Parent Company, as the case may be) that all the equity investment obligations of ……. (Insert name of the Member) shall be deemed to be equity investment obligations of the …… (Insert name of Technically Evaluated Entity and / or Financially Evaluated Entity or its Ultimate Parent Company, as the case may be) and in the event of any default by……. (Insert name of the Member), the same shall be met by.....(Insert name of Technically Evaluated Entity and / or Financially Evaluated Entity or its Ultimate Parent Company, as the case may be). [Insert if applicable]

[To be inserted by the Lead Member only] We are also enclosing legally binding board resolution for the total equity requirement of the Project in case of any breach of any of the equity investment commitment by any of the Consortium Members, in line with the provisions of the Consortium Agreement dated ..... [Bidder to insert date of Consortium Agreement].

The details of contact person are furnished as under:

Name: …….
Designation: …….
Name of the Company: …….
Address: …….
Phone Nos.: …….
Fax Nos.: …….
E-mail address: …….

Dated the ……. day of..... of 20…

Thanking you,

Yours faithfully,

……
(Signature)

Name: …….
Designation: …….

(Signature, Name, Designation of Authorized Signatory of Consortium Member and Company's Seal)

ANNEXURE 3 - FORMAT FOR EVIDENCE OF AUTHORIZED SIGNATORY'S AUTHORITY (POWER OF ATTORNEY)

POWER OF ATTORNEY

(To be on non-judicial stamp paper of appropriate value as per Stamp Act relevant to place of execution. Foreign companies submitting bids are required to follow the applicable law in their country)

Know all men by these presents, We …….(name and address of the registered office of the Bidder) do hereby constitute, appoint and authorize Mr./Ms……(name and residential address) who is presently employed with us and holding the position of ……. as our attorney, to do in our name and on our behalf, all such acts, deeds and things necessary in connection with or incidental to our Bid for selection of Bidder as Transmission Service Provider to establish Inter-State Transmission System i.e., ***"Common Transmission System for evacuation of power from Lakadia (Phase-II: 7.5GW), Jam Khambhaliya (Phase-II: 5.5GW) and Jamnagar (Phase-I: 1GW) - Part-B"*** through tariff based competitive bidding process in the country of India, including signing and submission of all documents related to the Bid, including, undertakings, letters, certificates, acceptances, clarifications, guarantees, etc., making representations to the BPC, and providing information / responses to the BPC, representing us in all matters before the BPC, and generally dealing with the BPC in all matters in connection with our Bid for the said Project till the completion of the bidding process in accordance with the RFP and signing of the Share Purchase Agreement by all the parties thereto.

We hereby agree to ratify all acts, deeds and things lawfully done by our said attorney pursuant to this Power of Attorney and that all acts, deeds and things done by our aforesaid attorney shall and shall always be deemed to have been done by us.

All the terms used herein but not defined shall have the meaning ascribed to such terms under the RFP.

For.....**[Insert name of the Bidder on whose behalf PoA is executed]**

……..
(Signature)

Name: …….
Designation: …….

Accepted

……..……
(Signature of the Attorney)

Name: …….
Designation: ...……..
Address: .....
.....
(Name, Designation and Address of the Attorney)

Specimen signatures of attorney attested by the Executant

……
(Signature of the Executant)

……..
(Signature of Notary Public)

Place: ……
Date: ……

Notes:

1) To be executed by Bidding Company or the Lead Member, in the case of a Bidding Consortium, as the case maybe.

2) The mode of execution of the Power of Attorney should be in accordance with the procedure, if any, laid down by the applicable law and the charter documents of the executant(s) and when it is so required, the same should be under common seal of the executant affixed in accordance with the applicable procedure. Further, the person whose signatures are to be provided on the power of attorney shall be duly authorized by the executant(s) in this regard.

3) Also, wherever required, the executant(s) should submit for verification the extract of the charter documents and documents such as a Board resolution / power of attorney, in favour of the Person executing this power of attorney for delegation of power hereunder on behalf of the executant(s).

4) In case of foreign Bidders, refer to clause 2.5.6 (p)

ANNEXURE 4 - FORMAT FOR POWER OF ATTORNEY TO BE PROVIDED BY EACH OF THE OTHER MEMBERS OF THE CONSORTIUM IN FAVOUR OF THE LEAD MEMBER

POWER OF ATTORNEY

(To be on non-judicial stamp paper of appropriate value as per Stamp Act relevant to place of execution. Foreign companies submitting bids are required to follow the applicable law in their country)

KNOW ALL MEN BY THESE PRESENTS THAT M/s....., having its registered office at ……..……., …..,..…and M/s …….…. having its registered office at ..... , (Insert names and registered offices of all Members of the Consortium), the Members of Consortium, have formed a Bidding Consortium named ……. (insert name of the Consortium) (hereinafter called the **"Consortium"**) vide Consortium Agreement dated…….…….. and having agreed to appoint M/s.....as the Lead Member of the said Consortium do hereby constitute, nominate and appoint M/s…….……..a company incorporated under the laws of..... and having its Registered / Head Office at ……..…….as our duly constituted lawful Attorney (hereinafter called as **"Lead Member"**) which is one of the Members of the Consortium, to act as the Lead Member and our true and lawful attorney, to do in our name and on our behalf, all such acts, deeds and things necessary in connection with or incidental to submission of Consortium's Bid for the Project, including signing and submission of the Bid and all documents related to the Bid, including, undertakings, letters, certificates, acceptances, clarifications, guarantees, etc, making representations to the BPC, and providing information / responses to the BPC, representing us and the Consortium in all matters before the BPC, and generally dealing with the BPC in all matters in connection with our Bid for the said Project, till completion of the bidding process in accordance with the RFP and signing of the Share Purchase Agreement by all the parties thereto.

It is expressly understood that in the event of the Consortium being selected as Successful Bidder, this Power of Attorney shall remain valid, binding and irrevocable until the Bidding Consortium achieves execution of all RFP Project Documents.

We, as the Member of the Consortium, agree and undertake to ratify and confirm all whatsoever the said Attorney/Lead Member has done on behalf of the Consortium Members pursuant to this Power of Attorney and the same shall bind us and deemed to have been done by us.

All the terms used herein but not defined shall have the meaning ascribed to such terms under the RFP.

IN WITNESS WHEREOF M/s....., as the Member of the Consortium have executed these presents on this…….. day of .....

For and on behalf of
Consortium Member

…….
(Signature of the Authorized Signatory)

Name: ……
Designation: ..……....
Place: ……
Date: ……..

Name: ……
Designation: ..……....
Place: ……
Date: ……..

Accepted
Specimen signatures of attorney attested

……
(Signature)

……

……

(Signature of Notary Public)
……

(Name, Designation and Address of the Attorney)

Place: ……
Date: ……..

Notes:

1. The mode of execution of the power of attorney should be in accordance with the procedure, if any, laid down by the applicable law and the charter documents of the executant(s) and when it is so required, the same should be under common seal of the executant affixed in accordance with the applicable procedure. Further, the person whose signatures are to be provided on the power of attorney shall be duly authorized by the executant(s) in this regard.

2. Also, wherever required, the executant(s) should submit for verification the extract of the charter documents and documents such as a Board resolution / power of attorney, in favour of the Person executing this power of attorney for delegation of power hereunder on behalf of the executant(s).

3. In case of foreign Bidders, refer to clause 2.5.6 (p)

ANNEXURE 5 - FORMAT FOR BIDDER'S COMPOSITION AND OWNERSHIP STRUCTURE

1. Corporate Details:

Please provide the following information for the Bidder. If the Bidder is a Consortium, please provide this information for each Member including the Lead Member:

a. Company's Name, Address, and Nationality:

Name: ……

Address: ……
……
……

Website Address: ……..

Country of Origin: ……

b. Year Organized: ……..

c. Company's Business Activities: …….
.....

d. Status as a Bidder:

i. Bidding Company
ii. Lead Member of the Bidding Consortium
iii. Member of the Bidding Consortium

Note: tick the applicable serial number

e. Company's Local Address in India (if applicable):

…….
…….
…….

f. Name of the Authorized Signatory: .....

g. Telephone Number: …….

h. Email Address: …….

i. Telefax Number: …….

j. Please provide the following documents:

i. Copy of the Memorandum and Articles of Association and certificate of incorporation or other equivalent organizational document (as applicable), including their amendments, certified by the Company Secretary as

Attachment 1 for Bidding Company / each Member of Bidding Consortium including Lead Member.

ii. Authority letter (as per format for authorization given below) in favour of BPC from the Bidder/every Member of the Consortium authorizing BPC to seek reference from their respective bankers & others as **Attachment 2** as per Clause 2.1.6 of the RFP.

2. Details of Ownership Structure:

Equity holding of Bidding Company/ each Member of Bidding Consortium including Lead Member owning 10% or more of total paid up equity.

Name of the Bidding Company / Consortium Member: …….

Status of equity holding as on ……

Name of the Equity Holder	Type and No. of Shares owned	Extent of Voting Control (%)
1.		
2.		
3.		
4.		
5.		
6.		
7.		
8.		
....		

Notes:

1. The above table is to be filled in separately for each Consortium Member.
2. Status of equity holding should be provided not earlier than thirty (30) days prior to Bid Deadline.

For and on behalf of Bidding Company / Lead Member of the Bidding Consortium
M/s…….

……..
(Signature of authorized representative)
Name: ……..
Designation: ……

……..
(Stamp)

Date: ……
Place: ……

FORMAT FOR AUTHORISATION

(In case of Bidding Consortium, to be given separately by each Member)
(On Non – judicial stamp paper duly attested by notary public. Foreign companies submitting bids are required to follow the applicable law in their country)

The undersigned hereby authorize(s) and request(s) all our Bankers, including its subsidiaries and branches, any person, firm, corporation or authority to furnish pertinent information deemed necessary and requested by REC Power Development and Consultancy Limited to verify our Bid for selection of Bidder as Transmission Service Provider to establish Inter-State Transmission system i.e., "**Common Transmission System for evacuation of power from Lakadia (Phase-II: 7.5GW), Jam Khambhaliya (Phase-II: 5.5GW) and Jamnagar (Phase-I: 1GW) - Part-B"** through tariff based competitive bidding process or regarding our project development experience, financial standing and general reputation.

For and on behalf of M/s..... **(Insert Name of Bidding Company or Member of the Consortium)**

.....
(Signature)

Name of Authorized Signatory: …….

(Signature and Name of the authorized signatory of the Company)

Place: ……
Date: ……

……..
(Company rubber stamp/seal)

…….
(Signature of Notary Public)

Place: ……
Date: ……

ANNEXURE 6 - FORMAT FOR CONSORTIUM AGREEMENT

(To be on non-judicial stamp paper of appropriate value as per Stamp Act relevant to place of execution. Foreign companies submitting bids are required to follow the applicable law in their country)

THIS CONSORTIUM AGREEMENT executed on this..... day of.....Two thousand.....between M/s....., a company incorporated under the laws of ..... and having its Registered Office at ..... (hereinafter called the "Party 1", which expression shall include its successors, executors and permitted assigns) and M/s.....a Company incorporated under the laws of ..... and having its Registered Office at.....(hereinafter called the "Party n", which expression shall include its successors, executors and permitted assigns) and for the purpose of submitting the Bid, acquisition of..... (Insert the name of SPV) (in case of award) and entering into other Agreement(s) as specified in the RFP (hereinafter referred to as "Agreements") as may be entered into with the Nodal Agency.

WHEREAS, the BPC had invited Bid in response to RFP issued to …… (insert the name of purchaser of RFP) for selection of the bidder as the Transmission Service Provider to establish Inter-State Transmission System i.e., **"Common Transmission System for evacuation of power from Lakadia (Phase-II: 7.5GW), Jam Khambhaliya (Phase-II: 5.5GW) and Jamnagar (Phase-I: 1GW) - Part-B".**

AND WHEREAS, Clause 2.2.4 of the RFP document stipulates that the Bidders qualifying on the strength of a Bidding Consortium will have to submit a legally enforceable Consortium Agreement in a format specified in the RFP document wherein the Consortium Members have to commit equity of a specific percentage in the Project.

AND WHEREAS, Clause 2.2.4 of the RFP document also stipulates that the Bidding Consortium shall provide along with the Bid, a Consortium Agreement as per prescribed format whereby the Consortium Members undertake to be liable for raising the required funds for its respective equity investment commitment as specified in Consortium Agreement.

NOW THEREFORE, THIS INDENTURE WITNESSTH AS UNDER:

In consideration of the above premises and agreement all the parties in this Consortium do hereby mutually agree as follows:

1. In consideration of the selection of the Consortium as the selected bidder by the BPC, we the Members of the Consortium and parties to the Consortium Agreement do hereby unequivocally agree that M/s ..... (Insert name of the Lead Member), shall act as the Lead Member as defined in the RFP for self and agent for and on behalf of ……., ..., ..., ...(the names of all the other Members of the Consortium to be filled in here).

2. The Lead Member is hereby authorized by the Members of Consortium and parties to the Consortium Agreement to bind the Consortium and receive instructions for and on behalf of the Members.

3. Notwithstanding anything contrary contained in this Consortium Agreement, the Lead Member shall always be liable for the equity investment obligations of all the Consortium Members, i.e., for both its own equity contribution as well as the equity contribution of other Members.

4. The Lead Member shall be liable and responsible for ensuring the individual and collective commitment of each of the Members of the Consortium in discharging all their respective equity obligations. Each Consortium Member further undertakes to be individually liable for the performance of its part of the obligations without in any way limiting the scope of collective liability envisaged in this agreement.

5. Subject to the terms of this agreement, the share of each Member of the Consortium in the "issued equity share capital of the project company" shall be in the following proportion: (if applicable)

Name	**Percentage of equity holding in the Project**
Party 1	……..
……..	……..
Party n	……..
Total	**100%**

[**Note:** The percentage equity holding for any Consortium Member in the Project cannot be zero in the above table]

6. The Lead Member shall inter alia undertake full responsibility for liaising with lenders and mobilizing debt resources for the Project and achieving financial closure.

7. In case of any breach of any of the equity investment commitment by any of the Consortium Members, the Lead Member shall be liable for the consequences thereof.

8. Except as specified in the Agreement, it is agreed that sharing of responsibilities as aforesaid and equity investment obligations thereto shall not in any way be a limitation of responsibility of the Lead Member under these presents.

9. It is further specifically agreed that the financial liability for equity contribution of Lead Member shall, not be limited in any way so as to restrict or limit its liabilities. The Lead Member shall be liable irrespective of their scope of work or financial commitments.

10. It is expressly understood and agreed between the Members that the responsibilities and obligations of each of the Members shall be as delineated as annexed hereto as **Appendix- I,** forming integral part of this Agreement. It is further agreed by the Members that the above sharing of responsibilities and obligations shall not in any way be a limitation of joint and several responsibilities and liabilities of the Members, with regards to all matters relating to the Project.

11. It is clearly agreed that the Lead Member shall ensure performance under the Agreements and if one or more Consortium Members fail to perform its /their respective obligations under the Agreement(s), the same shall be deemed to be a default by all the Consortium Members.

12. This Consortium Agreement shall be construed and interpreted in accordance with the Laws of India and courts at **Delhi** alone shall have the exclusive jurisdiction in all matters relating thereto and arising there under.

13. It is hereby agreed that, the Lead Member shall furnish the bid bond, as stipulated in the RFP, on behalf of the Consortium Members.

14. It is hereby agreed that in case of selection of Bidding Consortium as the selected bidder, the parties to this Consortium Agreement do hereby agree that they shall furnish the contract performance guarantee on behalf of the TSP in favor of the Nodal Agency, as stipulated in the RFP and Transmission Service Agreement.

15. It is further expressly agreed that the Consortium Agreement shall be irrevocable and shall form an integral part of the RFP Project Document and shall remain valid till the execution of the Share Purchase Agreement, unless expressly agreed to the contrary by the Nodal Agency. Over the term of the Transmission Service Agreement, Central Electricity Regulatory Commission (Sharing of Inter-State Transmission Charges and Losses) Regulations as amended from time to time shall apply on the Consortium Members.

16. The Lead Member is authorized and shall be fully responsible for the accuracy and veracity of the representations and information submitted by the Consortium Members respectively from time to time in response to the RFP and for the purposes of the Project.

17. It is hereby expressly agreed between the parties to this Consortium Agreement that neither party shall assign or delegate its rights, duties or obligations under this Agreement except with the prior written consent of the Nodal Agency.

THIS CONSORTIUM AGREEMENT:

a. has been duly executed and delivered on behalf of each party hereto and constitutes the legal, valid, binding and enforceable obligation of each such party,

b. sets forth the entire understanding of the parties hereto with respect to the subject matter hereof;

c. may not be amended or modified except in writing signed by each of the parties and with prior written consent of the Nodal Agency.

IN WITNESS WHEREOF, the parties to the Consortium Agreement have, through their authorized representatives, executed these present on the Day, Month and Year first mentioned above.

For and on behalf of Consortium Member 1 (Party 1)
M/s…….

.....
(Signature of authorized signatory)

Name: …….
Designation: .....……
Place: ……..
Date: ……

For and on behalf of Consortium Member n (Party n)
M/s…….

.....
(Signature of authorized signatory)

Name: ……
Designation: .....……...
Place: …….
Date: ……...

Attested:
……..
(Signature)
(Notary Public)

Place: …….
Date: …….

Note: In case of foreign Bidders, refer to clause 2.5.6 (p)

Appendix 1 to the Consortium Agreement:

Name of the Consortium Member	Responsibilities under the Consortium Agreement
M/s …… (Party 1)	
M/s ……	
M/s …… (Party n)	

ANNEXURE 7A - FORMAT FOR QUALIFICATION REQUIREMENT

A. NET WORTH

To,
Chief Executive Officer,
REC Power Development and Consultancy Limited
(A wholly owned subsidiary of REC Limited)
REC Corporate Head Quarter,
D Block, Plot No. I – 4,
Sec – 29 Gurugram – 122 001

Dear Sir,

Sub: Bid for selection of Bidder as Transmission Service Provider to establish Inter-State Transmission System i.e., "Common Transmission System for evacuation of power from Lakadia (Phase-II: 7.5GW), Jam Khambhaliya (Phase-II: 5.5GW) and Jamnagar (Phase-I: 1GW) - Part-B" through tariff based competitive bidding process

1. [Note: Applicable in case of Bidding Company]

We certify that the Financially Evaluated Entity(ies) had a Networth of Rs..... Crore or equivalent USD* computed as per instructions in this RFP based on unconsolidated audited annual accounts (refer Note-2 below) of any of the last three (3) financial years as provided in Clause 2.2.3, immediately preceding the Bid Deadline. Also, the Networth of any of the last three (3) financial years is not negative.

Name of Financially Evaluated Entity(ies)	Relationship with Bidding Company**	Financial Year	Networth (Rs. Crore)
1. ……..			
2. ……..			
3. ……..			
….			
Total Networth			

*Equivalent USD shall be calculated as per provisions of Clause 3.4.1.
** The column for "Relationship with Bidding Company" is to be filled in only in case financial capability of Parent/Affiliate has been used for meeting Qualification Requirements.

2. [Note: Applicable in case of Bidding Consortium]

We certify that the Financially Evaluated Entity(ies) had a minimum Networth of Rs. … Crore or equivalent USD* computed as per instructions in the RFP and based on unconsolidated audited annual accounts (refer Note-2 below) of any of the last three (3) financial years as provided in Clause 2.2.3, immediately preceding the Bid Deadline. Also, the Networth of any of the last three (3) financial years is not negative.

Name of Consortium Member	Equity Commitment in the Project (%)	Networth of Member (Rs. Crore)	Networth Requirement to be met by Member in proportion to the Equity Commitment (Rs. Crore)	Whether the Member meets the Networth Requirement
(1)	(2)	(3) (As per table below)	(4)= (2 x Total Networth requirement for the Project)	(5)
1. ……				Yes / No
2. ……				Yes / No
..				Yes / No
Total Networth for financial requirement				

Member – I (Lead Member)

[Note: Similar particulars for each Member of the Consortium is to be furnished, duly certified by the Member's Statutory Auditors]

i. Name of Member: .....

ii. Total Networth requirement: Rs .....Crore

iii. Percentage of equity commitment for the Project by the Member: .....%

iv. Networth requirement for the Member***: Rs..... Crore

v. Financial year considered for the Member: …….

Name of Financially Evaluated Entity(ies)	Relationship** with Member of Consortium	Financial Year	Networth (Rs. Crore)
1. …….			
2. …….			
3. …….			
Total Networth			

* Equivalent USD shall be calculated as per provisions of Clause 3.4.1;

** The column for "Relationship with Member of Consortium" is to be filled in only in case the financial capability of Parent / Affiliate has been used for meeting Qualification Requirements;

*** Networth requirement to be met by Member should be in proportion to the equity commitment of the Member for the Project.

Yours faithfully

……
(Signature and name of the authorized signatory of the Company and Stamp)

Name: …….
Date: …….
Place: …….

……
(Signature and Stamp of statutory Auditors of Bidding Company / each Member of Consortium)

Name: …….
Date: …….
Place: …….

Date: …….

Notes:

1. Along with the above format, in a separate sheet, please provide details of computation of Networth of last three (3) financial years duly certified by Statutory Auditor.

2. Audited consolidated annual accounts of the Bidder may be used for the purpose of financial criteria provided the Bidder has at least 26% equity in each company whose accounts are merged in the audited consolidated accounts and provided further that the financial capability of such companies (of which accounts are being merged in the consolidated accounts) shall not be considered again for the purpose of evaluation of the Bid.

3. In case Bidder or a Member of Consortium takes recourse to its Parent/Affiliate for meeting technical / financial requirements, then the financial years considered for such purpose should be same for the Bidder / Member of Consortium and their respective Parent / Affiliate.

ANNEXURE 7B - FORMAT FOR TECHNICAL REQUIREMENT

To,

Chief Executive Officer,
REC Power Development and Consultancy Limited
(A wholly owned subsidiary of REC Limited)
REC Corporate Head Quarter,
D Block, Plot No. I – 4,
Sec – 29 Gurugram – 122 001

Dear Sir,

Sub: Bid for selection of Bidder as Transmission Service Provider to establish Inter-State Transmission System i.e., "Common Transmission System for evacuation of power from Lakadia (Phase-II: 7.5GW), Jam Khambhaliya (Phase-II: 5.5GW) and Jamnagar (Phase-I: 1GW) - Part-B" through tariff based competitive bidding process

1. To be used by Bidder using the development experience in infrastructure sector

We certify that M/s .....(Insert name of Technically Evaluated Entity(ies)) have experience of development of projects in the Infrastructure sector in the last five (5) years whose aggregate capital expenditure is Rs ..... Crore or equivalent USD*. We further certify that the capital expenditure of any single project considered for meeting the technical Qualification Requirement is not less than Rs Crore or equivalent USD*.
For this purpose, capital expenditure incurred on projects which have been either wholly completed / commissioned or partly completed projects put under commercial operation and for which operation has commenced till at least seven (7) days prior to the Bid Deadline has been considered.

The project(s) considered for the purpose of technical experience (as per table given below) have been executed and owned to the extent as indicated in the table below (to be atleast twenty – six percent (26%)) by the Bidding Company / Lead Member of the Consortium / our Parent / our Affiliate(s) [strike off whichever is not applicable] on operation of the projects.

This technical requirement has been calculated as per the instructions provided in the RFP on the basis of following projects:

Name of Company (which has executed the project at (3)) whose technical capability has been used for Qualification Requirement	Relationship** with Bidding Company / Lead Member	Project name	Nature of Project (BOOT, BOT, BOOM, DBFOT etc.)	Relevant Infrastructure sector	Date of Financial Closure of the Project (in DD / MM / YYYY)	Date of Completion / Commissioning / Commercial Operation of partly completed projects	Project cost (Rs. Crore)	Percentage Equity Holding of Company at (1) in Completed project(s)
(1)	(2)	(3)	(4)	(5)	(6)	(7)	(8)	(9)
……		……. (Project 1)						
……		…….						
Total (Rs. Crore)								

* Equivalent USD shall be calculated as per provisions of Clause _____

** The column for "Relationship with Bidding Company / Lead Member" is to be filled in only in case technical capability of Parent/Affiliate has been used for meeting Qualification Requirements.

We further certify that the Company(ies) as indicated in column (1) of the above table, whose technical capability has / have been used for meeting the qualification requirement, has / have held shareholding respectively of atleast twenty – six percent (26%) from the date of financial closure till the date of commissioning / completion of the above project(s).

2. To be used by Bidder using construction experience in infrastructure sector.

We certify that M/s..... (Insert name of Technically Evaluated Entity(ies)) have received aggregate payments not less than Rs.....Crore or equivalent USD (calculated as per provisions in Clause 3.4.1) from its client(s) for construction works fully completed during the last 5(five) financial years. We further certify that the payment received from each project shall not be less than Rs. ……. Crore or equivalent USD (calculated as per provisions in Clause 3.4.1). For this purpose, payments received on projects that have been commissioned/completed at least seven (7) days prior to the Bid Deadline shall be considered. Further only the payments (gross) actually received, during such 5 (five) financial years shall qualify for purposes of computing the technical capacity.

We also confirm that construction works does not include cost of land supply of goods or equipment except when such goods or equipment form part of a turn-key construction contract/ EPC contract for the project.

This technical requirement has been calculated as per the instructions provided in the RFP on the basis of following projects:

Name of Company (which has executed the project at (3)) whose technical capability has been used for Qualification Requirement	Relationship** with Bidding Company / Lead Member	Project name	Nature of Project (EPC, Turnkey etc)	Relevant Infrastructure sector	Date of award of contract (in dd/mm/yy)	Date of Completion / Commissioning	Payment received (Rs. Crore)
(1)	(2)	(3)	(4)	(5)	(6)	(7)	(8)
……		……. Project 1					
……		…….					
……		…….					
	Total (Rs. Crore)						

Yours faithfully

……..
(Signature and name of the authorized signatory of the Company and stamp)

Name: ……..
Date: ……..
Place: ……..

…….
(Signature and Stamp of statutory Auditors of Bidding Company/ Lead Member of Consortium)
Name: ……..
Date: ……..
Place: ……..

Date: …….

Notes:

1. Along with the above format, in a separate sheet, please provide details of computation of capital expenditure of projects duly certified by Statutory Auditor of the project company. In addition, the Statutory Auditor of the project company should also certify that the capital expenditure of projects commissioned or completed 7 days prior to Bid Deadline has been capitalized in the books of accounts.

   Additionally, in case construction experience is used, a certificate(s) from the statutory auditors stating the payments received and the concerned client(s) stating the works commissioned during the past 5 years in respect of the projects specified above. In case a particular job/ contract has been jointly executed by the Bidder (as part of a consortium), it should further support its claim for the share in work done for that particular job/ contract by producing a certificate from its statutory auditor or the client.

2. In case the accounts for the financial year in which the project claimed for meeting qualification requirement has been commissioned are not audited, the Bidder shall give declaration in this regard duly certified by its statutory auditor. In such a case, Bidder shall provide details of computation of capital expenditure of such project(s) duly certified by Statutory Auditor of the project company and the Statutory Auditor of the project company should also certify that the capital expenditure of projects commissioned or completed shall be capitalized in the books of accounts upon finalization.

3. The unconsolidated audited annual accounts of both the TEE and the Bidding Company / Lead Member for the respective financial years (financial years in which financial closure was achieved to the financial year in which the said project was completed / commissioned) should be submitted.

ANNEXURE 7C - FORMAT FOR TECHNICAL & FINANCIAL REQUIREMENT – RELATIONSHIP & DETAILS OF EQUITY SHAREHOLDING

[To be filled by Bidding Company / each Member of the Bidding Consortium including Lead Member if credentials of Parent and / or Affiliates have been used by them]

To,

Chief Executive Officer,
REC Power Development and Consultancy Limited
(A wholly owned subsidiary of REC Limited)
REC Corporate Head Quarter,
D Block, Plot No. I – 4,
Sec – 29 Gurugram – 122 001

Dear Sir,

Sub: Bid for selection of Bidder as Transmission Service Provider to establish Inter-State Transmission System i.e., "Common Transmission System for evacuation of power from Lakadia (Phase-II: 7.5GW), Jam Khambhaliya (Phase-II: 5.5GW) and Jamnagar (Phase-I: 1GW) - Part-B" through tariff based competitive bidding process

We certify that M/s. ……. (insert name of the **Bidding Company / Consortium Members**) have considered the technical and financial capability of its Parent and / or Affiliates, for the purpose of meeting Qualification Requirements as per the instructions provided in the RFP. The name of Parent and / or Affiliate, nature of relationship(s) with such Parent and / or Affiliate and details of equity holding are as follows:

Name of Company whose credentials considered	Type of credentials considered (technical and / or financial)	Relationship with Bidding Company / Consortium Member (Parent / Affiliate)	Details of equity shareholding (refer notes below)
Company 1			
…….			
…….			
…….			
……..			

NOTES:

i. In case of Parent, the equity holding of the Parent in the Bidding Company / Member of the Bidding Consortium, including the Lead Member of the Consortium, need to be specified.

ii. In case of Affiliate under direct control of Bidder, the equity holding of the Bidding Company / Member of the Bidding Consortium, including the Lead Member of the Consortium in the Affiliate, needs to be specified.

iii. In case of Affiliate under common control of Parent, the equity holding of the Parent in the Affiliate of the Bidding Company / Member of the Bidding Consortium, including the Lead Member of the Consortium, needs to be specified.

iv. Relationship of Parent / Affiliate with Bidding Company / Member of Consortium to be at the most seven (7) days prior to the Bid Deadline (as per Clause 2.1.4 of RFP)

Yours faithfully

……
(Signature and name of the authorized signatory of the Company and stamp)

Name: ……
Date: ……
Place: ……

……
(Signature and Stamp of statutory Auditors of Bidding Company / each Member of Bidding Consortium)

Name: ……..
Date: ……..
Place: ……..

ANNEXURE 7D - ADDITIONAL INFORMATION FOR VERIFICATION OF FINANCIAL AND TECHNICAL CAPABILITIES OF BIDDERS.

……..…….
(Name of Bidder (Bidding Company/ Bidding Consortium or Technically/Financially Evaluated Entity(ies))

(Note: In case of Consortium, details to be filled in by Lead Member for each Member of the Consortium including the Lead Member and in case of the qualification requirements of Technically / Financially Evaluated Entity(ies) being used, to be filled by each of such entity(ies)

i. Financial capability (Attachment 1):

1. Bidders shall attach unconsolidated / consolidated audited annual accounts, statements, as the case may be, (refer Clause 2.1.3) for the last three (3) financial years as Attachment 1. Such unconsolidated audited annual accounts shall include a Balance Sheet, Profit and Loss Account, Auditors Report and profit appropriation account.

ii. Technical capability (Attachment 2):

a. This attachment shall include details of projects completed/commissioned or partly completed projects for which commercial operation has commenced to be considered for the purpose of meeting Qualification Requirements.

1. To be used by Bidder using development experience in infrastructure sector

Particulars	Year 1	Year 2	Year 3	Year 4	Year 5
Name(s) of project(s) from Infrastructure sectors					
Location(s) including country(s) where project was set up					
Nature of Project					
Voltage level (if any)					
Capital cost of project(s) Rs. in Crore					
*Status of the project					
% of equity owned in the project(s)					

***Note 1:** Date of completion/commissioning/commercial operation to be mentioned

Note 2: For each project listed in the table, the Bidder shall furnish an executive summary including the following information:

- Project model, i.e., BOO, BOOT, BOOM;

- Debt financing and equity raised and provided by Bidder/Bidder's Parent/Bidder's Affiliate for the project, including names of lenders and investors;
- Size and type of installation;
- Technical data/information on major equipment installed
- Description of role performed by the Bidder/Bidder's Parent/Bidder's Affiliate on the project
- Clearances taken by the Bidder/Bidder's Parent/Bidder's Affiliate including but limited to right-of-way (RoW), forest clearance and other statutory / Govt. clearances.
- Cost data (breakdown of major components)
- Name of EPC and/or other major contractor
- Construction time for the project
- Names, addresses and contact numbers of owners of the projects
- Operating reliability over the past five (5) years or since date of commercial operation
- Operating environmental compliance history
- Names of supervisory entities or consultant, if any
- Date of commercial operation
- Total duration of operation

2. To be used by Bidder using construction experience in infrastructure sector

Particulars	Year 1	Year 2	Year 3	Year 4	Year 5
Name(s) of project(s) from Infrastructure sectors					
Location(s) including country(s) where project was set up					
Nature of Project					
Voltage level (if any)					
Revenue received Rs. in Crore					
*Status of the project					
% of equity owned in the project(s)					

***Note 1:** Date of completion/commissioning/commercial operation to be mentioned

Note 2: For each project listed in the table, the Bidder shall furnish an executive summary including the following information:

- Project model, i.e., EPC, Turnkey;
- Size and type of installation;
- Technical data/information on major equipment installed
- Description of role performed by the Bidder/Bidder's Parent/Bidder's Affiliate on the project
- Cost data (breakdown of major components)
- Name of sub-contractor
- Construction time for the project
- Names, addresses and contact numbers of owners of the projects

- Operating reliability over the past five (5) years or since date of commercial operation
- Operating environmental compliance history
- Names of supervisory entities or consultant, if any
- Date of commercial operation
- Total duration of operation

iii. Attachment-3:

a. For each project listed in Attachment 2 above, certificates of final acceptance and/or certificates of good operating performance duly issued by owners for the project and the same shall be certified as true by authorized signatory of the Bidding Company or the Lead Member of Consortium). In case the project listed in Attachment 2 is under BOOT / DBFOT mechanism, the certificates of final acceptance and/or certificates of good operating performance must be issued by the authority / independent engineer of the project as defined in the respective project agreement.

For and on behalf of Bidding Company/Consortium

M/s…….

…….
(Signature of authorized signatory)

Name: ……
Designation: ……
Date: ……
Place: ……

ANNEXURE 8 -UNDERTAKING AND DETAILS OF EQUITY INVESTMENT

Format 1: Bidders' Undertakings

[On the Letter Head of the Bidding Company/Lead Member of Bidding Consortium]

Date: .....

To,

Chief Executive Officer,
REC Power Development and Consultancy Limited
(A wholly owned subsidiary of REC Limited)
REC Corporate Head Quarter,
D Block, Plot No. I – 4,
Sec – 29 Gurugram – 122 001

Dear Sir,

Sub: Bidders' Undertakings in respect of Bid for selection of Bidder as TSP to establish Inter-State transmission system i.e., "Common Transmission System for evacuation of power from Lakadia (Phase-II: 7.5GW), Jam Khambhaliya (Phase-II: 5.5GW) and Jamnagar (Phase-I: 1GW) - Part-B"

We hereby undertake on our own behalf and on behalf of the TSP, that if selected as the Successful Bidder for the Project:

1. The Project shall comply with all the relevant electricity laws, codes, regulations, standards and Prudent Utility Practices, environment laws and relevant technical, operational and safety standards, and we shall execute any agreements that may be required to be executed as per law in this regard.

2. We confirm that the Project shall also comply with the standards and codes as per Clause 1.6.1.2 of the RFP and the TSP shall comply with the provisions contained in the Central Electricity Regulatory Commission Grant of Connectivity, Long-term Access and Medium-term Open Access in inter-state Transmission and related matters Open Access) Regulations, 2009.

3. We give our unconditional acceptance to the RFP dated 04.05.2026 issued by the BPC and the RFP Project Documents, as amended, and undertake to ensure that the TSP shall execute all the RFP Project Documents, as per the provisions of this RFP.

4. We have submitted the Bid on the terms and conditions contained in the RFP and the RFP Project Documents. Further, the Financial Bid submitted by us is strictly as per the format provided in Annexure 21 of the RFP, without mentioning any deviations, conditions, assumptions or notes in the said Annexure.

5. Our Bid is valid up to the period required under Clause 2.8 of the RFP.

6. Our Bid has been duly signed by authorized signatory and stamped in the manner and to the extent indicated in this RFP and the power of attorney / Board resolution in requisite format

as per RFP has been enclosed with this undertaking.

7. We have assumed that if we are selected as the Successful Bidder, the provisions of the Consortium Agreement, to the extent and only in relation to equity lock in and our liability thereof shall get modified to give effect to the provisions of Clause 2.5.8 of this RFP and Article 18.1 of the Transmission Service Agreement. ***(Note:*** *This is applicable only in case of a Bidding Consortium)*

8. We confirm that our Bid meets the Scheduled COD of each transmission Element and the Project as specified below:

Sl. No.	Name of the Transmission Element	Scheduled COD	% of Quoted Transmission Charges recoverable on Scheduled COD of the Element of the Project	Element(s) which are pre- required for declaring the commercial operation (COD) of the respective Element
1.	Establishment of 765/400 kV, 3x1500 MVA & 400/220 kV, 3x500 MVA Nasik S/s (towards South of Nasik) with 2x330 MVAr 765 kV bus reactor and 2x125 MVAr 400 kV bus reactor	36 months	100	All the elements are required simultaneously to ensure their utilization
2.	South Olpad (GIS) – Nasik 765 kV D/C line.			
3.	2 Nos. 765 kV line bays at South Olpad (GIS) S/s (Sec-II) for South Olpad – Nasik 765 kV D/C line.			
4.	765 kV, 240 MVAr Switchable line reactors on each circuit at both ends of South Olpad – Nasik 765 kV D/C line.			
5.	Nasik – Pimpalgaon (MSETCL) 400 kV D/C line (Quad ACSR/AAAC/AL59 moose equivalent) (*Line to be routed from near Sinner TPP / Raymond i.e. from eastern side of Nasik*).			

Sl. No.	Name of the Transmission Element	Scheduled COD	% of Quoted Transmission Charges recoverable on Scheduled COD of the Element of the Project	Element(s) which are pre- required for declaring the commercial operation (COD) of the respective Element
6.	2 Nos. 400 kV line bays at Pimpalgaon S/s for Nasik – Pimpalgaon (MSETCL) 400 kV D/C line (Quad ACSR/AAAC/AL59 moose equivalent)			

Note: *Effective date as per TSA of present scheme shall be matched with the Effective date of "Common Transmission System for evacuation of power from Lakadia (Phase-II: 7.5 GW), Jam Khambhaliya (Phase-II: 5.5 GW) and Jamnagar (Phase-I: 1 GW)" Parts A & C. and "Transmission System for Integration of Power from RE Projects in Lakadia REZ in Gujarat-Phase II (7500 MW)".*

Scheduled COD for the Project: 36 months.

9. We confirm that our Financial Bid conforms to all the conditions mentioned in this RFP, and in particular, we confirm that:

   a. Financial Bid in the prescribed format of Annexure 21 has been submitted duly signed by the authorized signatory.

   b. Financial Bid is unconditional.

   c. Only one Financial Bid has been submitted.

10. We have neither made any statement nor provided any information in this Bid, which to the best of our knowledge is materially inaccurate or misleading. Further, all the confirmations, declarations and representations made in our Bid are true and accurate. In case this is found to be incorrect after our acquisition of..... (Insert the name of SPV), pursuant to our selection as Selected Bidder, we agree that the same would be treated as a TSP's Event of Default under Transmission Service Agreement, and relevant provisions of Transmission Service Agreement shall apply.

11. We confirm that there are no litigations or other disputes against us which materially affect our ability to fulfill our obligations with regard to the Project as per the terms of RFP Project Documents.

12. Power of attorney/ Board resolution as per Clause 2.5.2 is enclosed.

Signature and name of the authorized signatory of the Company and stamp of Bidding Company or Lead member of Consortium

Note:

1. In case of foreign Bidders, refer to clause 2.5.6 (p)

Format 2: Details of equity investment in Project

1.1.a Name of the Bidding Company/ Bidding Consortium:

1.1.b Name of the Lead Member in the case of a Bidding Consortium:

1.2 Investment details of the Bidding Company/Member of the Bidding Consortium investing in ..... (Insert the name of SPV) as per Clause 2.5.8.2.

S. No.	**Name of the Bidding Company/ Member in case of a Bidding Consortium**	**Name of the Company investing in the equity of the** …… (Insert the name of SPV)	**Relationship with Bidding Company /Member of the Bidding Consortium**	**% of equity participation in the** … .....(Insert the name of SPV)
(1)	(2)	(3)	(4)	(5)
TOTAL				100%

* In case the Bidder proposes to invest through its Affiliate(s) / Parent Company / Ultimate Parent Company, the Bidder shall declare shareholding pattern of such Affiliate(s) / Parent Company / Ultimate Parent Company and provide documentary evidence to demonstrate relationship between the Bidder and the Affiliate(s) / Parent Company / Ultimate Parent Company. These documentary evidences could be, but not limited to, demat account statement(s) / Registrar of Companies' (ROC) certification / share registry book, etc duly certified by Company Secretary.

Members of the Consortium or the Bidding Company making investment in the equity of the ….....(Insert the name of SPV) themselves to fill in their own names in the column (3)

Signature and Name of authorized signatory in whose name power of attorney has been issued

Signature of authorized signatory

Name: …….

Designation: ……...

Date…….

Company rubber stamp

ANNEXURE 9 -AUTHORISATION FROM PARENT / AFFILIATE OF BIDDING COMPANY / MEMBER OF BIDDING CONSORTIUM WHOSE TECHNICAL / FINANCIAL CAPABILITY HAS BEEN USED BY THE BIDDING COMPANY / MEMBER OF BIDDING CONSORTIUM.

[On the Letter Head of the Parent /Affiliate]

Name: …….
Full Address: …….
Telephone No.: ……...
E-mail address: ……...
Fax / No.: ……

To

Chief Executive Officer,
REC Power Development and Consultancy Limited
(A wholly owned subsidiary of REC Limited)
REC Corporate Head Quarter,
D Block, Plot No. I – 4,
Sec – 29 Gurugram – 122 001

Dear Sir,

Sub: Authorization for use of Technical / Financial Capability of M/s……. (Insert name of Parent / Affiliate) by M/s …….. (Insert name of Bidding Company / Member of Bidding Consortium).

We refer to the RFP dated 04.05.2026 ('RFP') issued by you for selection of Bidder as Transmission Service Provider for establishing the Inter-State Transmission System i.e., **"Common Transmission System for evacuation of power from Lakadia (Phase-II: 7.5GW), Jam Khambhaliya (Phase-II: 5.5GW) and Jamnagar (Phase-I: 1GW) - Part-B"**

We confirm that M/s .....(Insert name of Bidding Company/ Consortium Member) has been authorized by us to use our technical and/or financial capability [strikeout whichever is not applicable] for meeting the Qualification Requirements i.e., **"Common Transmission System for evacuation of power from Lakadia (Phase-II: 7.5GW), Jam Khambhaliya (Phase-II: 5.5GW) and Jamnagar (Phase-I: 1GW) - Part-B"**

We have carefully read and examined in detail the RFP including in particular, Clause 2.1.4 of the RFP, and we are also submitting legally binding undertaking supported by a board resolution that all the equity investment obligations of M/s……..…. (Insert Name of Bidding Company / Consortium Member), shall be deemed to be our equity investment obligations and in the event of any default the same shall be met by us. For and on behalf of M/s.....(Insert Name of Parent / Affiliate)

……
(Signature and Name of the authorized signatory of the Company and stamp)

Name: …….
Date: …….
Place: …….

Notes:

1. The above undertaking can be furnished by Ultimate Parent of Technically Evaluated Entity or Financially Evaluated Entity, as the case maybe, if legally binding undertaking is also furnished by the Ultimate Parent on behalf of such Financially Evaluated Entity/Technically Evaluated Entity.

ANNEXURE 10- FORMAT OF UNDERTAKING BY TECHNICALLY / FINANCIALLY EVALUATED ENTITY / ULTIMATE PARENT COMPANY

[On the Letter Head of the Technically / Financially Evaluated Entity / Ultimate Parent Company]

Name: …….

Full Address: ……

Telephone No.: ……

E-mail address: ……

Fax/No.: ……..

To:

Chief Executive Officer,
REC Power Development and Consultancy Limited
(A wholly owned subsidiary of REC Limited)
REC Corporate Head Quarter,
D Block, Plot No. I – 4,
Sec – 29 Gurugram – 122 001

Sub: Undertaking for equity investment

Dear Sir,

We refer to the Request for Proposal dated 04.05.2026 ('RFP') issued by you regarding setting up of Inter-State transmission system i.e., **"Common Transmission System for evacuation of power from Lakadia (Phase-II: 7.5GW), Jam Khambhaliya (Phase-II: 5.5GW) and Jamnagar (Phase-I: 1GW) - Part-B"** Project on build, own, operate and transfer basis.

We have carefully read and examined in detail the RFP and the RFP Project Documents, including in particular, Clause 2.1.4 of the RFP and Clauses 2.5.2 and 2.5.8 of the RFP, regarding submission of an undertaking regarding the investment in the equity share capital of.....(Insert the name of SPV) and provisions for minimum equity holding and equity lock-in. We have also noted the amount of the equity investment required to be made in.....(Insert the name of SPV) by the.....[Insert the name of the Bidder or the Consortium Member] for the Project.

In view of the above, we hereby undertake to you and confirm that in the event of failure of ….....[Insert the name of the Bidder or the Consortium Member] to invest in full or in part, in the equity share capital of.....(Insert the name of SPV) as specified in the Bid, we shall invest the said amount not invested by.....[Insert the name of the Bidder or the Consortium Member] in .....(Insert the name of SPV) by purchase of existing shares or subscribing to the new shares of .....(Insert the name of SPV), as stipulated by you.

We have attached hereto a certified true copy of the Board resolution whereby the Board of Directors of our Company has approved issue of this Undertaking by the Company.

All the terms used herein but not defined, shall have the meaning as ascribed to the said terms under the RFP.

Certified as true.

……..

(Signature and Name of the authorized signatory of the Company and stamp)

Note:

1. Wherever required, extract of the charter documents and documents such as a Board resolution should be submitted for verification.

ANNEXURE 11 - FORMATS FOR BOARD RESOLUTIONS

Format 1

Format of the Board resolution for the Bidding Company / each Member of the Consortium / investing Affiliate / Parent Company / Ultimate Parent Company, where applicable

[Reference Clause 2.5.2 of the RFP and the illustrations in Annexure 11A]

[Note: The following resolution no.1 needs to be passed by the Boards of each of the entity/(ies) making equity investment]

The Board, after discussion, at the duly convened Meeting on ..... [Insert date], with the consent of all the Directors present and in compliance of the provisions of the Companies Act, 1956/2013, passed the following Resolution:

1. RESOLVED THAT pursuant to the provisions of the Companies Act, 1956 / Companies Act 2013 (as the case may be) and compliance thereof and as permitted under the Memorandum and Articles of Association of the company, approval of the Board be and is hereby accorded for investment of…….% (……per cent) of the total equity share capital of.....(Insert the name of SPV) representing the entire amount proposed to be invested by the company for the transmission system i.e., **"Common Transmission System for evacuation of power from Lakadia (Phase-II: 7.5GW), Jam Khambhaliya (Phase-II: 5.5GW) and Jamnagar (Phase-I: 1GW) - Part-B"** , partly by acquisition of the existing equity shares from .....[Insert the name of the BPC] and / or partly by subscribing to the new equity shares, as per the terms of the RFP.

[Note: Equity investment obligations by the Bidding Company/each Member of the Bidding Consortium/investing Affiliate or Parent or Ultimate Parent should add up to 100%.]

[Note: In the event the Bidder is a Bidding Consortium, the following Board resolution no. 2 also needs to be passed by the Lead Member of the Bidding Consortium]

2. RESOLVED THAT approval of the Board be and is hereby accorded to contribute such further amount over and above the ……. percentage (_%) limit to the extent becoming necessary towards the total equity share in the .....(Insert the name of SPV), obligatory on the part of the company pursuant to the terms and conditions contained in the Consortium Agreement dated ..... executed by the company as per the provisions of the RFP.

[Note: In the event, the investing entity is an Affiliate or Parent or Ultimate Parent of the Bidder, the following Board resolution no. 3 shall also be passed by the Bidder]

3. FURTHER RESOLVED THAT the Board hereby acknowledges the Board Resolution(s) passed by the..... [Name of the Affiliate(s)/ Parent / Ultimate Parent] regarding the investment of…….(….%) of the equity share capital requirements of.....(Insert the name of SPV), which is to be invested by the …….[Name of the Affiliate(s)/ Parent / Ultimate Parent] for the.....(Insert the name of SPV), partly by acquisition of the existing equity shares from _____[Name of BPC] and partly by subscribing to the new equity shares, as per the terms of the RFP.

[Note: The following resolution no. 4 is to be provided by the Bidding Company / Lead Member of the Consortium only]

4. FURTHER RESOLVED THAT MR/MS ……..be and is hereby authorized to take all the steps required to be taken by the Company for submission of the Bid, including in particular, signing of the Bid, making changes thereto and submitting amended Bid, all the documents related to the Bid, certified copy of this Board resolution or letter or undertakings etc, required to be submitted to BPC as part of the Bid or such other documents as may be necessary in this regard.

Certified True Copy

Company rubber stamp to be affixed

[Notes:

1) This certified true copy should be submitted on the letterhead of the Company, signed by the Company Secretary or any Whole Time Director/ Manager (supported by a specific board resolution) of the Bidding Company or the Lead Member of Consortium.

2) The contents of the format may be suitably re-worded indicating the identity of the entity passing the resolution, i.e., the Bidding Company, each Member of the Bidding Consortium.

3) This format may be modified only to the limited extent required to comply with the local regulations and laws applicable to a foreign entity submitting this resolution. For example, reference to Companies Act 1956 / Companies Act 2013 (as the case may be) may be suitably modified to refer to the law applicable to the entity submitting the resolution. However, in such case, the foreign entity shall submit an unqualified opinion issued by the legal counsel of such foreign entity, stating that the Board resolutions are in compliance with the applicable laws of the respective jurisdictions of the issuing company and the authorizations granted therein are true and valid.]

Format 2

Format for the Board resolution of Technically / Financially Evaluated Entity / Ultimate Parent Company (in case credentials of such TEE/ FEE has been utilized by the Bidding Company or Bidding Consortium)

The Board, after discussion, at the duly convened Meeting on ..... [Insert date], with the consent of all the Directors present and in compliance of the provisions of the Companies Act, 1956 / 2013, passed the following Resolution:

RESOLVED THAT pursuant to the provisions of the Companies Act, 1956 / Companies Act, 2013 (as the case may be) and compliance thereof and as permitted under the Memorandum and Articles of Association of the company, approval of the Board be and is hereby accorded for issuing an Undertaking to the BPC, in the format specified in the RFP issued by the BPC, draft of which is attached hereto and initialed by the Chairman whereby the company undertakes to invest …….percent (.... %) of the total equity share capital of.....(Insert the name of SPV) representing the entire amount proposed to be invested by..... [insert the name of the Bidder or Member] for the said Project, in case of failure of.....[Insert the name of the Bidder or Member] to make such investment".

FURTHER RESOLVED THAT..... ,be and is hereby authorized to take all the steps required to be taken by the Company, including in particular, signing the said Undertaking, submitting the same to the BPC through ..... [Insert name of Bidding Company/Lead Member of the Consortium] of all the related documents, certified copy of this Board resolution or letter, undertakings etc, required to be submitted to BPC as part of the Bid or such other documents as may be necessary in this regard.

Certified True Copy

Company rubber stamp to be affixed

Note:

1. This certified true copy should be submitted on the letterhead of the Company, signed by the Company Secretary or any Whole-time Director/Manager (supported by a specific board resolution) of Bidding Company or Lead Member of the Consortium.

2. The contents of the format may be suitably re-worded indicating the identity of the entity passing the resolution.

3. This format may be modified only to the limited extent required to comply with the local regulations and laws applicable to a foreign entity submitting this resolution. For example, reference to Companies Act 1956 / Companies Act 2013 (as the case may be) may be suitably modified to refer to the law applicable to the entity submitting the resolution. However, in such case, the foreign entity shall submit an unqualified opinion issued by the legal counsel of such foreign entity, stating that the Board resolutions are in compliance with the applicable laws of the respective jurisdictions of the issuing company and the authorizations granted therein are true and valid.

ANNEXURE 11A – ILLUSTRATION FOR APPLICABLE BOARD RESOLUTION REQUIREMENTS UNDER CLAUSE 2.5.2

Investor in the TSP	Entities (other than Bidder) whose credentials (financial and/or technical) used by the Bidder for meeting RFP criteria	Applicable Board Resolutions	Requirement of Undertaking (Annexure 10)
Bidder himself for 100% equity	None	a) Format 1 of Annexure 11 - Resolution: 1, 2 and 4 from the Bidder	None
Bidder himself for 100% equity	Affiliate and/or Parent Company and/or Ultimate Parent	a) Format 1 of Annexure 11 - Resolution: 1, 2, and 4 from the Bidder b) Format 2 of Annexure 11 by either Technically/ Financially Evaluated Entity(ies) whose credentials have been used, or Ultimate Parent. Provided, if the Bidder himself is the Ultimate Parent, then Format 2 need not be provided.	Yes, by either Technically / Financially Evaluated Entity(ies) Affiliate(s) whose credentials have been used, or Ultimate Parent. Provided, if the Bidder himself is the Ultimate Parent, then the undertaking need not be provided.
Bidder himself + others (Affiliate and/or Parent Company and/or Ultimate Parent) in aggregate holding 100% equity	None	a) Format 1 of Annexure 11 - Resolution: 1,2, 3 and4 from the Bidder. b) Format 1 of Annexure 11 - Resolution: 1 from the Affiliate and /or Parent and /or Ultimate Parent investing in the equity	None
Bidder himself + others (Affiliate and/or Parent Company and/or Ultimate Parent) in aggregate holding 100% equity	Affiliate and/or Parent Company and/or Ultimate Parent	a) Format 1 of Annexure 11 - Resolution: 1,2, 3 and 4 from the Bidder. b) Format 1 of Annexure 11 - Resolution: 1 from the Affiliate and/or Parent	Yes, by either Parent/ Affiliate(s) whose credentials have been used, or Ultimate Parent

Investor in the TSP	Entities (other than Bidder) whose credentials (financial and/or technical) used by the Bidder for meeting RFP criteria	Applicable Board Resolutions	Requirement of Undertaking (Annexure 10)
		and/or Ultimate Parent investing in the equity c) Format 2 of Annexure 11 by either Parent / Affiliate(s) whose credentials have been used and /or Ultimate Parent investing in the equity	

ANNEXURE 12 - FORMAT FOR ILLUSTRATION OF AFFILIATES

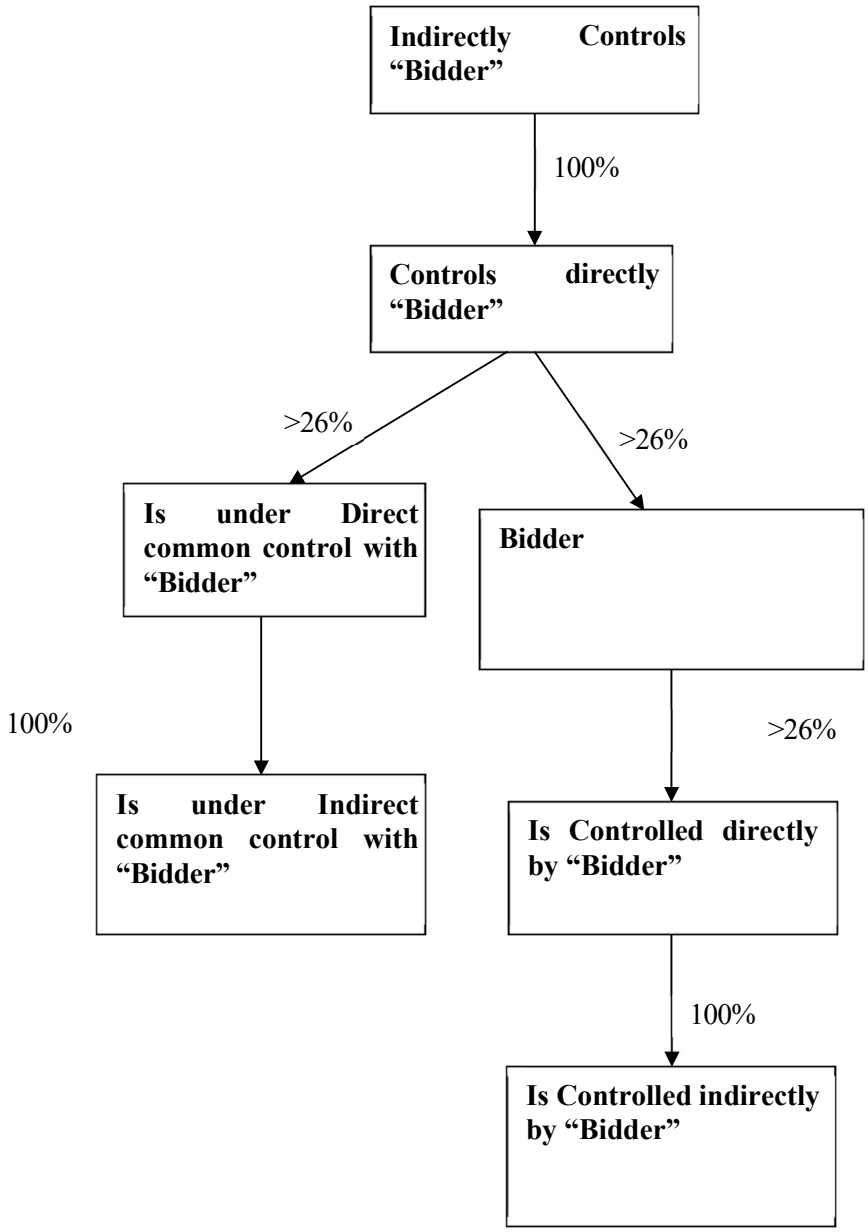

NOTE: Bidder to provide the illustration, as applicable in their case, duly certified by the Company Secretary and supported by documentary evidence in this regard.

ANNEXURE 13 - FORMAT FOR DISCLOSURE

[On the letter head of Bidding Company / Each Member in a Bidding Consortium]

Date: ……

DISCLOSURE

We hereby declare that the following companies with which we/ have direct or indirect relationship are also separately participating in this Bid process as per following details

S. No.	Name of the Company	Relationship
1.		
2.		
3.		

In case there is no such company please fill in the column "name of the company" as Nil.

Further we confirm that we don't have any Conflict of Interest with any other company participating in this bid process.

Certified as True

……..
(Signature)

Name: .....

Signature & Name of authorized signatory of the Company and Stamp

The above disclosure should be signed and certified as true by the authorized signatory of the Bidding Company or of the Member, in case of a Consortium).

ANNEXURE 14 - FORMAT OF THE BID BOND

FORMAT OF THE UNCONDITIONAL AND IRREVOCABLE BANK GUARANTEE FOR BID BOND

(To be on non-judicial stamp paper of appropriate value as per Stamp Act relevant to place of execution.)

In consideration of the ..... [Insert name of the Bidder] submitting the Bid inter alia for establishing the Inter-State transmission system for _____[Name of Project] on build, own, operate and transfer basis, in response to the RFP dated _____issued by _____[Name of BPC], and the Bid Process Coordinator (hereinafter referred to as BPC) agreeing to consider such Bid of ……. [Insert the name of the Bidder] as per the terms of the RFP, the [Insert name and address of the bank issuing the Bid Bond, and address of the Head Office] (hereinafter referred to as "Guarantor Bank") hereby agrees unequivocally, irrevocably and unconditionally to pay to _[Name of BPC] or its authorized representative at ___[Address of BPC] forthwith on demand in writing from _____[Name of BPC] or any representative authorized by it in this behalf, any amount up to and not exceeding Rupees _____ Only (Rs _____ Crore), on behalf of M/s [Insert name of the Bidder].

This guarantee shall be valid and binding on the Guarantor Bank up to and including …..... [Date to be inserted on the basis of Clause 2.11 of this RFP] and shall not be terminable by notice or any change in the constitution of the Guarantor Bank or by any other reasons whatsoever and our liability hereunder shall not be impaired or discharged by any extension of time or variations or alternations made, given, or agreed with or without our knowledge or consent, by or between concerned parties.

Our liability under this Guarantee is restricted to Rupees _____Only (Rs _____Crore). Our Guarantee shall remain in force until ..... [Date to be inserted on the basis of Clause 2.11 of this RFP]. _____[Name of BPC] or its authorized representative shall be entitled to invoke this Guarantee until .....[Insert Date, which is three sixty five days (365) days after the date in the preceding sentence]. The Guarantor Bank hereby expressly agrees that it shall not require any proof in addition to the written demand from _____[Name of BPC] or its authorized representative, made in any format, raised at the above mentioned address of the Guarantor Bank, in order to make the said payment to _____[Name of BPC] or its authorized representative.

The Guarantor Bank shall make payment hereunder on first demand without restriction or conditions and notwithstanding any objection, disputes, or disparities raised by the Bidder or any other person. The Guarantor Bank shall not require ___ [Name of BPC] or its authorized representative to justify the invocation of this BANK GUARANTEE, nor shall the Guarantor Bank have any recourse against _____[Name of BPC] or its authorized representative in respect of any payment made hereunder.

This BANK GUARANTEE shall be interpreted in accordance with the laws of India.

The Guarantor Bank represents that this BANK GUARANTEE has been established in such form and with such content that it is fully enforceable in accordance with its terms as against the Guarantor Bank in the manner provided herein.

This BANK GUARANTEE shall not be affected in any manner by reason of merger, amalgamation, restructuring or any other change in the constitution of the Guarantor Bank.

This BANK GUARANTEE shall be a primary obligation of the Guarantor Bank and accordingly _____[Name of BPC] or its authorized representative shall not be obliged before enforcing this BANK GUARANTEE to take any action in any court or arbitral proceedings against the Bidder, to make any claim against or any demand on the Bidder or to give any notice to the Bidder to enforce any security held by _____[Name of BPC] or its authorized representative or to exercise, levy or enforce any distress, diligence or other process against the Bidder.

Notwithstanding anything contained hereinabove, our liability under this Guarantee is restricted to Rupees _____Only (Rs ___Crore) and it shall remain in force until …… [Date to be inserted on the basis of Clause 2.11 of RFP], with an additional claim period of three hundred sixty five (365) days thereafter. We are liable to pay the guaranteed amount or any part thereof under this BANK GUARANTEE only if _____[Name of BPC] or its authorized representative serves upon us a written claim or demand.

In witness whereof the Bank, through its authorized officer, has set its hand and stamp on this…….. day of ..... at……

Witness:

1……. Signature: ……..
Name and Address Name: ……..……..

2. …….. Designation with Stamp:
Name and Address

Signature …….

Attorney as per power of attorney

No.……

For:
….....[Insert Name of the Bank]

Banker's Stamp and Full Address:

Dated this……day of……. 20……..

Notes:

1. The Stamp Paper should be in the name of the Executing Bank.

ANNEXURE 14A- FORMAT OF THE SURETY BOND FOR BID SECURITY

FORMAT OF THE SURETY BOND

(To be on non-judicial stamp paper of appropriate value as per Stamp Act relevant to place of execution.)

In consideration of the..... [Insert name of the Bidder] submitting the Bid inter alia for establishing the Inter-State transmission system for _____[Name of Project] on build, own, operate and transfer basis, in response to the RFP dated issued by _____[Name of BPC], and the Bid Process Coordinator (hereinafter referred to as BPC) agreeing to consider such Bid of _____[Insert the name of the Bidder] as per the terms of the RFP, the _____[Insert name of Surety Insurer issuing the surety bond and address of Head Office] (hereinafter referred to as "Surety Insurer") hereby agrees unequivocally, irrevocably and unconditionally to pay to_____[Name of BPC] or its authorized representative at _____ [Address of BPC] forthwith on demand in writing from _____.[Name of BPC] or any representative authorized by it in this behalf, any amount up to and not exceeding Rupees _____Only (Rs ...Crore) (the "Surety Bond"),on behalf of M/s [Insert name of the Bidder].

This surety bond shall be valid and binding on the Surety Insurer up to and including ..... [Date to be inserted on the basis of Clause 2.11 of this RFP] and shall not be terminable by notice or any change in the constitution of the Surety Insurer or by any other reasons whatsoever and our liability hereunder shall not be impaired or discharged by any extension of time or variations or alternations made, given, or agreed with or without our knowledge or consent, by or between concerned parties.

Our liability under this Surety Bond is restricted to Rupees _____ Only (Rs _____Crore). The Surety Bond shall remain in force until.....[Date to be inserted on the basis of Clause 2.11 of this RFP]. _____ [Name of BPC] or its authorized representative shall be entitled to invoke this Surety bond until .....[Insert Date, which is one hundred eighty (180) days after the date in the preceding sentence]. The Surety Insurer hereby expressly agrees that it shall not require any proof except for the written demand from _____ Name of BPC] or its authorized representative, made in any format, raised at the above mentioned address of the Surety Insurer, in order to make the said payment to _____[Name of BPC] or its authorized representative.

The Surety Insurer shall make payment hereunder on first demand without restriction or conditions and notwithstanding any objection, disputes, or disparities raised by the Bidder or any other person. The Surety Insurer shall not require _____ [Name of BPC] or its authorized representative to justify the invocation of this surety bond, nor shall the Surety Insurer have any recourse against _____ [Name of BPC] or its authorized representative in respect of any payment made hereunder.

This Surety Bond shall be interpreted in accordance with the laws of India.

The Surety Insurer represents that this Surety Bond has been established in such form and with such content that it is fully enforceable in accordance with its terms as against the Surety Insurer in the manner provided herein.

This Surety Bond shall not be affected in any manner by reason of merger, amalgamation, restructuring, liquidation, winding up, dissolution or any other change in the constitution of the Surety Insurer.
This Surety Bond shall be a primary obligation of the Surety Insurer and accordingly _____ [Name of BPC] or its authorized representative shall not be obliged before enforcing this Surety Bond to take any action in any court or arbitral proceedings against the Bidder, to make any claim against or any demand on the Bidder or to give any notice to the Bidder to enforce any security held by _____ [Name of BPC] or its authorized representative or to exercise, levy or enforce any distress, diligence or other process against the Bidder.

The Surety Insurer declares that it has power to issue this Surety Bond and discharge the obligations contemplated herein, the undersigned is duly authorised and has full power to execute this Surety Bond for and on behalf of the Surety Insurer.

Notwithstanding anything contained hereinabove, our liability under this surety bond is restricted to Rupees ..... Only (Rs _____ Crore) and it shall remain in force until [Date to be inserted on the basis of Clause 2.11 of RFP], with an additional
claim period of one hundred eighty (180) days thereafter. We are liable to pay the guaranteed amount or any part thereof under this Surety Bond only if _____[Name of BPC] or its authorized representative serves upon us a written claim or demand.

In witness where of:

Signature.....

Name: .....

Power of attorney No/ Employee No. as applicable.:……

For:

..... [Insert Name of the Surety Insurance Company

Banker's Seal and Full Address, including mailing address of the Head Office

Notes:

1. The Stamp Paper should be in the name of the Executing Insurance Company.

ANNEXURE 14B - Format of Payment on Order Instrument to be issued by IREDA/REC/PFC

(to be submitted separately for each Project)

No. Date

…..... [Insert name of BPC]

_____

Reg: M/s_____(insert name of the bidding entity)- **Issuance of Payment on Order Instrument for an amount of Rs. _____**

Dear Sir,

1. At the request of M/s ..... (Insert name of the bidding entity), this Payment on Order Instrument (POI) for an amount of Rs..... (Rupees .....(In words)) is being issued by M/s. ..... (Insert Name of the POI issuing Agency) ('IREDA/REC/PFC'). This Payment on Order Instrument comes into force immediately.

2. In consideration of the ..... [Insert name of the Bidding Entity] (hereinafter referred to as 'Bidder') submitting the response to RFP issued by [Insert name of BPC] for the project ..... [Insert name of the project] and.....[Insert name of BPC] considering such response to the RFP of M/s..... [Insert the name of Bidding Entity] as per the terms of the RFP, the .....[Insert name & address of IREDA/PFC/REC] hereby agrees unequivocally, irrevocably and unconditionally to pay to [Insert name of BPC] at [Insert Name of the Place from the address of the BPC] forthwith without demur on demand in writing from..... [Insert name of BPC] or any Officer authorized by it in this behalf, any amount up to and not exceeding Rupees [Insert amount not less than the bid bond value indicated in RFP] only, on behalf of M/s. [Insert name of the Bidding Entity].

3. In consideration of the above facts, IREDA/REC/PFC, having its registered office at ..... agrees to make payment for the sum of Rs ..... (in words .....) to.....[Insert name of BPC] on the following conditions:

    a. IREDA/REC/PFC agrees to make payment of the above said amount unconditionally, without demur and without protest within a period of _____ days of receipt of request from ..... [Insert name of BPC] within the validity period of this letter as specified herein;

    b. The commitment of IREDA/REC/PFC, under this Payment on Order Instrument will have the same effect as that of the commitment under the Bank Guarantee issued by any Public Sector Bank and shall be enforceable in the same manner as in the case of a Bank Guarantee issued by a Bank and the same shall be irrevocable and shall be honoured irrespective of any agreement or its breach between

IREDA/REC/PFC or its constituents notwithstanding any dispute that may be raised by them against ..... [Insert name of BPC];

c. The liability of IREDA/REC/PFC continues to be valid and binding on IREDA/REC/PFC and shall not be terminated, impaired, and discharged by virtue of change in its constitution and specific liability under this POI shall be binding on its successors or assignors;

d. The liability of IREDA/REC/PFC shall continue to be valid and binding on IREDA/REC/PFC and shall not be terminated/impaired/discharged by any extension of time or variation and alteration made, given or agreed with or without knowledge or consent of the parties ([Insert name of BPC] and Bidder), subject however to the maximum extent of amount stated herein and IREDA/REC/PFC is not liable to any interest or costs etc.;

e. This Payment on Order Instrument can be invoked either partially or fully, till the date of validity;

f. IREDA/REC/PFC agrees that it shall not require any proof in addition to the written demand by [Insert name of BPC] made in any format within the validity period. IREDA/REC/PFC shall not require [Insert name of BPC] to justify the invocation of the POI against the Bidder, to make any claim against or any demand against the Bidder or to give any notice to the Bidder;

g. The POI shall be the primary obligation of IREDA/REC/PFC and ..... [Insert name of BPC] shall not be obliged, before enforcing the POI, to take any action in any court or arbitral proceedings against the Bidder;

h. The POI shall not be affected in any manner by reason of merger, amalgamation, restructuring or any other changes in constitution of IREDA/REC/PFC;

i. Neither the ..... [Insert name of BPC] is required to justify the invocation of this POI nor shall IREDA/REC/PFC have any recourse against the ..... [Insert name of BPC] in respect of the payment made under this POI.

4. Notwithstanding anything contrary contained anywhere in this POI or in any other documents, this POI is and shall remain valid up to [Insert the date of validity of the POI as per Clause 2.11.1 of the RFP], with an additional claim period of three hundred and sixty-five (365) days thereafter and IREDA/REC/PFC shall make payment thereunder only if a written demand or request is raised within the said date and to the maximum extent of Rs..... and IREDA/REC/PFC shall in no case be liable for any interest, costs, charges, and expenses and IREDA's/REC's/PFC's liability in no case will exceed more than the above amount stipulated.

5. In pursuance of the above, IREDA/REC/PFC and [Insert name of BPC] have signed an Umbrella Agreement dated..... setting out the terms and conditions for issue of letter

of undertaking by IREDA/REC/PFC to ..... [Insert name of BPC] and the said terms and conditions shall be read as a part of this POI issued for the project of PP mentioned above.

Thanking you,

Yours faithfully
For and on behalf
of
M/s.....
(Name of the POI issuing agency)
( )
General Manager

Copy to
M/s..... As per their request

( )
General Manager

ANNEXURE 15 - FORMAT FOR CONTRACT PERFORMANCE GUARANTEE

(To be on non-judicial stamp paper of appropriate value as per Stamp Act relevant to place of execution.
Foreign entities submitting Bids are required to follow the applicable law in their country)

In consideration of the .....[Insert name of the SPV or Selected Bidder on behalf of SPV or Lead Member in case of the Consortium, with address] agreeing to undertake the obligations under the Transmission Service Agreement dated …… and the other RFP Project Documents and the Nodal Agency and ..... …_[Name of BPC], agreeing to execute the RFP Project Documents with the Selected Bidder, regarding setting up the Project, the……[Insert name and address of the bank issuing the guarantee and address of the head office] (hereinafter referred to as "Guarantor Bank") hereby agrees unequivocally, irrevocably and unconditionally to pay to the Nodal Agency at..... [Insert Place and Address of the Nodal Agency indicated in TSA] forthwith on demand in writing from the Nodal Agency or any Officer authorized by it in this behalf, any amount up to and not exceeding Rupees..... Crores (Rs…….) only [Insert the amount of the bank guarantee] on behalf of M/s..... [Insert name of the Selected Bidder / SPV].

This guarantee shall be valid and binding on the Guarantor Bank up to and including ….....and shall not be terminable by notice or any change in the constitution of the Bank or the term of the Transmission Service Agreement or by any other reasons whatsoever and our liability hereunder shall not be impaired or discharged by any extension of time or variations or alternations made, given, or agreed with or without our knowledge or consent, by or between parties to the respective agreement.

Our liability under this Guarantee is restricted to Rupees.....Crores (Rs……) only. Our Guarantee shall remain in force until…… [Insert the date of validity of the Guarantee as per Clause 2.12.1 of the RFP]. The Nodal Agency shall be entitled to invoke this Guarantee up to three hundred sixty five (365) days of the last date of the validity of this Guarantee.

The Guarantor Bank hereby expressly agrees that it shall not require any proof in addition to the written demand from the Nodal Agency, made in any format, raised at the above mentioned address of the Guarantor Bank, in order to make the said payment to the Nodal Agency.

The Guarantor Bank shall make payment hereunder on first demand without restriction or conditions and notwithstanding any objection by _____[Name of SPV], …… [Insert name of the Selected Bidder], ……. [Insert name of the TSP] and/or any other person. The Guarantor Bank shall not require the Nodal Agency to justify the invocation of this BANK GUARANTEE, nor shall the Guarantor Bank have any recourse against the Nodal Agency in respect of any payment made hereunder.

This BANK GUARANTEE shall be interpreted in accordance with the laws of India.

The Guarantor Bank represents that this BANK GUARANTEE has been established in such form and with such content that it is fully enforceable in accordance with its terms as against the Guarantor Bank in the manner provided herein.

This BANK GUARANTEE shall not be affected in any manner by reason of merger, amalgamation, restructuring, liquidation, winding up, dissolution or any other change in the constitution of the Guarantor Bank.

This BANK GUARANTEE shall be a primary obligation of the Guarantor Bank and accordingly the Nodal Agency shall not be obliged before enforcing this BANK GUARANTEE to take any action in any court or arbitral proceedings against _____[Name of SPV] or the Selected Bidder, to make any claim against or any demand on _____[Name of SPV] or the Selected Bidder, as the case may be, or to give any notice to _____[Name of SPV] or the Selected Bidder, as the case may be, or to enforce any security held by the Nodal Agency or to exercise, levy or enforce any distress, diligence or other process against ……_[Name of SPV] or the Selected Bidder, as the case may be.

The Guarantor Bank acknowledges that this BANK GUARANTEE is not personal to the Nodal Agency and may be assigned, in whole or in part, (whether absolutely or by way of security) by Nodal Agency to any entity to whom the Nodal Agency is entitled to assign its rights and obligations under the Transmission Service Agreement.

The Guarantor Bank hereby agrees and acknowledges that the Nodal Agency shall have a right to invoke this Bank Guarantee either in part or in full, as it may deem fit.

Notwithstanding anything contained hereinabove, our liability under this Guarantee is restricted to Rupees ……..Crores (Rs.....) only and it shall remain in force until [Date to be inserted on the basis of Article 3.1.2 of TSA], with an additional claim period of three hundred sixty five (365) days thereafter. This BANK GUARANTEE shall be extended from time to time for such period, as may be desired by .....[Insert name of the Selected Bidder or Lead Member in case of the Consortium or SPV]. We are liable to pay the guaranteed amount or any part thereof under this Bank Guarantee only if the Nodal Agency serves upon us a written claim or demand.

In witness where of:

Signature……..

Name: ……

Power of attorney No.: ……...
For:
…..... [Insert Name of the Bank]
Banker's Seal and Full Address, including mailing address of the Head Office

Notes:
1. The Stamp Paper should be in the name of the Executing Bank.

ANNEXURE 15A -FORMAT FOR SURETY INSURANCE CONTRACT
(ISB for CPG)

(To be on non-judicial stamp paper of appropriate value as per Stamp Act relevant to place of execution.

Foreign entities submitting Bids are required to follow the applicable law of India)

In consideration of the ..... [Insert name of the SPV or Selected Bidder on behalf of SPV or Lead Member in case of the Consortium, with address] (hereinafter referred to as the **'Principal Debtor'** for the purposes of this Surety Insurance Contract as provided in Section 126 of the Indian Contract Act, 1872) having been selected to undertake the Transmission Project on the terms and conditions contained in the Transmission Service Agreement dated *I* to be executed as per the Model Transmission Service
Agreement provided along with the Request for Proposal **('RFP')** and other RFP Project Documents, subject to the condition of providing a Performance Bank Guarantee or a Surety Insurance Contract guaranteeing/insuring the due performance of the obligations under the Transmission Service Agreement, to the Central Transmission Utility of India Limited **('CTUIL')** [herein after referred to as the Nodal Agency], the [Insert name and address of the Insurance Company issuing the Surety Insurance Contract and address of the head office] (hereinafter referred to as **"Surety")** hereby agrees unequivocally, irrevocably, absolutely and unconditionally, without demur, to pay to the Nodal Agency at [Insert Place and Address of the Nodal Agency indicated in Transmission Service Agreement, or to the designated Bank Account of the Nodal Agency, namely] forthwith on demand in writing from the Nodal Agency, or any Officer authorized by it in this behalf, intimated to the Surety at the address mentioned above, any amount as may be decided by the Nodal Agency not exceeding Rupees .....Crores (Rs.....) only [Insert the amount of the Surety Insurance Contract]

The Surety hereby acknowledges, accepts and confirms that the Surety has received from the Principal Debtor, by way of premium the entire consideration for the Surety to execute, in favour of the Nodal Agency, this Surety Insurance Contract, as extended by the Surety from time to time and assuming the obligation to pay to the Nodal Agency the amount in terms hereof, without any requirement for payment of any other consideration to the Surety by the Principal Debtor, or otherwise.

This Surety Insurance Contract shall be valid and binding on the Surety, as the principal obligation of the Surety to pay on demand by the Nodal Agency, and shall not be terminable by notice or any change in the constitution of the Surety or the term of the Transmission Service Agreement or by any other reasons whatsoever and the liability hereunder of the Surety shall not be impaired or discharged by any extension of time or variations or alternations made, given, or agreed (with or without the knowledge or consent of the Surety) by or between the Principal Debtor and the Nodal Agency.

The liability of the Surety under this Surety Insurance Contract is restricted to Rupees ..... Crores (Rs .....) only. The Surety Insurance Contract shall remain in force until [Insert the date of validity of the Surety Insurance Contract]. The Nodal Agency shall be entitled to invoke this Surety Insurance Contract up to three hundred sixty five (365) days after the last date of the validity of this Surety Insurance Contract.

The Surety hereby expressly agrees that it shall not require any proof except for the written demand from the Nodal Agency, containing the statement that the contractor has failed to meet its contractual obligations faised at the above mentioned address of the Surety (address of Surety office should be a place in NCR only) and the Surety shall pay the amount without reference to the Principal Debtor.

Any such demand made by the Nodal Agency on the Surety shall be conclusive and binding not withstanding any difference between the Nodal Agency and the Principal Debtor or any dispute pending before any Court, Tribunal, Arbitrator or any other authority. The Surety undertakes not to revoke this guarantee during its currency without previous consent of the Nodal Agency and further agrees that the Surety Insurance Contract herein contained shall continue to be enforceable till the Nodal Agency discharges this contract or till the expiry of tenor(including Claim period) whichever is earlier.

The Surety shall make payment hereunder within two (02) working days on first demand without restriction or conditions and notwithstanding any objection by the Principal Debtor, namely, ... [Insert name of SPV], or ..... [Insert name of the Selected Bidder], or ..... [Insert name of the TSP] and/or any other person. The Surety shall not require the Nodal Agency to justify the invocation of this Surety Insurance Contract, nor shall the Surety have any recourse against the Nodal Agency in respect of any payment made hereunder.

This SURETY INSURANCE CONTRACT shall be interpreted in accordance with the laws of India.

This SURETY INSURANCE CONTRACT is being executed by the Surety in terms of the IRDAI (Surety Insurance Contract) Guidelines, 2022 and the Surety hereby acknowledges, accepts and confirms that this Surety Insurance Contract shall be a Contract of Guarantee as provided under Section 126 of the Indian Contract Act, 1872 and further shall be covered by Section 14(3)(b) of the Insolvency and Bankruptcy Code, 2016 (as amended) shall be enforceable as such.

The Surety represents that this Surety Insurance Contract has been established in such form and with such content that it is fully enforceable in accordance with its terms as against the Surety in the manner provided herein.

This SURETY INSURANCE CONTRACT shall not be affected in any manner by reason of merger, amalgamation, restructuring, liquidation, winding up, dissolution or any other change in the constitution of the Surety.

In order to give effect to this surety Bond, the Nodal Agency shall be entitled to act as if the surety insurer were the principal debtor and any change in the constitution of the contractor and/or the surety insurer, whether by their absorption with any other body or corporation or otherwise, shall not in any way or manner affect the liability or obligation of the surety insurer under this surety Bond.

This SURETY INSURANCE CONTRACT shall be a primary obligation of the Surety as a Principal to pay on demand by the Nodal Agency and the Nodal Agency shall not be obliged before enforcing this Surety Insurance Contract to take any action in any court or arbitral proceedings against the Principal Debtor, namely,..... [Insert name of SPV], or ..... [Insert name of the Selected Bidder], or .....[Insert

name of the TSP] and/or any other person, as the case may be, to make any claim against or any demand on the Principal Debtor, namely, ... [Insert name of SPV], or ..... [Insert name of the Selected Bidder], or ..... [Insert name of the TSP] and/or any other person, as the case may be, or to give any notice to Principal Debtor, namely..... [Insert name of SPV], or .....[Insert name of the Selected Bidder], or..... [Insert name of the TSP] and/or any other person, as the case may be, or to enforce any security held by the Nodal Agency or to exercise, levy or enforce any distress, diligence or other process against the Principal Debtor, namely, ... [Insert name of SPV], or ..... [Insert name of the Selected Bidder], or .....[Insert name of the TSP] and/or any other person, as the case may be.

The Surety acknowledges that this Surety Insurance Contract is not personal to the Nodal Agency and may be assigned, in whole or in part, (whether absolutely or by way of security) by Nodal Agency to any entity to whom the Nodal Agency is entitled to assign its rights and obligations under the Transmission Service Agreement Provided that any such assignment shall be in compliance with the relevant provisions of the Insurance Act 1938

The Surety hereby agrees and acknowledges that the Nodal Agency shall have a right to invoke this Surety Insurance Contract either in part or in full, as it may deem fit. In case of invocation of this Surety Insurance Contract in part, besides making payment for the part of Surety Insurance Contract invoked, surety at the request of nodal agency shall amend the value of Surety Insurance Contract to the extent of balance amount.

The Surety undertakes not to revoke this Surety Contract during its currency, except with the previous express consent of the Nodal Agency in writing and declares and warrants that it has the power to issue this Surety Contract and the undersigned has full powers to do so on behalf of the Surety

In witness where of:
Signature.....
Name: .....

Power of attorney No/ Employee No. as applicable. .....:

For:
..... [Insert Name of the Surety-Insurance Companyl
Banker's Seal and Full Address, including mailing address of the Head Office
Notes:

1. The Stamp Paper should be in the name of the Executing Insurance Company.

ANNEXURE 15B - FORMAT FOR ISSUANCE OF PAYMENT ON ORDER INSTRUMENT

(POI for CPG)

Format for Issuance of Payment on Order Instrument

Dear Sir,

1. Indian Renewable Energy Development Agency Limited ('IREDA")/PFC/REC has sanctioned a non-fund-based limit loan of Rs. (Rupees..... Only) to M/s. ..... [Insert name of SPV or selected Bidder] under the Loan Agreement executed on..... to execute Transmission System Projects.

2. In consideration of the..... [Insert name of the SPV or Selected Bidder on behalf of SPV or Lead Member in case of the Consortium, with address] for the purposes of this Payment on Order Instrument ("POI") having been selected to undertake the Transmission Project on the terms and conditions contained in the Transmission Service Agreement dated ..... *I* to be executed as per the draft of the Model Transmission Service Agreement provided along with the Request for Proposal („RFP") and other RFP Project Documents, subject to the condition of providing a POI guaranteeing the due performance of the obligations under the Transmission Service Agreement to the Nodal Agency/Central Transmission Utility of India Limited („CTUIL"), the.....[Insert name and address of the non-banking financial institutions(IREDA/PFC/REC) issuing the POI and address of the head office] (hereinafter referred to as **"Guarantor")** hereby agrees unequivocally, irrevocably, absolutely and unconditionally, without demur, to pay to the Nodal Agency at ..... [Insert Place and Address of the Nodal Agency indicated in Transmission Service Agreement, or to the designated Bank Account of the Nodal Agency, namely ……..] forthwith on demand in writing from the Nodal Agency, or any Officer authorized by it in this behalf, intimated to the Guarantor at the address mentioned above, any amount as may be decided by the Nodal Agency not exceeding Rupees ..... Crores (Rs .....) only
[Insert the amount of Payment on Order Instrument]

3. At the request of ..... and on behalf of M/s. ..... , [Insert name of SPV or selected Bidder] this Payment on Order Instrument (POI) for an amount of Rs. ..... (Rupees .....) is being issued with IREDA/PFC/REC assuming the obligations to remit such amount to CTUIL from the sanctioned loan.

4. This Payment on Order Instrument comes into force immediately and IREDA/PFC/REC confirms that it has sufficient amount out of the sanctioned loan and shall maintain the required amount to pay under this Payment on Order Instrument, during the validity and claim period of this Payment on Order Instrument.

5. This POI has been issued by IREDA/PFC/REC utilizing the credit limit of M/s.....[Insert name of SPV or selected Bidder]

IREDA/PFC/REC confirms that its liability to pay under this Payment on Order Instrument shall be primary and independent of whether at the time of invocation of Payment on Order Instrument, the sanctioned funds are available or not and notwithstanding, the status of M/s [Insert name of SPV or selected Bidder] at the relevant time and to whether IREDA/PFC/REC is able to recover the amount advanced by it to the said developer.

6. IREDA/PFC/REC and M/s.[Insert name of SPV or selected Bidder] hereby acknowledges, accepts and confirms that this Payment on Order Instrument shall be a Contract of Guarantee as provided under Section 126 of the Indian Contract Act, 1872 and further shall be covered by Section 14(3)(b) of the Insolvency and Bankruptcy Code, 2016 (as amended) shall be enforceable as such.

7. IREDA/PFC/REC liability under this POI is restricted to Rupees Crores (Rs.....) only. This POI shall remain in force until ..... [Insert the date of validity of the POI]. The Nodal Agency shall be entitled to invoke this POI up to three hundred sixty-five (365) days after the last date of the validity of this POI. This POI shall be extended from time to time for such period, as may be desired by the TSP.

8. The Guarantor hereby expressly agrees that it shall not require any proof except for the written demand from the Nodal Agency, raised at the above mentioned address of the Guarantor (address of Guarantor office should be in NCR only) and the Guarantor shall pay the amount to the Nodal Agency without reference to the TSP.

9. Any such demand made by the Nodal Agency on the Guarantor shall be conclusive and binding not withstanding any difference between the Nodal Agency and the TSP or any dispute pending before any Court, Tribunal, Arbitrator or any other authority. The Guarantor undertakes not to revoke this guarantee during its currency without previous consent of the Nodal Agency and further agrees that the POI herein contained shall continue to be enforceable till the Nodal Agency discharges this contract or till the expiry of tenure or (including Claim period) whichever is earlier.

10. The Guarantor shall make payment hereunder within two (02) working days on first demand without restriction or conditions and notwithstanding any objection or disputes raised by the TSP, namely,..... [Insert name of SPV], or [Insert name of the Selected Bidder], or..... [Insert name of the TSP] and/or any other person. The Guarantor shall not require the Nodal Agency to justify the invocation of this POI, nor shall the Guarantor have any recourse against the Nodal Agency in respect of any payment made hereunder.

11. This POI shall be interpreted in accordance with the laws of India.

12. The Guarantor represents that this POI Contract has been established in such form and with such content that it is fully enforceable in accordance with its terms as against the Guarantor in the manner provided herein.

13. This POI shall not be affected in any manner by reason of merger, amalgamation, restructuring, liquidation, winding up, dissolution or any other change in the constitution of the Guarantor.

14. This POI Contract shall be a primary obligation of the Guarantor as a Principal to pay on demand by the Nodal Agency and the Nodal Agency shall not be obliged before enforcing this POI Contract to take any action in any court or arbitral proceedings against the TSP, namely, ... [Insert name of SPV], or.....[Insert name of the Selected Bidder], or.....[Insert name of the TSP] and/or any other person, as the case may be to make any claim against or any demand on the TSP, namely, ... [Insert name of SPV], or ..... [Insert name of the Selected Bidder], or ..... [Insert name of the TSP] and/or any other person, as the case may be, or to give any notice to TSP, namely..... [Insert name of SPV], or..... [Insert name of the Selected Bidder], or ..... [Insert name of the TSP] and/or any other person, as the case may be, or to enforce any security held by the Nodal Agency or to exercise, levy or enforce any distress, diligence or other process against the TSP, namely, ... [Insert name of SPV], or.[Insert name of the Selected Bidder], or .....[Insert name of the TSP] and/or any other person, as the case may be.

15. The Guarantor acknowledges that this POI Contract is not personal to the Nodal Agency and may be assigned, in whole or in part, (whether absolutely or by way of security) by Nodal Agency to any entity to whom the Nodal Agency is entitled to assign its rights and obligations under the Transmission Service Agreement.

16. The Guarantor hereby agrees and acknowledges that the Nodal Agency shall have a right to invoke this POI Contract either in part or in full, as it may deem fit. In case of invocation of this POI Contract in part, besides making payment for the part of POI Contract invoked, Guarantor at the request of Nodal Agency shall amend the value of POI Contract to the extent of balance amount.

IN WITNESS WHERE OF the non- banking financial institutions through its authorized officer, has set its hand and stamp on this..... day of.....at.....

Signature .....
Name:
.....
Power of attorney No.:
.....For:
.....[Insert Name of the non- banking financial institutions Company]
Seal and Full Address, including mailing address of the Head Office

ANNEXURE 16 – FORMAT OF CHECKLIST FOR TECHNICAL BID SUBMISSION REQUIREMENTS

[This format needs to be duly filled in, signed by the authorized signatory of the Bidder (Bidding Company / Lead Member in case of a Bidding Consortium) and submitted along with the Bidder's Technical Bid]

Technical Bid Submission Requirements	Response (Yes / No)
1. Format for the Covering Letter on the letterhead of Bidding Company or Lead Member of the Consortium, as applicable; 2. Format for Letter of Consent from each Consortium Member, including Lead Member, on their respective letterheads; 3. Format for evidence of authorized signatory's authority; 4. Board resolution from the Bidding Company / Lead Member of the Consortium in favour of the person executing the Power of Attorney as per **Annexure 3**; 5. Power of Attorney from each Consortium Member in favour of Lead Member to be provided by each of the other Members of the Consortium as per **Annexure 4**; 6. Board Resolution from each Member of the Consortium, other than the Lead Member, in favour of their respective authorized representatives for executing the POA, Consortium Agreement and signing of the requisite formats; 7. Format for Bidder's composition and ownership structure, along with status of equity holding (owning ten percent or more of the total paid up equity) not earlier than thirty (30) days prior to the Bid Deadline as per **Annexure 5**; 8. Consortium Agreement duly signed as per **Annexure 6**, along with Appendix-1, indicating the responsibilities and obligations of each Member of the Consortium; 9. Format for Qualification Requirement: a. Calculation sheets, detailing computation of Net-worth considered for meeting Qualifying Requirements, duly signed and stamped by the Statutory Auditor of the Bidding Company / each Member in case of a Bidding Consortium / FEE in cases where credentials of FEE is taken; b. Calculation sheets, detailing computation of capital expenditure of projects and revenue received in construction projects considered for meeting Qualification Requirements, duly signed and stamped by the Statutory Auditor of the Bidding Company / Lead Member in case of Bidding Consortium / TEE in cases where credentials of TEE is taken;	

Technical Bid Submission Requirements	Response (Yes / No)
c. Last financial year unconsolidated / consolidated audited annual accounts / statements, as the case may be, of the Financially Evaluated Entity / Technical Evaluated Entity	
d. Unconsolidated audited annual accounts of both the TEE and the Bidding Company/Lead member, as applicable, from the financial years in which financial closure was achieved till the financial year in which the said project was completed / commissioned.	
10. Copy of the Memorandum and Articles of Association and certificate of incorporation or other organizational document (as applicable), including their amendments, certified by the Company Secretary of Bidding Company or each Member in case of a Consortium including Lead Member.	
11. Attachment of **Annexure 7(D)**, detailing projects completed / commissioned and for which commercial operation has commenced including Executive Summary for each project.	
12. For each project listed in the attachment above, certified true copy of the certificates of final acceptance and / or certificates of good operating performance duly issued by owners or clients for the project, duly signed by authorized signatory in support of technical capability as defined in Clause 2.1.2 of RFP.	
13. Authority letter in favour of BPC from the Bidder/every Member of the Consortium authorizing the BPC to seek reference from their respective bankers & others.	
14. Authorization from Parent / Affiliate of Bidding Company / Member of Bidding Consortium whose technical / financial capability has been used by the Bidding Company / Member of Bidding Consortium.	
15. Initialing of all pages of Technical Bid by the Authorized Signatory in whose favour the POA (**Annexure 3**) has been executed.	
16. Format for Illustration of Affiliates at the most seven (7) days prior to the Bid Deadline, duly certified by Company Secretary and supported by documentary evidence.	
17. Certified copy of the Register of Members / Demat Account Statement, Share Certificate, Annual Return filed with ROC etc. submitted as documentary evidence along with **Annexure 12**.	
18. Format for Disclosure by Bidding Company / each Member of the Consortium.	
19. Format for Affidavit by the Bidding Company / each Member of the Consortium	

Technical Bid Submission Requirements	Response (Yes / No)
20. Format for Authorization submitted in Non-Judicial stamp paper duly notarized.	
21. Bidders Undertaking and details of Equity Investment 22. Proof of Payment of RFP Fees 23. Bid Bond/Surety Bond/Payment on Order Instrument 24. Board Resolution as per Annexure 11 (If required)	

[**Note:** The checklist is not exhaustive. Bidders are required to submit all the information/documents as per requirement of RFP]

For and on behalf of Bidder

M/s. …….

……..
(Signature of authorized signatory)

ANNEXURE 17 – LIST OF BANKS

All Scheduled Commercial Banks as per Second Schedule of RBI Act-1934 and any amendments thereof.

ANNEXURE 18 - GRID MAP OF THE PROJECT

Transmission Grid Map indicating the details of the Project is given below:

ANNEXURE 19 - FORMAT FOR CLARIFICATIONS / AMENDMENTS ON THE RFP / RFP PROJECT DOCUMENTS

S. No.	Name of the Document	Clause No. and Existing provision	Clarification required	Suggested text for the amendment	Rationale for the Clarification or Amendment

Signature ……

Name……...

For

Bidder's Rubber Stamp and Full Address.

(Note: This format shall be used for submission of requests for clarifications/ amendments on the draft RFP Project Documents as per the provisions of Clause 2.3.1)

ANNEXURE 20 - LIST FOR RFP PROJECT DOCUMENTS

ENCLOSURE 1: TRANSMISSION SERVICE AGREEMENT (Provided separately)

ENCLOSURE 2: SHARE PURCHASE AGREEMENT (Provided Separately)

ANNEXURE 21 - FORMAT FOR FINANCIAL BID

[To be uploaded online]

Quoted Transmission Charges ……..

Notes

1. The Bidders are required to ensure compliance with the provisions of Clause 2.5.3 of this RFP.

2. Quotes to be in Rupees Millions and shall be up to two (2) decimal points.

3. The contents of this format shall be clearly typed.

4. The Financial Bid shall be digitally signed by the authorized signatory in whose name power of attorney as per Clause 2.5.2 is issued.

5. Ensure only one value for annual Transmission Charges is quoted. The same charge shall be payable every year to TSP for the term of TSA.

ANNEXURE 22 – FORMAT FOR AFFIDAVIT

[On non-judicial stamp paper. Foreign companies submitting bids are required to follow the applicable law in their country]

AFFIDAVIT

We [including any of our Affiliate and Consortium Member & any of its Affiliate], hereby declare that as on Bid Deadline:

a. the Bidder & any of its Affiliate including any Consortium Member & any of its Affiliate, their directors or key personnel have not been barred or included in the blacklist by any government agency or authority in India, the government of the jurisdiction of the Bidder or Members where they are incorporated or the jurisdiction of their principal place of business, any international financial institution such as the World Bank Group, Asian Development Bank, African Development Bank, Inter-American Development Bank, Asian Infrastructure Investment Bank etc. or the United Nations or any of its agencies; or

b. the Bidder & any of its Affiliate including any Consortium Member & any of its Affiliate or their directors have not been convicted of any offence in India or abroad.

We further declare that following investigations are pending / no investigation is pending [strike off whichever is not applicable] against us [including any of our Consortium Member or Affiliate or Parent or Ultimate Parent or Affiliate] or CEO or any of our directors/ manager/key managerial personnel of the Applicant /Consortium Member or their Affiliates.

We further undertake to inform the BPC of any such matter as mentioned above on its occurrence after the date of this affidavit till the Effective Date.

We undertake that, in case, any information provided in relation to this affidavit is found incorrect at any time hereafter, our BID / Letter of Intent / contract (if entered) would stand rejected / recalled / terminated, as the case may be.

…….
Signature and Name of the authorized signatory of the Company Bidding Company / Lead Member of the Bidding Consortium

……..
(Signature of Notary Public)

Place: ……
Date: ……

Note: In case any investigation is pending against the Applicant, including any Consortium Member or Affiliate, or CEO or any of the directors/ manager/key managerial personnel of the

Applicant /Consortium /Member or their Affiliates, full details of such investigation including the name of the investigating agency, the charge/offence for which the investigation has been launched, name and designation of persons against whom the investigation has been launched and other relevant information should be disclosed under this affidavit.

ANNEXURE A

Technical Details with respect to electronic bidding

Registration Methodology

To participate in the e-bidding process for selection of the Transmission Service Provider, interested bidders are required to register on the e-procurement portal of MSTC Limited at https://www.mstcecommerce.com/eprocn/.
For registration, the bidder must complete the online form available under the "Register as Vendor" link on the portal and submit the duly filled form by clicking on the "Submit" button.

During the registration process, the bidder shall create a user ID and password and retain the same for future use. The bidder shall ensure that the confidentiality of the user ID and password is maintained at all times and shall be solely responsible for any misuse thereof. The mobile number and email address provided by the bidder shall be verified through OTP authentication.

Bidders are required to possess a Digital Signature Certificate (DSC) with both signing and encryption capabilities, which must be mapped to their login credentials upon successful completion of the registration process at the time of first login.

The bidders are advised to verify all details entered in the registration form before final submission. Upon successful submission of the online registration form, a confirmation email will be sent to the bidder's registered email address, confirming successful registration. The email will also contain the bidder's unique reference number along with the registration details.

Contact Person at MSTC Limited:

Mrs. Rupali Pandey, 9458704037

On completion of the above stated registration process, a bidder shall be able to login to MSTC's website.

ANNEXURE B

Draft Pre-Award Integrity Pact

GENERAL

This pre-bid contract Agreement (herein after called the Integrity Pact) is made on …….. day of the month of ……. 20……, between, on one hand, ……. [Insert name of BPC] through Shri … .....[Insert Name & designation of representative of BPC] (hereinafter called the "Bid Process Coordinator/ BPC", which expression shall mean and include, unless the context otherwise requires, his successors in the office and assigns) of the First Part and M/s …… represented by Shri …….. [Insert Name & Designation of Authorized Signatory of the Bidder/ Lead Member of Consortium] (hereinafter called the "Bidder" which expression shall mean and include, unless the context otherwise requires, his successors and permitted assigns) of the Second Part.

WHEREAS the BPC is conducting the bidding process for selection of bidder as Transmission Service Provider (TSP) for **"Common Transmission System for evacuation of power from Lakadia (Phase-II: 7.5GW), Jam Khambhaliya (Phase-II: 5.5GW) and Jamnagar (Phase-I: 1GW) - Part-B"** who will be responsible to set up the transmission project on build, own, operate and transfer (BOOT) basis and to provide Transmission Service.

WHEREAS the Bidder is a Private Company/Public Company/Government Undertaking/ Partnership, constituted in accordance with the relevant law in the matter and the BPC is a Public Sector Undertaking (PSU) performing its function on behalf of the Ministry of Power, Government of India.

NOW, THEREFORE,

To avoid all forms of corruption by following a system that is fair, transparent and free from any influence/prejudiced dealings during the complete bidding process with a view to:-

Enabling the BPC to select the bidder as TSP in conformity with the defined procedures by avoiding the high cost and the distortionary impact of corruption on public procurement, and

Enabling Bidder to abstain from bribing or indulging in any corrupt practice in order to emerge as selected bidder by providing assurance to them that their competitors will also abstain from bribing and other practices and the BPC will commit to prevent corruption, in any form, by its officials by following transparent procedures.

The parties hereto hereby agree to enter into this Integrity Pact and agree as follows:

Commitments of BPC

1.1 The BPC undertakes that no official of the BPC, connected directly or indirectly with the bidding process, will demand, take a promise for or accept, directly or through intermediaries, any bribe, consideration, gift, reward, favour or any material or immaterial benefit or any other advantage from the BIDDER, either for themselves or for any person, organization or third party related to the bidding process in exchange for an advantage in the bidding process, bid evaluation, contracting or implementation process related to the contract.

1.2 The BPC will, during the bidding stage, treat all bidders alike, and will provide to all bidders the same information and will not provide any such information to any particular bidder which could afford an advantage to that particular bidder in comparison to the other bidders.

1.3 All the officials of the BPC will report the appropriate Government office any attempted or completed breaches of the above commitments as well as any substantial suspicion of such a breach.

2. In case of any such preceding misconduct on the part of such official(s) is reported by the Bidder to the BPC with the full and verifiable facts and the same is *prima facie* found to be correct by the BPC, necessary disciplinary proceedings, or any other action as deemed fit, including criminal proceedings may be initiated by the BPC and such a person shall be debarred from further dealings related to the bidding process. In such a case while an enquiry is being conducted by the BPC the proceedings under the bidding process would not be stalled.

Commitments of Bidder

3. The Bidder commits itself to take all measures necessary to prevent corrupt practices, unfair means and illegal activities during any stage of its bid or during any pre award stage in order to emerge as Selected Bidder or in furtherance to secure it and in particular commits itself to the following: -

3.1 The Bidder will not offer, directly or through intermediaries, any bribe, gift, consideration, reward, favour, any material or immaterial benefit or other advantage, commission, fees, brokerage or inducement to any official of the BPC, connected directly or indirectly with the bidding process, or to any person, organization or third party related to the bidding process in exchange for any advantage in the bidding, evaluation, contracting and implementation of the bidding process.

3.2 The Bidder further undertakes that it has not given, offered or promised to give,

directly or indirectly any bribe, gift, consideration, reward, favour, any material or immaterial benefit or other advantage, commission, fees, brokerage or inducement to any official of the BPC or otherwise in bidding process or for bearing to do or having done any act in relation to bidding process or any other contract with the Government for showing or forbearing to show favour or disfavour to any person in relation to the bidding process or any other contract with the Government.

3.3 The Bidder shall disclose the name and address of agents and representatives and Indian Bidder shall disclose their foreign principals or associates.

3.4 The Bidder shall disclose the payments to be made by them to agents/brokers or any other intermediary, in connection with this bid.

3.5 The Bidder further confirms and declares to the BPC that the Bidder has not engaged any individual or firm or company whether Indian or foreign to intercede, facilitate or in any way to recommend to the BPC or any of its functionaries, whether officially or unofficially for selection of Bidder as TSP, nor has any amount been paid, promised or intended to be paid to any such individual, firm or company in respect of any such intercession, facilitation or recommendation.

3.6 The Bidder, either while presenting the bid or during pre-award negotiations or before signing the Share Purchase Agreement, shall disclose any payments he has made, is committed to or intends to make to officials of the BPC or their family members, agents, brokers or any other intermediaries in connection with the bidding process and the details of services agreed upon for such payments.

3.7 The Bidder will not collude with other parties interested in the bidding process to impair the transparency, fairness and progress of the bidding process.

3.8 The Bidder will not accept any advantage in exchange for any corrupt practice, unfair means and illegal activities.

3.9 The Bidder shall not use improperly, for purpose of competition or personal gain, or pass on to others, any information provided by the BPC as part of the business relationship, regarding plans, technical proposal and business details, including information contained in any electronic data carrier. The Bidder also undertakes to exercise due and adequate care lest any such information is divulged.

3.10 The Bidder commits to refrain from giving any complaint directly or through any other manner without supporting it with full and verifiable facts.

3.11 The Bidder shall not instigate or cause to instigate any third person to commit any of the actions mentioned above.

3.12 The Bidder shall not lend to or borrow any money from or enter into any monetary dealings or transactions, directly or indirectly, with any employee of the BPC.

4. Previous Transgression

4.1 The Bidder declares that no previous transgression occurred in the last three years immediately before signing of this Integrity Pact, with any other company in any country in respect of any corrupt practices envisaged hereunder or with any Public Sector Enterprise in India or any Government Department in India that could justify Bidder's exclusion from the bidding process.

4.2 The Bidder agrees that if it makes incorrect statement on this subject, Bidder can be disqualified from the tender process or the contract, if already awarded, can be terminated for such reason.

5. Bid Bond (Security Deposit)

5.1 Along with the technical bid, the Bidder shall submit Bid Bond for an amount of Rs. ……. (as per the amount specified in Request for Proposal (RFP) Document) issued by.....[Insert Name of the Banks from the list provided in RFP Document] as Earnest Money/Security Deposit, with the BPC.

5.2 The Earnest Money/Security Deposit shall be valid & retained by the BPC for such period as specified in the RFP Document.

5.3 No interest shall be payable by the BPC to the Bidder on Earnest Money/Security Deposit for the period of its currency.

6. Sanctions for Violations

6.1 Any breach of the aforesaid provisions by the Bidder or any one employed by it or acting on its behalf (whether with or without the knowledge of the Bidder) shall entitle the BPC to take all or anyone of the following actions, wherever required: -

(i) To immediately call off the pre-award negotiations without assigning any reason or giving any compensation to the Bidder. However, the proceedings with the other Bidder (s) would continue.

(ii) The Bid Bond (in pre-award stage) shall stand forfeited either fully or partially, as decided by the BPC and the BPC shall not be required to assign any reason therefore.

(iii) To immediately cancel the award, if already awarded, without giving any compensation to the Bidder.

(iv) To cancel all or any other contracts with the Bidder. The Bidder shall be liable to pay compensation for any loss or damage to the BPC resulting from such cancellation/rescission.-

(v) To debar the Bidder from participation in any tender or RFP issued by any BPC for an indefinite period.

(vi) To recover all sums paid in violation of this Pact by Bidder to any middleman or agent or broker with a view to securing the award.

6.2 The BPC will be entitled to take all or any of the actions mentioned at para 6.1 (i) to (vi) of this Pact also on the Commission by the Bidder or anyone employed by it or acting on its behalf (whether with or without the knowledge of the Bidder), of an offence as defined in Chapter IX of the Indian Penal code, 1860 or Prevention of Corruption Act, 1988 or any other statute enacted for prevention of corruption.

6.3 The decision of the BPC to the effect that a breach of the provisions of this Pact has been committed by the Bidder shall be final and conclusive on the Bidder. However, the Bidder can approach the Independent Monitor(s) appointed for the purposes of this Pact.

7. Independent Monitors

7.1 The BPC has appointed Independent Monitors (hereinafter referred to as Monitors) for this Pact in consultation with the Central Vigilance Commission (Names and Addresses of the Monitors to be given).

7.2 The task of the Monitors shall be to review independently and objectively, whether and to what extent the parties comply with the obligations under this Pact.

7.3 The Monitors shall not be subject to instructions by the representatives of the parties and perform their functions neutrally and independently.

7.4 Both the parties accept that the Monitors have the right to access all the documents relating to the project/procurement, including minutes of meetings.

7.5 As soon as the Monitor notices, or has reason to believe, a violation of this Pact, he will so inform the Authority designated by the BPC.

7.6 The Bidder accepts that the Monitors has the right to access without restriction to all

Project documentation of the BPC including that provided by the Bidder. The Monitor shall be under contractual obligation to treat the information and documents of the Bidder /Subcontractors(s) with confidentially. [As all the bid documents are with BPC only]

7.7 The BPC will provide to the Monitors sufficient information about all meetings among the parties related to the Project provided such meetings could have an impact on the contractual relations between the parties. The parties will offer to the monitor the option to participate in such meetings.

7.8 The Monitor will submit a written report to the designated Authority of the BPC/Secretary in the Department within 8 to 10 weeks from the date of reference or intimation to him by the BPC / Bidder and, should the occasion arise, submit proposals for correcting problematic situations.

8. Facilitation of Investigation

In case of any allegation of violation of any provisions of this Pact or payment of commission, the BPC or its agencies shall be entitled to examine all the documents including the Books of Accounts of the Bidder and the Bidder shall provide necessary information and documents in English and shall extend all possible help for the purpose of such examination.

9. Law and Place of Jurisdiction

This Pact is subject to Indian Law. The place of performance and jurisdiction is the seat of the BPC.

10. Other Legal Actions

The actions stipulated in this Integrity Pact are without prejudice to any other legal action that may follow in accordance with the provisions of the any extent law in force relating to any civil or criminal proceedings.

11. Validity

11.1 The validity of this Integrity Pact shall be from date of its signing and upto 6 months from the date of transfer of project specific SPV i.e. signing of Share Purchase Agreement with BPC. In case Bidder is unsuccessful, this Integrity Pact shall expire after 15 days from the date of transfer of project specific SPV to successful bidder.

11.2 Should one or several provisions of this Pact turn out to be invalid, the remainder of this Pact shall remain valid. In this case, the parties will strive to come to an agreement to their original intentions.

12. The Parties hereby sign this Integrity Pact at on

Bid Process Coordinator (BPC)	BIDDER
Name of the Officer Designation Name of the BPC with address Witness: 1._____ 2. _____	Name of Whole time Director/Authorized Signatory Name of the Bidder with address Witness: 1._____ 2. _____

ANNEXURE C

Technical Specifications of Transmission System

SPECIFIC TECHNICAL REQUIREMENTS FOR TRANSMISSION LINE

The design, routing and construction of transmission lines shall be in accordance with Chapter V, Part A of CEA (Technical Standards for Construction of Electrical Plants and Electric Lines) Regulations 2022, as amended from time to time. Other CEA Regulations/ guidelines as amended up to date and Ministry of Power (MoP) guidelines, as applicable, shall also be followed.

A.1.0 Selection of tower type shall be made as per CEA Regulations, however, in case lattice type towers are used, the following shall also be applicable:

A.2.0 Steel section of grade E 250 and/or grade E 350 as per IS 2062, only are permitted for use in towers, extensions, gantry structures and stub setting templates. For towers in snowbound areas, steel sections shall conform to Grade-C of IS-2062.

A.3.0 Towers shall be designed as per IS-802:2015, however the drag coefficient of the tower shall be as follows: -

Solidity Ratio	Drag Coefficient
Up to 0.05	3.6
0.1	3.4
0.2	2.9
0.3	2.5
0.4	2.2
0.5 and above	2.0

A.4.0 Transmission Service Provider (TSP) shall adopt any additional loading/ design criteria for ensuring reliability of the line, if so desired and /or deemed necessary.

A.5.0 Transmission line shall be designed considering wind zones as specified in wind map given in National Building Code 2016, Vol.1. The developer shall also make his own assessment of local wind conditions and frequent occurrences of High Intensity Winds (HIW) due to thunderstorms, dust storms, downburst etc. along the line route and wherever required, higher wind zone than that given in wind map shall be considered for tower design for ensuring reliability of line. Further, for transmission line sections passing within a distance of 50 km from the boundary of two wind zones, higher of the two wind zones shall be considered for design of towers located in such sections.

A.6.0 Selection of reliability level for design of tower shall be as per CEA Regulation (Technical Standards for Construction of Electrical Plants and Electric Lines) Regulations 2022, as amended from time to time.

A.7.0

a) In case of construction of transmission line of Voltage level 400 kV and above, under crossing of the existing transmission line shall not be allowed. In the case where it is inevitable to under-cross the existing transmission line then TSP shall seek prior approval from Chief Electrical Inspector, CEA with detailed study ensuring that all statutory electrical clearances and Electric Field limit of 10 kV/m at 1 m and 1.8 m from ground level is not violated.

b) For power line crossing of 400 kV or above voltage level, large angle and dead end towers (i.e. D/DD/QD) shall be used on either side of power line crossing.

c) For power line crossing of 132 kV and 220 kV (or 230 kV) voltage level, angle towers (B/C/D/DB/DC/DD/ QB/QC/QD) shall be used on either side of power line crossing depending upon the merit of the prevailing site condition and line deviation requirement.

d) For power line crossing of 66 kV and below voltage level, suspension/tension towers shall be provided on either side of power line crossing depending upon the merit of the prevailing site condition and line deviation requirement.

e) For crossing of railway tracks, national highways and state highways, the rules/ regulations of appropriate authorities shall be followed.

A.8.0 The relevant conductor configuration shall be as follows: -

A. For South Olpad (GIS) – Nasik 765kV D/C line

Type of conductor: ACSR / AAAC / AL59

Basic Parameters:

Transmission line	**ACSR Conductor specified**	**Equivalent AAAC conductor based on 53.5% conductivity of Al Alloy**	**Equivalent minimum size of AL59 conductor based on 59% conductivity of AL Alloy***	**Sub-conductor Spacing**
765 kV D/C (Hexa Bundle) Transmission Lines	**Zebra : Stranding** 54/3.18 mm-Al + 7/3.18 mm-Steel, 428.9 mm^2, Aluminium area, 28.62 mm diameter Maximum DC	**Stranding details:** 61/3.19 mm, 487.5 mm^2 Aluminium alloy area 28.71 mm diameter Maximum DC	**Stranding details:** 61/3.08 mm, 454 mm^2 Aluminium alloy area 27.72 mm diameter Maximum DC	457 mm

Transmission line	ACSR Conductor specified	Equivalent AAAC conductor based on 53.5% conductivity of Al Alloy	Equivalent minimum size of AL59 conductor based on 59% conductivity of AL Alloy*	Sub-conductor Spacing
	Resistance at 20°C (Ω/km): 0.0677 Minimum UTS: 131.44 kN	Resistance at 20°C (Ω/km): 0.06815 Minimum UTS: 135.6 kN	Resistance at 20°C (Ω/km): 0.0653 Minimum UTS: 108 kN	

B. For Nasik – Pimpalgaon (MSETCL) 400kV D/C line

Type of conductor: ACSR / AAAC / AL59

Basic Parameters:

Transmission line	ACSR Conductor specified	Equivalent AAAC conductor based on 53%conductivity of Al Alloy	Equivalent minimum size of AL59 conductor based on 59% conductivity of AL Alloy*	Sub-conductor Spacing
400 kV D/C (Quad Bundle) Transmission Lines	**Moose: Stranding** 54/3.53mm-Al + 7/3.53 mm- Steel, 31.77 mm diameter 528.5 mm^2, Aluminium area, Maximum DC Resistance at 20°C (Ω/km): 0.0549 Minimum UTS: 159.60 kN	**Stranding details:** 61/3.55mm 31.95mm diameter; 604 mm^2 Aluminium alloy area Maximum DC Resistance at 20°C (Ω/km): 0.05506 Minimum UTS: 159.80 kN	**Stranding details:** 61/3.31mm 29.79 mm diameter; 525 mm^2 Aluminium alloy area Maximum DC Resistance at 20°C (Ω/km): 0.0566 Minimum UTS: 124.70 kN	457 mm

Note:

1. **To select any size above the minimum, the sizes mentioned in the Indian standard IS-398 (part-6) shall be followed.*
2. *The transmission lines shall have to be designed for a maximum operating conductor temperature of 85 ^{O}C.*

A.9.0 The required phase to phase spacing and horizontal spacing for 765 kV and 400 kV line(s) shall be governed by the tower design as well as minimum live metal clearances for 765 kV and 400 kV voltage level under different insulator swing angles. However, the phase to phase spacing for 765 kV line shall not be less than 15 m and for 400 kV line shall not be less than 8 m.

A.10.0 All electrical clearances including minimum live metal clearance, ground clearance and minimum mid span separation between earth wire and conductor as given below shall be considered:

I. Minimum live metal clearances for 765 kV line:

a) (i) Under stationary conditions

From tower body: For 765 kV D/C: 6.1 m

For 765 kV S/C: 5.6 m

(ii) Under swing conditions

Wind Pressure Condition	Minimum Electrical Clearance
a) Swing angle (25º)	4.4 m
b) Swing angle (55º)	1.3 m

(iii) Minimum ground clearance for 765 kV line: 18 m

(iv) Minimum mid span separation between earth-wire and conductor for 765 kV line: 9.0 m

II. Minimum live metal clearances for 400 kV line:

(i) Under stationary conditions

From tower body: 3.05 m

(ii) Under swing conditions

Wind pressure Condition	Minimum electrical clearance
a) Swing angle (22º)	3.05 m
b) Swing angle (44º)	1.86 m

(iii) Minimum ground clearance for 400 kV line: 8.84 m

(iv) Minimum mid span separation between earth-wire and conductor for 400 kV line: 9.0 m

A.11.0 The Shielding angle shall not exceed 10 deg for 765 kV D/C and 20 deg for 400 kV D/C Line transmission line.

A.12.0 The Fault current for design of line shall be 50 kA for 1 sec for 765 kV and 63 kA for 1 sec for 400 kV.

A.13.0 In case of 400 kV and above voltage class lines, at least one out of two earth wires shall be OPGW and second earth wire, if not OPGW, shall be either of Galvanized Stranded Steel (GSS) or Aluminum Alloy Conductor Steel Reinforced (AACSR) conductor type or any other suitable conductor type depending upon span length and other technical consideration.

A.14.0 Each tower shall be earthed such that tower footing impedance does not exceed 10 ohms. Pipe type or Counterpoise type earthing shall be provided in accordance with relevant IS. Additional earthing shall be provided on every 7 to 8 km distance for direct earthing of both shield wires. If site condition demands, multiple earthing or use of earthing enhancement compound shall be used.

A.15.0 Pile type foundation shall be used for towers located in river or creek bed or on bank of river having scourable strata or in areas where river flow or change in river course is anticipated, based on detailed soil investigation and previous years' maximum flood discharge of the river, maximum velocity of water, highest flood level, scour depth and anticipated change in course of river based on river morphology data of at least past 20 years to ensure availability and reliability of the transmission line.

A.16.0 Transmission line route shall be finalized, in consultation with appropriate authorities so as to avoid the habitant zones of endangered species and other protected species. Bird diverters, wherever required, shall be provided on the transmission line. In order to optimize the route, use of GATISHAKTI platform shall also be made.

A.17.0 Wherever, transmission lines are passing through cyclone prone areas i.e., areas up to 60 km from coast following shall also be applicable:

a) Terrain category-I, with terrain roughness factor (K2) of 1.08 shall be considered for tower design for exposed open terrain with few or no obstruction, which also includes open sea coasts, open stretch of water, desert and flat treeless plains.

b) Importance factor for cyclonic region (K4) of 1.3 shall be considered for tower design.

c) The number of consecutive spans between the section points/ angle point shall not exceed 10 spans or 3 km instead of conventional practice of 15 spans or 5 km, in order to reduce the failure of such towers in coastal areas due to cascading effect. The section shall be terminated with tension tower/ angle tower and angle of deviation should be based on the site requirement.

A.18.0 Wherever, transmission lines are passing through cyclone prone areas (i.e. areas up to 60 km from coast)/ creek regions/ aggressive soil areas following shall also be applicable:

a) The fabricated tower parts and stubs shall have a minimum overall zinc coating of 900 g/m^2 of surface area except for plates and sections below 5 mm which shall have a minimum overall zinc coating of 610 g/m^2 of surface area. The average zinc coating for all sections and plates 5 mm and above shall be maintained as 127 microns and that for plates and sections below 5 mm shall be maintained as 87 microns.

b) Ready mix concrete of M30 Grade shall be used to avoid use of locally available saline water. However, design mix concrete of M30 Grade conforming to IS 456 with potable water can be used at locations where transportation of ready-mix concrete is not feasible. Minimum cement content in any case shall not be less than 330 kg/m^3.

c) The surface of the reinforced steel shall be treated with epoxy-based coating to enhance corrosion performance of foundation. Use of epoxy coated reinforcement in foundation shall be as per IS 13620. In addition, two (2) coats of bituminous painting of minimum 1.6 kg/m^2 per coat shall be applied on all exposed faces of foundation (i.e. pedestal and base slab).

d) Double coat 20 mm thick cement plaster shall be provided on all exposed concrete surface as well up to 300 mm below ground level to give protection to concrete surface from environmental and saline effect.

e) Before coping of chimney top portion, three coats of anti-corrosive paint of minimum 30-35 microns dry film thickness each shall be applied on the stub in the 50 mm coping portion as well as up to 350 mm above CL portion.

A.19.0 The raised chimney foundation is to be provided in areas prone to flooding/water stagnation like paddy field /agricultural field and undulated areas to avoid direct contact of water with steel part of tower. The top of the chimney of foundation should be at least above High Flood Level (HFL) or the historical water stagnation/ logging level (based on locally available data) or above High Tide Level or 500 mm above Natural Ground level (whichever is higher).

A.20.0 Routing of transmission line through protected areas of India shall be avoided to the extent possible. In case, it is not possible to avoid protected areas, the towers of the transmission line up to 400 kV level, which are installed in protected areas shall be designed for Multicircuit (4 circuits) configuration of same voltage level considering reliability level of at least two (2). The top two circuits of these multi-circuit towers shall be used for stringing of the transmission line under present scope and the bottom two circuits shall be made available for stringing of any future transmission line of any transmission service providers/ State transmission utilities/Central transmission utilities passing through the same protected area. Further, the configuration and coordinates of such transmission towers shall be submitted to CEA, CTU and BPC by the TSP.

A.21.0 The TSP shall abide by the Guidelines of CEA w.r.t. shifting of transmission lines for NHAI projects and other projects.

A.22.0 Safety precautions in regards to gas/oil pipelines in vicinity of Transmission lines shall be taken in coordination with gas/ petroleum authorities.

A.23.0 The stringing of the transmission line in forest area shall be carried out through drones.

A.24.0 The tower shall be designed considering the porcelain Insulators with creepage factor of 31 mm/ kV irrespective of type of insulator used.

A.25.0 RoW width and Span in different terrain shall be as per Schedule VII of CEA (Technical Standards for Construction of Electrical plants and Electric Lines) Regulations 2022, as amended from time to time.

SPECIFIC TECHNICAL REQUIREMENTS FOR SUBSTATION

The proposed **Nasik S/s** shall be conventional Air Insulated Substation (AIS) type conforming to the requirements of CEA (Technical Standards for Construction of Electrical Plants and Electric Lines) Regulations, 2022, as amended from time to time.

Extension of proposed **South Olpad S/s** shall be conventional Gas Insulated Substation (GIS) type conforming to the requirements of CEA (Technical Standards for Construction of Electrical Plants and Electric Lines) Regulations 2022, as amended from time to time.

Extension of proposed **Pimpalgaon S/s** shall be conventional Air Insulated Substation (AIS) type conforming to the requirements of CEA (Technical Standards for Construction of Electrical Plants and Electric Lines) Regulations 2022, as amended from time to time.

Other CEA Regulations/guidelines as amended up to date and Minstry of Power (MoP) guidelines, as applicable, shall also be followed.

B.1.0 Salient features of Substation Equipment and Facilities

The design and specification of substation equipment are to be governed by the following factors:

B.1.1 Insulation Coordination

The system design parameters for substations/switchyards shall be as given below:

Sl. No.	**Description of parameters**	**765/400/220 kV Nasik (AIS)**		
		765 kV System	**400 kV System**	**220 kV System**
1.	System Operating Voltage	765 kV	400 kV	220 kV
2.	Maximum voltage of the system (rms)	800 kV	420 kV	245 kV
3.	Rated Frequency	50 Hz	50 Hz	50 Hz
4.	No. of Phases	3	3	3
5.	Rated Insulation Levels			
i)	Lightning Impulse withstand voltage for (1.2/50 micro sec.) - for Equipment other than Transformer and Reactor - for Insulator String	 2100 kVp 2100 kVp	 1425 kVp 1550 kVp	 1050 kVp 1050 kVp
ii)	Switching Impulse withstand voltage (250/2500 micro sec.) dry and wet	1550 kVp	1050 kVp	--
iii)	One minute power frequency dry withstand voltage (rms)	830 kV	630 kV	--

Sl. No.	Description of parameters	765/400/220 kV Nasik (AIS)		
		765 kV System	**400 kV System**	**220 kV System**
iv)	One minute power frequency dry and wet withstand voltage (rms)	--	--	460 kV
6.	Corona Extinction Voltage	508 kV	320 kV	--
7.	Max. radio interference voltage for frequency between 0.5 MHz and 2 MHz	2500 micro-volts at 508 kV rms	1000 micro-volts at 266 kV rms	1000 micro-volts at 156 kV rms
8.	Minimum creepage distance for insulator string/ longrod insulators/ outdoor bushings	24800 mm (31 mm/kV)	13020 mm (31 mm/kV)	7595 mm (31 mm/kV)
9.	Minimum creepage distance for switchyard equipment	20000 mm (25 mm/kV)	10500 mm (25 mm/kV)	6125 mm (25mm/kV)
10.	Max. Fault Current	50 kA	63 kA	50 kA
11.	Duration of Fault	1 sec	1 sec	1 sec

Sl. No.	Description of parameters	765 kV South Olpad S/s (GIS)	400 kV Pimpalgaon S/s (AIS)
		765 kV System	**400 kV System**
1.	System Operating Voltage	765 kV	400 kV
2.	Maximum voltage of the system (rms)	800 kV	420 kV
3.	Rated Frequency	50 Hz	50 Hz
4.	No. of Phases	3	3
5.	Rated Insulation Levels		
i)	Lightning Impulse withstand voltage for (1.2/50 micro sec.) - for Equipment other than Transformer and Reactor - for Insulator String	 2100 kVp 2100 kVp	 1425 kVp 1550 kVp
ii)	Switching Impulse withstand voltage	1425 kVp	1050 kVp

Sl. No.	Description of parameters	765 kV South Olpad S/s (GIS)	400 kV Pimpalgaon S/s (AIS)
		765 kV System	**400 kV System**
	(250/2500 micro sec.) dry and wet	(for GIS) 1550 kVp (for AIS)	
iii)	One minute power frequency dry withstand voltage (rms)	960 kV (for GIS) 830 kV (for AIS)	630 kV
iv)	One minute power frequency dry and wet withstand voltage (rms)	--	--
6.	Corona Extinction Voltage	508 kV	320 kV
7.	Max. radio interference voltage for frequency between 0.5 MHz and 2 MHz	2500 micro-volts at 508 kV rms	1000 micro-volts at 266 kV rms
8.	Minimum creepage distance for insulator string/ longrod insulators/ outdoor bushings	24800 mm (31 mm/kV)	13020 mm (31 mm/kV)
9.	Minimum creepage distance for switchyard equipment	24800 mm (31 mm/kV)	10500 mm (25 mm/kV)
10.	Max. Fault Current	50 kA	63 kA
11.	Duration of Fault	1 sec	1 sec

B.1.2 Switching Scheme

The switching schemes, as mentioned below, shall be adopted at various voltage levels of substation/switchyard:

Substation	765 kV side	400 kV side	220 kV side
765/400/220 kV Nasik (AIS)	One and Half breaker	One and Half breaker	Double Main and Transfer
765 kV South Olpad S/s (GIS)	One and Half breaker	------	-----
400 kV Pimpalgaon S/s (AIS)	------	As per existing	-----

Notes: -

i) For one and half breaker switching scheme, any double circuit line consisting of two numbers of feeders and originating from the same transmission or generating switchyard shall not be terminated in one diameter.

ii) Two transformers of same HV rating shall not be connected in the same diameter and similarly two bus reactors of same HV rating shall also not be connected in the same diameter.

iii) A diameter in one and half breaker scheme is a set of 3 circuit breakers with associated isolators, earth switches, current transformers etc. for controlling 2 (two) numbers of feeders.

iv) In case of GIS substation where the bus scheme is One and Half breaker scheme, the diameters shall be complete with feeder/line side isolator and GIS duct of the future bay shall be brought outside the GIS hall/building with extension/interface module suitably.

v) Connection arrangement of Switchable Line reactors shall be such that it can be used as Line reactor as well as Bus reactor with suitable NGR bypass arrangement. Further, Spare 1-phase Shunt Reactor unit shall be placed and connected in such a way that the spare unit can be utilized for all the bus and switchable line reactor banks (including future reactor banks) without its physical movement.

vi) Space for 765 kV and 400 kV future line bays shall be kept considering provision of switchable line reactors.

vii) **Space/Provision for Bus sectionalizer:**

(a) One (1) set of bus sectionalizer for 765 kV shall comprise Two (2) Nos. of bus sectionalizer bays with associated Circuit Breakers, Isolators and Current Transformers for both buses

(b) One (1) set of bus sectionalizer for 400 kV shall comprise Two (2) Nos. of bus sectionalizer bays with associated Circuit Breakers, Isolators and Current Transformers for both buses.

(c) One (1) set of bus sectionalizer for 220 kV shall comprise Two (2) Nos. of bus sectionalizer bays with associated Circuit Breakers, Isolators and Current Transformers for both buses.

viii) TSP shall plan connectivity of line and transformer feeders to bus bar in such a way that all power can be evacuated successfully without crossing thermal limit at any point of bus-bar.

ix) For AIS type substation, TSP shall keep space provisions for future elements such that interconnection arrangement to the corresponding future bays can be done with overhead AIS type connection without any cable/ GIS duct.

x) **765/400/220 kV Nasik S/s:**

a) 765 kV bay configurations (one and half breaker scheme) shall be as follows:

Configuration	Number of diameters
Bus Reactor- Tie- Line	2 (two)
ICT-Tie- Future*	3 (three)

Note (*): Space for 2 numbers of 765 kV bays shall be utilized for termination of Nasik – Alephata 765 kV D/c line being constructed under transmission scheme "Common Transmission System for evacuation of power from Lakadia (Phase-II: 7.5GW), Jam Khambhaliya (Phase-II: 5.5GW) and Jamnagar (Phase-I: 1GW): PART-C".

b) 400 kV bay configurations (One and Half Breaker scheme) shall be as follows:

Configuration	Number of diameters
ICT (400 kV side of 765/400 kV ICT)- Tie- ICT	3 (three)
Line-Tie- Bus Reactor	2 (two)

c) Provision of 765 kV Bus Sectionalization shall be with the following feeder distribution.

765 kV Bus Section-1	765 kV Bus Section-2 (Future)
a) 3 Nos. of Present 765/400 kV ICT ***b)* 2 Nos. of Present 765 kV Lines** **c) 2 Nos. of Present 765 kV Bus Reactor** *d) 4 Nos. of Future 765 kV Lines*	*a) 3 Nos. of Future 765/400 kV ICT* *b) 6 Nos. of Future 765 kV Lines* *c) 2 Nos. of Future 765 kV Bus Reactor*

d) Provision of 400 kV Bus Sectionalization shall be with the following feeder distribution.

400 kV Bus Section-1	*400 kV Bus Section-2 (Future)*
a) 3 Nos. of Present 765/400 kV ICT **b) 3 Nos. of Present 400/220 kV ICT** **c) 2 Nos. of Present 400 kV Line** **d) 2 Nos. of Present 420 kV Bus Reactor** *e) 2 Nos. of Future 400/220 kV ICT* *f) 4 Nos. of Future 400 kV Lines*	*a) 3 Nos. of Future 765/400 kV ICT* *b) 5 Nos. of Future 400/220 kV ICT* *c) 2 Nos. of Future 420 kV Bus Reactor* *d) 6 Nos. of Future 400 kV Lines*

e) Provision of 220 kV Bus Sectionalization shall be with the following feeder distribution.

220 kV Bus Section-1	*220 kV Bus Section-2 (Future)*
a) 3 Nos. of Present 400/220 kV ICT **b) 6 Nos. of Present 220 kV Lines** c) *2 Nos. of Future 400/220 kV ICT* d) *2 Nos. of Future 220 kV Line.*	*a) 5 Nos. of Future 400/220 kV ICT* *b) 8 Nos. Future 220 kV Line.*

220 kV Line bays shall be complete along with line side equipment (such as LA, CVT, Wave Trap), gantry, protection panel etc. for termination of 220 kV lines for interconnection of RE Generation Projects.

xi) **765 kV South Olpad S/s**:-

Refer attached SLD Drawing No. 508SLP-KEC-GIS-E-DW-4000 Rev. No. R6. For termination of South Olpad (GIS) – Nasik 765 kV D/C line, TSP shall construct two Nos.

diameters (721-722-723 and 724-725-726) in Section-II with following bay configuration alongwith the 765kV Bus sectionalizer.

Configuration	Number of diameters
Line -Tie- Line* (Future)	2 (Two)

Note (*): GIS modules for Line bays shall be provided by TSP under present scope for diameter completion with provision of Switchable Line Reactor in future.

xii) **400 kV Pimpalgaon S/s:**

Refer attached SLD Drawing No. PSLD/PRJ30/PG/001 Rev. No. R0 for termination of 2 Nos. 400 kV line bays at Pimpalgaon S/s for Nasik – Pimpalgaon (MSETCL) 400 kV D/C line.

xiii) In one and half breaker scheme, both main bay and tie bay shall be completed for controlling a feeder. Further, all associated interconnection work shall also be in the present scope of TSP.

B.2.0 Substation Equipment and Facilities (Voltage level as applicable):

The switchgear shall be designed and specified to withstand operating conditions and duty requirements. All equipment shall be designed considering the following capacity.

Sl. No	Description of Bay	765/400/220 kV Nasik S/s			765 kV South Olpad S/s	400 kV Pimpalgaon S/s
		765 kV	400 kV	220 kV	765 kV	400 kV
1.	Bus Bar	4000 A	4000 A	3000 A	4000 A	As per existing
2.	Line bay	3150 A	3150 A	1600 A	3150 A	3150 A
3.	ICT bay	3150 A	3150 A	1600 A	N/A	N/A
4.	Reactor bay	3150 A	3150 A	N/A	3150 A	N/A
5.	Bus Sectionaliser bay	N/A	N/A	N/A	4000 A	N/A
6.	Bus Coupler Bay	N/A	N/A	3000 A	N/A	N/A
7.	Transfer Bus coupler bay	N/A	N/A	1600 A	N/A	N/A

B.2.1 (765/√3)/(400/√3)/33 kV, Single Phase Autotransformer

500 MVA, (765/√3)/ (400/√3)/ 33 kV, 1-phase Autotransformer (including arrangement for 3-phase bank formation of 1500 MVA) shall conform to CEA's "Standard Specifications and Technical Parameters for Transformers and Reactors (66 kV and above Voltage Class)" as amended up to date available on CEA's website.

Spare 1-phase Transformer unit shall be placed and connected in such a way that the spare unit can be utilized to replace in case of fault in any unit of any of the transformer banks (including for future transformer banks) without physically moving it.

B.2.2 400/220/33 kV, 3-phase Autotransformer

500 MVA, 400/220/33 kV, 3-phase autotransformer shall conform to CEA's "Standard Specifications and Technical Parameters for Transformers and Reactors (66 kV and above Voltage Class)" as amended up to date available on CEA's website.

B.2.3 (765/√3) kV, Single Phase Shunt Reactor

80 MVAr and 110 MVAr, 765/√3 kV, 1-Phase Reactor (including arrangement for 3-phase bank formation of 240 MVAr and 330 MVAr respectively) shall conform to CEA's "Standard Specifications and Technical Parameters for Transformers and Reactors (66 kV and above voltage class)" as amended up to date available on CEA's website.

Spare 1-phase Shunt Reactor unit shall be placed and connected in such a way that the spare unit can be utilized for all the bus and **switchable** line reactor banks (including for future reactor banks) without its physical movement.

Connection arrangement for utilization of existing Spare Single Phase Shunt Reactor unit: TSP shall make the arrangement of present Reactor bank in such a way that the existing spare unit can be utilized for Reactor bank under present scope without its physical movement.

Neutral Grounding Reactor and Surge Arrester for 765 kV Switchable Line Reactors (as applicable):

The neutral of the switchable line reactors (wherever provided) shall be grounded through adequately rated Neutral Grounding Reactors (NGR) to facilitate single phase auto-reclosure, provided that the NGR shall be provided with suitable bypass arrangement so that the switchable line reactor can be used as bus reactor as and when required. The neutral of bus reactor shall be solidly grounded.

NGR shall be oil filled or dry type air core for outdoor application. NGR shall conform to CEA's "Standard specifications and technical parameters of transformers and reactors (66 kV and above Voltage Class)", as amended up to date. Technical parameters of NGR shall be as specified in Annexure-A of above-mentioned document.

The Surge Arresters (rated voltage of arrester in co-ordination with ohmic value of NGR shall be decided by the TSP) shall be provided and physically located between the neutral of shunt reactor (brought out at 145 kV class bushing) and neutral grounding reactor. The surge arresters shall be of Station Medium (SM) class duty gapless Metal Oxide (ZnO) type conforming in general to IEC-60099-4. Arresters shall be hermetically sealed units, of self-supporting construction, suitable for mounting on structures.

The Ohmic value of NGR for Line Reactors shall be as follows:

Sl. No.	Line Name	Substation Name	NGR value (Ohm)
1.	765 kV, 240 MVAr Switchable line reactors on each circuit at both ends of South Olpad – Nasik 765 kV D/c line	South Olpad	400
		Nasik	400

B.2.4 420 kV, 3- Phase Shunt Reactor

125 MVAr, 420 kV, 3-Phase Reactor shall conform to CEA's "Standard Specifications and Technical Parameters for Transformers and Reactors (66 kV and above voltage class)" as amended up to date available on CEA website.

B.2.5 765 kV GIS equipment

GIS (Gas Insulated Switchgear) shall be Indoor type in accordance to IEC: 62271-203. The switchgear shall be designed and specified to withstand operating conditions and duty requirements. All the switchgear such as Circuit Breaker, isolator, earth switch including CT, PT etc. shall be GIS type. The Surge Arrestor and Voltage Transformer shall be either GIS or outdoor AIS type.

The GIS assembly shall consist of separate modular compartments e.g. Circuit Breaker compartment, Bus bar compartment filled with SF_6 Gas and separated by gas tight partitions so as to minimize risk to human life, allow ease of maintenance and limit the effects of gas leaks failures and internal arcs etc. These compartments shall be designed to minimize the risk of damage to adjacent sections and protection of personnel in the event of a failure occurring within the compartments. Rupture diaphragms with suitable deflectors shall be provided to prevent uncontrolled bursting pressures developing within the enclosures under worst operating conditions, thus providing controlled pressure relief in the affected compartment. The arrangement of gas sections or compartments shall be such as to facilitate future extension of any make without any drilling, cutting or welding on the existing equipment. To add equipment, it shall not be necessary to move or dislocate the existing switchgear bays. The layout of Gas Insulated Bus Ducts shall be properly planned to optimize the length of bus ducts and for easy accessibility for maintenance. The length of busbars, bus ducts, isolator sections shall be optimized considering effects of fast transient voltage due to isolator operations.

The bus bar modules including auxiliary bus modules (wherever applicable) shall be provided with suitable End Piece (Interface) module **on both sides** with the test link facility for future extension as per provisions of future requirements. The end piece module shall be designed in such a way so that future GIS modules may be tested without extending test voltage to existing bus and vice-versa by removing the test link.

TSP shall make available the complete details for the design of interface module such as cross section, enclosure material, enclosure dimensions (inner and outer), Flange diameter (inner and outer), conductor cross-section and connection arrangement, bolt spacing and dimension, rated gas pressure, Gasket detail etc. Further, adequate space for GIS busbar interface module shall be taken into account for future scope.

Each section shall have plug-in or easily removable connection pieces to allow for easy replacement of any component with the minimum disturbance to the remainder of the equipment. Inspection windows (View Ports) shall be provided for Disconnector Switches and both type of earth switches i.e. Maintenance and fast operating.

Local Control Cabinets (LCC) shall be provided as per requirement. The alarm and annunciation of

GIS equipment shall be wired to the SCADA System.

The material and thickness of the enclosures shall be such as to withstand an internal flashover without burns through for a period of 300 ms at rated short time withstand current. The material shall be such that it has no effect of environment as well as from the by-products of SF_6 breakdown under arcing conditions. This shall be validated with Type Test.

Service continuity requirement for GIS:

The GIS equipment with the given bus switching arrangement shall be divided into different gas compartments. During the work such as a fault repair or major maintenance, requiring the dismantling of a gas compartment for which more than one compartments may need to be de-gassed.

TSP shall meet following Service continuity conditions (to the extent possible) with ensuring equipment and operating personnel's safety:

- For One and half breaker bus switching scheme, during a fault in Circuit Breaker compartment, no bus bar and feeder is permitted out of service during maintenance and repair/replacement.
- During a fault in a GIS compartment other than the Circuit Breaker compartment, maximum of one bus bar and/or one feeder is permitted out of service during maintenance and repair/replacement.

UHF sensors in GIS for PD (Partial Discharge) detection:

The adequate number of Ultra High Frequency (UHF) sensors shall be provided in the offered GIS along with suitable portable type Partial Discharge (PD) measuring instrument for detection of Partial discharge (of 5 pC and above as per IEC 60270). The number and location of these sensors shall be based on laboratory tests on the typical design of GIS as per recommendations of CIGRE Document No. 654 (Application Guide for sensitivity verification for UHF Partial discharge detection system for GIS).

B.2.5.1 Circuit Breakers (GIS)

GIS Circuit breakers shall in general be of C2-M2 class and comply to IEC-62271-100. The rated break time shall not exceed 40 ms (milli second) for 765 kV. Circuit breakers shall be suitable for single phase and three phase auto reclosing. Each breaker would have two sets of trip circuits which would be connected to separate DC supplies for greater reliability. The Circuit breakers controlling 765 kV lines shall be provided with pre-insertion closing resistor of about 450 ohms with 9 ms insertion time or Controlled Switching Device (CSD). The short line fault capacity shall be the same as the rated capacity and this is proposed to be achieved without use of opening resistors. Controlled switching device shall be provided in the Circuit Breaker of the switchable line reactor bay and in Main and Tie bay circuit breakers of line with non-switchable line reactors, Bus reactors and Transformers for 400 kV and above voltage class.

B.2.5.2 Isolators (GIS)

The isolators shall comply to IEC 62271-102 in general. Earth switches shall be provided at various locations to facilitate maintenance. Main blades and earth blades shall be interlocked and interlock shall be fail safe type. All isolators and earth switches shall be motor operated type.

The isolator shall be of extended mechanical endurance class-M2 and suitable for Bus Transfer Current Switching duty as per IEC standards. High speed earthing switches shall be provided for grounding purposes at overhead line terminations and cable terminations and shall have fault making capability as specified. Earth switch for line isolator shall be of earthing switch class E1 and shall be suitable for induced current switching duty as defined for Class-B as per relevant standard.

B.2.5.3 Current Transformers (GIS)

Current Transformers shall comply with IEC 61869 in general. All ratios shall be obtained by secondary taps only. Generally, Current Transformers (CT) shall have five cores (four for protection and one for metering) whereas; CT in Tie bays shall have six cores (four for protections and two for metering) suitably distributed on both sides of CB (for 400 kV and above voltage class). The burden and knee point voltage shall be in accordance with the requirements of the system including possible feeds for telemetry. The accuracy class for protection core shall be PX and for the metering core it shall be 0.2S. The rated burden of cores shall be closer to the maximum burden requirement of metering and protection system (not more than 20 VA for metering core) for better sensitivity and accuracy.

The instrument security factor shall be less than 10 for CTs of 765 kV voltage class.

B.2.5.4 Voltage Transformer (GIS)

The voltage transformers shall conform to IEC-61869. Voltage transformers shall be of electromagnetic type with SF_6 gas insulation. The earth end of the high voltage winding and the ends of the secondary winding shall be brought out in the terminal box. The voltage transformers shall be located as a separate bay module and will be connected phase to ground and shall be used for protection, metering and synchronization. The voltage transformers shall be of inductive type, nonresistant and shall be contained in their own-SF_6 compartment, separated from other parts of installation. The voltage transformer shall be effectively shielded against high frequency electromagnetic transients. The voltage transformer shall have three secondary windings out of which two shall be used for protection and one for metering. The voltage transformer should be thermally and dielectrically safe when the secondary terminals are loaded with the guaranteed thermal burdens. The accuracy class for protection cores shall be 3P. The accuracy of 0.2 on metering core should be maintained throughout the entire burden range on all the three windings without any adjustments during operation. The rated burden of cores shall be closer to the maximum burden requirement of metering and protection system (not more than 50 VA for metering core) for better sensitivity and accuracy.

B.2.5.5 Surge Arresters (GIS) (if applicable)

624 kV Station High (SH) duty gapless type Surge arresters with thermal energy (Wth) of minimum 13 kJ/kV shall be provided for 800 kV system conforming to IEC 60099-4 in general. Other

characteristics of Surge arrester shall be chosen in accordance with system requirements. Surge arresters shall be provided at line entrances, near Transformers and reactors so as to achieve proper insulation coordination. A leakage current monitor with surge counter shall be provided with each surge arrester.

B.2.5.6 SF_6 to Air Bushing

Outdoor bushings, for the connection of conventional external conductors to the SF_6 metal enclosed switchgear, shall be provided. Bushings shall generally be in accordance with the requirements of IEC-60137. The creepage distance over the external surface of outdoor bushings shall not be less than 31 mm/ kV. SF_6 to air Bushing shall be of Polymer/ composite type and shall be robust and designed for adequate cantilever strength to meet the requirement of seismic conditions. The electrical and mechanical characteristics of bushings shall be in accordance with IEC-60137. Polymer/composite insulator shall be seamless sheath of silicon rubber compound. The housing and weather sheds should have silicon content of minimum 30% by weight. It should protect the bushing against environmental influences, external pollution and humidity. The hollow silicon composite insulators shall comply with the requirements of IEC 61462 and the relevant parts of IEC-62217.

B.2.6 765 kV, 400 kV and 220 kV AIS equipment

B.2.6.1 Circuit Breakers (AIS)

The circuit breakers and accessories shall conform to IEC: 62271-100, IEC: 62271-1 and shall be of SF_6 Type. The circuit breakers shall be of class C2-M2 (as per IEC) with regard to restrike probability during capacitive current breaking and mechanical endurance. The rated break time shall not exceed 40 ms for 765 kV and 400 kV circuit breakers and 60 ms for 220 kV circuit breakers. The 765 kV, 400 kV and 220 kV circuit breakers shall be provided with single phase and three phase auto reclosing. Each breaker would have two sets of trip circuits, which would be connected to separate DC supplies for greater reliability. The circuit breakers controlling 765 kV lines shall be provided with either pre-insertion closing resistor of about 450 ohm maximum with 9 ms insertion time or with Controlled Switching Device. The Circuit breakers controlling 400 kV lines shall be provided with either pre insertion closing resistor of about 400 ohm with 8 ms insertion time or with Controlled Switching Device (CSD) for lines longer than 200 km length. The short line fault capacity shall be same as the rated capacity and this is proposed to be achieved without use of opening resistors. The Controlled Switching Device shall be provided in circuit breakers of switchable line reactor bay and in Main and Tie bay circuit breakers of line with non-switchable line reactors, Bus Reactors and Transformers of 400 kV and above voltage class.

B.2.6.2 Isolators (AIS)

The Isolators shall comply with IEC 62271-102 in general. 765 kV Isolator design shall be double break or vertical break or knee-type. 400 kV and 220 kV Isolators shall be double break type. All Isolators and earth switches shall be motor operated. Earth switches shall be provided at various locations to facilitate maintenance. Isolator rated for 400 kV and 220 kV shall be of extended mechanical endurance class – M2 as per IEC-62271-102. Isolator rated for 220 kV shall be suitable for bus transfer current switching duty as per IEC-62271-102. Main blades and earth blades shall be

interlocked and interlock shall be fail safe type. The 765 kV, 400 kV and 220 kV earth switch for line isolator shall be suitable for induced current switching duty as defined for Class-B.

B.2.6.3 Current Transformers (AIS)

Current Transformers shall comply with IEC 61869 in general. All ratios shall be obtained by secondary taps only. Generally, Current Transformers (CT) for 765 kV and 400 kV shall have six cores (four for protection and two for metering) and 220 kV Current Transformers shall have five cores (four for protection and one for metering). The burden and knee point voltage shall be in accordance with the requirements of the system including possible feeds for telemetry. The accuracy class for the protection core shall be PX and for the metering core it shall be 0.2S. The rated burden of cores shall be closer to the maximum burden requirement of the metering and protection system (not more than 20 VA for metering core) for better sensitivity and accuracy. The instrument security factor shall be less than five (5) for CTs up to 400 kV and less than ten (10) for CTs of 765 kV voltage class.

B.2.6.4 Capacitive Voltage Transformers (AIS)

Capacitive Voltage Transformers shall comply with IEC 61869 in general. These shall have three secondaries out of which two shall be used for protection and one for metering. The accuracy class for protection cores shall be 3P and for metering core shall be 0.2. The Capacitive Voltage Transformers on lines shall be suitable for Carrier Coupling. The Capacitance of CVT for 400 kV and 220 kV shall be of 4400/8800 pF depending on PLCC requirements whereas the Capacitance of CVT for 765 kV shall be 8800 pF. The rated burden of cores shall be closer to the maximum burden requirement of metering and protection system (not more than 50 VA for metering core) for better sensitivity and accuracy.

B.2.6.5 Surge Arresters (AIS)

624 kV, 336 kV Station High (SH) duty and 216 kV Station Medium (SM) duty gapless type Surge Arresters with thermal energy (W_{th}) of minimum 13 kJ/kV, 12 kJ/kV and 7 kJ/kV conforming to IEC 60099-4 in general shall be provided for 800 kV, 420 kV and 245 kV systems respectively. Other characteristics of Surge Arrester shall be chosen in accordance with system requirements. Surge Arresters shall be provided at line entrances, near transformers and reactors so as to achieve proper insulation coordination. Surge Arresters shall be provided with porcelain/ polymer housing fitted with pressure relief devices. A leakage current monitor with surge counter shall be provided with each surge arrester.

B.2.7 Protection Relaying and Control System

The protective relaying system proposed to be provided for transmission lines, auto-transformers, reactors and bus bars to minimize the damage to the equipment in the events of faults and abnormal conditions, is dealt in this section. All main protective relays shall be numerical type with IEC 61850 communication interface and should have interoperability during integration of numerical relays to communicate over IEC 61850 protocol with RTU/SAS/IEDs of different OEMs. All numerical relays shall have built in disturbance recording feature.

The protection circuits and relays of the transformer and reactor shall be electrically and physically segregated into two groups each being independent and capable of providing uninterrupted protection even in the event of one of the protection groups failing, to obtain redundancy, and to take protection systems out for maintenance while the equipment remains in service.

a) Transmission Lines Protection

765 kV, 400 kV and 220 kV lines shall have Main-I numerical three zone distance protection scheme with carrier aided inter-tripping feature. 765 kV, 400 kV and 220 kV lines shall also have Main-II numerical distance protection scheme like Main-I but from different make that of Main-I. The Main-I and Main-II protection relays of same make may be provided only if they are of different hardware and manufacturing platform or different principle of operation.

However, Line Current Differential Relay (with back up distance protection feature) as Main–I and Main-II shall be considered at both ends for short lines (line length below 30 km) having Fiber Optic Communication Link. Differential relay at remote end shall be provided by the TSP. The associated power and control cabling and integration with SAS at remote end shall be provided by respective bay owners.

In case of 220 kV line bays for RE Generators, Line Current differential relay (with back up distance protection feature) as Main-I and Main-II shall be provided. Further, in such cases, the matching line current differential relay for remote end shall be provided by the TSP as loose supply.

Further, all 765 kV, 400 kV and 220 kV lines shall be provided with single and three phase auto-reclosing facility to allow reclosing of circuit breakers in case of transient faults. These lines shall also be provided with distance to fault locators to identify the location of fault on transmission lines.

All 765 kV, 400 kV and 220 kV lines shall also be provided with two stage over voltage protection. The over voltage protection and distance to fault locator may be provided as in-built feature of Main-I and Main-II protection relays. Auto reclose as built-in function of Bay Control Unit (BCU) is also acceptable.

The Main-I and Main-II protection relays shall be fed from separate DC sources and shall be mounted in separate panels.

For 765 kV, 400 kV and 220 kV transmission lines, directional IDMT earth fault relay should be provided as standalone unit or in-built feature of Main-I and Main -II feature.

b) Auto Transformer Protection

These shall have the following protections:

i) Numerical Differential Protection

ii) Numerical Restricted Earth Fault Protection

iii) Numerical Back-up Over-Current and Earth Fault Protection on High Voltage (HV) and Intermediate Voltage (IV) side

iv) Numerical Over Fluxing Protection on HV and IV side

v) Numerical Overload Alarm

Further, Numerical Back-up Over-current and earth fault protection on HV and IV side of autotransformer shall not be combined with other protective functions in the main relays and shall be independent relays. Besides these, power transformers shall also be provided with Buchholz relay, Magnetic Oil Gauge (MOG) with low oil level alarm, protection against high oil and winding temperature and pressure relief device etc.

Suitable monitoring, control (operation of associated circuit breaker and isolator) and protection for LT auxiliary transformer connected to tertiary winding of Auto-transformer for the purpose of auxiliary supply shall be provided. The over current and other necessary protection shall be provided for the auxiliary transformer. These protection and control may be provided as built-in feature either in the bay controller to be provided for the auxiliary system or in the control and protection IEDs to be provided for autotransformer.

c) 765 kV and 400 kV Reactor Protection

Reactor shall be provided with the following protections:

i) Numerical Differential Protection.

ii) Numerical Restricted Earth Fault Protection

iii) Numerical Back-up Impedance Protection

Besides these, reactors shall also be provided with Buchholz relay, Magnetic Oil Gauge (MOG) with low oil level alarm, protection against oil and winding temperatures and pressure relief device, etc.

d) Bus Bar Protection

The high-speed low impedance type bus bar differential protection, which is essential to minimize the damage and maintain system stability at the time of bus bar faults, shall be provided for 765 kV, 400 kV and 220 kV buses. Duplicated bus bar protection is envisaged for 765 kV and 400 kV bus-bar protection. Bus bar protection scheme shall be such that it operates selectively for each bus and incorporate necessary features required for ensuring security. The scheme shall have complete bus bar protection for present as well as envisaged future bays i.e. input / output modules for future bays for the bus section under present scope shall also be provided.

Bus Bar protection system for new substation shall be de-centralized (distributed) type.

In case, the bus section is provided, then each side of bus section shall have separate set of bus bar protection schemes.

Peripheral Units (PUs) shall be provided by the respective bay owners.

For existing substations, the existing bus bar protection shall be augmented as per requirement. Separate set of bus bar protection schemes including necessary modification with respect to feeder distribution shall be provided where new bus sectionaliser is being implemented.

e) Local Breaker Back up Protection

This shall be provided for each 765 kV, 400 kV and 220 kV circuit breakers and will be connected to de-energize the affected stuck breaker from both sides.

Notes:

1. *LBB and REF relays shall be provided separately from transformer differential relay.*
2. *LBB relay may also be provided as built-in protection function of distributed bus bar protection scheme; however in such case separate LBB relay shall be provided for tie bays (in case of One and Half breaker scheme).*
3. *Over fluxing and overload protection can be provided as built-in feature of differential relay.*
4. *In 765 kV and 400 kV switchyard, if spare bay of half diameter is identified as future, Tie CB relay panel shall be with Auto-reclosure feature.*

B.2.8 Substation Automation System

a) For all the new substations, state of art Substation Automation System (SAS) conforming to IEC-61850 shall be provided. The distributed architecture shall be used for Substation Automation System, where the controls shall be provided through Bay Control Units. The Bay Control Unit is to be provided bay wise for voltage level 220 kV and above. All Bay Control Units as well as protection units are normally connected through an Optical fibre high speed network. The control and monitoring of circuit breaker, dis-connector, re-setting of relays etc. can be done from Human Machine Interface (HMI) from the Control Room.

The functions of control, annunciation, disturbance recording, event logging and measurement of electrical parameters shall be integrated in the Substation Automation System.

At the new substations, the Substation Automation System (SAS) shall be suitable for the operation and monitoring of the complete substation including proposed future bays/elements.

In the existing substations with a Substation Automation System (SAS), augmentation of existing SAS shall be done for bays under the present scope.

In the existing Substations where Substation automation is not provided, control functions shall be done through control panels.

Necessary gateway and modems (as required) shall be provided to send data to RLDC/SLDC as per their requirement and shall be provisioned with 2+2 redundancy i.e. 2 channels for Main Control Centre and 2 channels for Backup Control Centre. In order to meet this requirement, suitable redundancy at port and card level need to be ensured by the TSP to avoid any single point of failure which may lead to interruption in real-time grid operation. Accordingly, all the hardware for communication services of station as stated above shall support dual redundancy for data transmission of station to respective main and backup RLDCs. Any augmentation work at RLDC/SLDC is excluded from TSP's scope. However, all the configuration work at substation end

required to send data to RLDC/SLDC shall be in the scope of TSP.

b) Time Synchronization Equipment

Time Synchronization Equipment complete in all respect including antenna, cable and processing equipment required to receive time signal through GPS/NavIC or from National Physical Laboratory (NPL) through INSAT shall be provided at new substations. This equipment shall be used to synchronize SAS and IEDs etc.

B.3.0 Substation Support Facilities

Certain facilities required for the operation and maintenance of substations as described below shall be provided at the new substation. In existing substation, these facilities have already been provided and will be extended/ augmented as per requirement.

B.3.1 AC and DC power supplies

For catering the requirements of three phase and single phase AC supply and DC supply for various substation equipment (for present and future scope), the following arrangement is envisaged:

i) For LT Supply at each new Substation, two (2) Nos. of LT Transformers (minimum 800 kVA for substations with highest voltage rating as 765 kV) shall be provided which shall be fed from two independent sources as per the CEA (Technical Standards for Connectivity to the Grid) Regulations, 2007.

Metering arrangement with Special Energy Meters (SEMs) shall be provided by TSP at 33 kV tertiary of Transformer for drawing auxiliary supply at new substation.Such SEMs shall be provided by CTU at the cost of the TSP. Accounting of such energy drawn by the TSP shall be done by RLDC/RPC as part of Regional Energy Accounting.

Additionally, Active Energy Meters may be provided at the same point in the 33 kV tertiary of Transformer by local SEB/DISCOM for energy accounting.

ii) 2 sets of 220 V battery banks for control and protection and 2 sets of 48 V battery banks for PLCC/ communication equipment shall be provided at each new Substation. Each battery bank shall have a float-cum-boost charger.

At new substation, sizing of 220 V battery and battery charger shall be done based on the number of bays specified (including future bays) as per CEA Regulations and relevant IS. 2 sets of 48 V battery banks for PLCC and communication equipment for present and future scope shall be provided at each new Substation with at least 10-hour battery backup and extended backup, if required.

iii) Suitable AC and DC distribution boards and associated LT Switchgear shall be provided at new substation.

For new substation, following switch boards shall be considered with duplicate supply with bus coupler/ sectionalizer and duplicate outgoing feeders except for Emergency lighting distribution board which shall have only one incoming feeder:

(a) 415 V Main Switchboard – 1 No.
(b) AC distribution board – 1 No.
(c) Main lighting distribution board – 1 No.
(d) Emergency lighting distribution board – 1 No.

(e) 220 Volt DC distribution board – 2 Nos.

(f) 48 Volt DC distribution board – 2 Nos.

Sizing of LT Switchgear shall be suitable to cater the requirement for all present and future bays. AC and DC distribution boards shall have modules for all the feeders (including future as specified).

iv) At new Substation, one No. of DG set (minimum 500 kVA for substations withhighest voltage rating as 765 kV) shall be provided for emergency applications.

v) At new substation, sizing of battery and battery chargers shall be done based on the number of bays specified (including future bays).

vi) For substation extensions, existing facilities shall be augmented as required.

B.3.2 Fire Fighting System

Fire-fighting system for substation including Transformer and Reactor shall conform to CEA (Measures Relating to Safety and Electric Supply) Regulations, 2023 as amended from time to time.

Further, adequate water hydrants and portable fire extinguishers shall be provided in the substations. The main header of the firefighting system shall be suitable for extension to bays covered under the future scope; necessary piping interface in this regard shall be provided.

Optical Beam type heat detection for GIS hall fire protection system shall be provided for all the GIS halls.

At existing substations, the fire-fighting systems as available shall be extended to meet the additional requirements.

B.3.3 Oil evacuating, Filtering, Testing and Filling apparatus

To monitor the quality of oil for satisfactory performance of Transformers, Shunt Reactors and for periodical maintenance necessary oil evacuating, filtering, testing and filling apparatus would be provided at new substations. Oil storage tanks of adequate capacities for storage of transformer oil would be provided.

Online Transformer Oil Drying Out System shall be provided in line with the provisions of Standard Specification and Technical Parameters for Transformers and Reactors (66 kV and above Voltage Class) as amended up to date available on CEA website.

B.3.4 Illumination

Normal and emergency AC and DC illumination shall be provided adequately in the control room and other buildings of the substation. The switchyard shall also be provided with adequate illumination.

The lighting of the entire control room building, fire-fighting pump house, other building (if any) and switchyard shall be done by LED based low power consumption luminaries.

B.3.5 Control Room

For the new substation, substation control room shall be provided to house substation work stations for station level control (SAS) along with its peripheral and recording equipment, AC and DC distribution boards, DC batteries and associated battery chargers, Fire Protection panels, Telecommunication panels and other panels

as per requirements. Air conditioning shall be provided in the building as functional requirements. Main cable trenches from the control room shall have adequate space provision for laying of cables from the control room for all the future bays.

At existing substations, the adequacy of size of control room shall be ascertained and the same shall be augmented as per requirement.

B.3.6 GIS hall

The Gas Insulated Switchgear (GIS) of each voltage level along with other associated equipment shall be housed inside separate GIS building. The panels i.e. Bay level units, bay mimic, relay and protection panels, RTCC panels, PLCC panels, panels for tele-communication system etc. are to be placed in a separate room in the GIS building. The size of the room shall be such that all the panels for the bays under present scope shall be accommodated. The panel room shall be air-conditioned. Further, the temperature of the room shall be monitored through substation automation system by providing necessary temperature transducers. Ventilation system of suitable capacity shall be provided for each GIS hall.

One EOT Crane of suitable capacity for erection and maintenance of largest GIS component/assembly and all plant installed in the GIS switchgear room shall be provided in each GIS hall. The crane shall be capable of fulfilling all special requirements for erection and maintenance of GIS equipment. The capacity of the crane shall be sized to lift the heaviest GIS switchgear component.

For extension of existing GIS, existing facilities shall be suitably augmented/ extended for GIS equipment under present scope.

B.3.7 Control Concept

All the EHV circuit breakers in substation/switching stations shall be controlled and synchronized from the switchyard control room/remote control center. All the isolators shall have control from remote/local whereas the earth switches shall have local control only.

B.3.8 Visual Monitoring System (VMS) for watch and ward of substation premises:

Visual Monitoring System for effective watch and ward of substation premises shall cover all the transformers and reactors, all other major AIS Equipment (such as CB, isolators, CT, CVT, SA etc. as applicable), GIS bays, panel room, all the gates of switchyard and all entry and exit points of control room building and accordingly the location of cameras shall be decided. In addition to the gates of the switchyard, the cameras shall also be located around the boundaries at suitable locations. The camera shall be high-definition color CCD camera with night vision feature. The VMS data partly/completely shall be recorded (minimum for 15 days) at least @25fps (or better) and stored on network video recorder. The system shall use video signals from various cameras installed at different locations, process them for viewing on workstations/monitors in the control room and simultaneously record all the cameras. The VMS data should go only to the intended personnel/facility and not to the remote server of the Camera (VMS supplier).

Mouse/keyboard controllers shall be used for pan, tilt, zoom and other functions of the desired camera. The Visual Monitoring System shall have provision of WAN connectivity for remote monitoring.

All camera recordings shall have Camera ID and location/area of recording as well as date/time stamp. The

equipment should generally conform to Electromagnetic compatibility requirement for outdoor equipment in EHV substation.

Advisory on deployment of CCTV issued by Ministry of Electronics and Information Technology (MEITY) shall be followed.

At existing substations, the Visual Monitoring System if available shall be augmented as per existing or better specification as required.

B.4 General Facilities

a) Line Gantry/Towers are envisaged for bays under the present scope only. However, for adjacent future line bay, gantry/tower shall be designed for extension (considering Hexa conductors for 765 kV and Quad conductors for 400 kV and Twin conductor for 220 kV future lines) wherever applicable.

b) Bay extension works at existing substation shall be executed by TSP in accordance with the requirements/provisions mentioned above. However, interface points shall be considered keeping in view the existing design/arrangement at the substation.

c) The TSP shall design the layout of the new substation in such a manner that no overhead transmission lines passes through the identified future area of switchyard expansion.

d) In case of GIS, adequate provisions shall be made to ensure that both the GIS hall and the substation switchyard can be expanded on either side of the existing GIS hall.

e) TSP has to arrange for construction power and water on its own.

f) All outdoor steel structures including anchor/foundation bolts shall be fully galvanized. The weight of the zinc coating shall be at least 610 g/m^2, however, for coastal/creek regions it shall be at least 900 g/m^2. (if applicable)

g) In 765 kV and 400 kV switchyard, if spare bay of half diameter is identified as future, all the equipment for Tie and Future Bay shall be designed considering the current rating of line bay i.e. 3150 A.

h) Boundary wall shall be brick masonry wall with RCC frame or Stone masonry wall or Precast RCC wall under present scope along the property line of complete substation area including future switchyard area to prevent encroachment and unauthorized access. Minimum height of the boundary wall shall be of 1.8 m from Finished Ground Level (FGL).

i) All electrical equipment shall be installed above the Highest Flood Level (HFL) and where such equipment is not possible to be installed above Highest Flood Level, it shall be ensured that there is no seepage or leakage or logging of water.

j) As per CEA (Technical Standards for Construction of Electrical Plants and Electric Lines) Regulations 2022 and CEA Manual on Transmissions Planning criteria 2023, line approaching

substation shall normally be perpendicular to the substation boundary for a stretch of 2-3 km. Accordingly, TSP shall ensure that line terminations at substations are arranged in a manner to avoid hindrance to future line terminations at the substations.

k) TSP shall finalize the substation site/layout such that the corridor for the termination of lines, including future lines at the substation, can be accommodated without any constraints. Accordingly, forests, large water bodies, or hills adjacent to the substation boundary should be avoided.

B.5 EXTENSION OF EXISTING SUBSTATION

The following drawings/details of existing substation are attached with the RfP documents for further engineering by the bidder.

No.	Drawing Title	Drawing No./Details	Rev. No.
A.	**765kV South Olpad (GIS) S/s**		
1.0	Single Line Diagram	508SLP-KEC-GIS-E-DW-4000	R6
2.0	General Arrangement	SOUTH OLPAD/GA	0
3.0	Earthmat Layout		
4.0	Visual Monitoring System		
5.0	Bus Bar Protection		
6.0	Substation Automation System (SAS)		
B.	**400 kV Pimpalgaon S/s**		
1.0	Single Line Diagram	PSLD/PRJ30/PG/001	R0
2.0	General Arrangement	PSLD/PRJ30/PG/002	R2
3.0	Earthmat Layout		
4.0	Visual Monitoring System		
5.0	Bus Bar Protection		
6.0	Substation Automation System (SAS)		

LOCATION DETAILS OF EXISTING / PLANNED SUBSTATIONS

a) **765/400/220 kV Nasik S/s:** New substation which is to be implemented under present scheme
b) **765 kV South Olpad (GIS) S/s:** 21°21'17.3" N, 72°46'16.0" E
c) **400 kV Pimpalgaon (MSETCL) S/s:** 20°10'11.34" N, 74°08'11.00" E

Note: *The above coordinates/location of substation indicated is approximate in the substation area. Exact coordinates for the corresponding bays/gantry for termination of the respective line may be verified & finalized in coordination with actual site*

B.5.1 The existing drawings provided above and in subsequent amendments to the RfP are as received from the developer of existing substation and provided only for reference. Bidders shall follow the RfP for scope of work. Actual site conditions may be different due to other schemes being executed or subsequent revisions by the developer. Thus, Bidders are advised to visit the substation sites and acquaint themselves for details such as:

i. Actual site conditions, Layout, Topography
ii. Infrastructure such as roads, cable trench, drainage
iii. Space availability in existing control room and LT panel room
iv. Soil Investigation
v. Fire Hydrant Layout
vi. SAS architecture and IO list
vii. Boundary
viii. Design philosophy etc.

SPECIFIC TECHNICAL REQUIREMENTS FOR COMMUNICATION

The communication requirement shall be in accordance to CEA (Technical Standards for Communication System in Power System Operations) Regulations, 2020, CEA (Technical Standards for Construction of Electrical Plants and Electric Lines) Regulations, 2022, CERC (Communication System for inter-State transmission of electricity) Regulations, 2017, CEA Guidelines on Unified Philosophy for placement of PMUs in Indian Grid, March 2025, CEA (Cyber Security in Power Sector) Guidelines, 2021, CERC Guidelines on "Interface Requirements" 2024 and all above documents as amended from time to time.

The communication services viz. SCADA, AGC (wherever applicable), VoIP, AMR and PMU have been identified as critical services and therefore shall be provisioned with 2+2 redundancy i.e. 2 channels for Main Control Centre and 2 channels for Backup Control Centre. In order to meet this requirement, suitable redundancy at port and card level need to be ensured by the TSP to avoid any single point of failure which may lead to interruption in real-time grid operation.

PMU to PDC communication (wherever required) shall be through 2 channels to the PDC (main) as there is no backup PDC at present.

Accordingly, all the hardware for communication services of station as stated above shall support dual redundancy for data transmission of station to respective main and backup RLDCs

The complete ISTS communication system commissioned by TSP under the RFP shall be the asset of ISTS and shall be available for usage of ISTS requirements as suggested by CTU from time to time.

In order to meet the requirement for grid management and operation of substations, Transmission Service Provider (TSP) shall provide the following:

C.1.0 Establishment of 765/400 kV Nasik S/s

i) TSP shall supply, install & commission one or more FODP with minimum 336 Fiber capacity with panel and required approach Cables (48F each) with all associated hardware fittings from gantry towers to Control Room for all the incoming lines envisaged under the present scope.

ii) TSP shall supply, install & commission One or more STM-16 (FOTE) equipment alongwith panel/s supporting minimum **seven (7)** MSP (Multiplex Section Protection – 1+1) STM-16 directions alongwith required interfaces to meet the voice and data communication requirement among **Pimpalgaon (MSETCL) S/s**, **South Olpad (GIS), Nasik S/s and upcoming 220 kV line bays for MSETCL**. These directions shall exclude protected (1+1) local patching among equipment (if any). The suitable DC Power Supply and backup to be provided for communication equipment.

iii) FODP & FOTE equipment with panels shall be provided in Control Room of **Nasik S/s.** FOTE &

FODP Eq can be accommodated in same panel to optimize space.

iv) The new communication equipment under the present scope shall be compatible for integration with existing regional level centralized NMS. The local configuration of the new communication equipment shall be the responsibility of TSP. The configuration work in the existing centralized NMS for integration of new Communication equipment shall be done by Regional ULDC Team, however all the necessary support in this regard shall be ensured by TSP.

v) TSP shall deploy Cyber Security System in compliance with CEA (Cyber Security in Power Sector) Guidelines, 2021 and CEA (Cyber Security in Power Sector) Regulation, from its date of publication/ notification and their amendments thereof.

vi) The maintenance of all the communication equipment and software thereof including FOTE, FODP, PMU, approach cable, DCPS alongwith Battery Bank & Cyber Security System shall be the responsibility of TSP.

C.2.0 South Olpad (GIS) – Nasik 765kV D/C line

i) On Nasik S/s – South Olpad (GIS) 765kV D/c line, TSP shall supply, install & commission One (1) no. OPGW cable containing 48 Fibres (48F) on one E/W peak and conventional earth wire on other E/W peak. The TSP shall install this OPGW from gantry of **Nasik S/s** up to the gantry of **South Olpad (GIS)** with all associated hardware including Vibration Dampers, mid-way & gantry Joint Boxes (called **OPGW Hardware** hereafter) and finally terminate in Joint Boxes at end Substations.

ii) The transmission line length is **240 kms (approx**.), where repeater may be required to meet the link budget requirement of **Nasik S/s – South Olpad (GIS**) link. To meet link budget requirement of **Nasik S/s – South Olpad (GIS)** link (including service loops and sag etc.) 1 set of FOTE at repeater station to be provided by TSP.

iii) TSP shall finalize the location of repeater station depending upon the actual site conditions. Further, TSP shall comply with the requirements mentioned as per **Appendix-F.1.**

iv) Maintenance of OPGW Cable, OPGW Hardware & repeater equipment & items associated with repeater shelter shall be the responsibility of TSP.

C.3.0 2 Nos. 765kV line bays at South Olpad (GIS) S/s (Sec-II) for South Olpad – Nasik 765kV D/C line

i) TSP shall supply, install & commission one or more FODP with minimum 144 Fiber capacity with panel and required approach Cables (48F each) with all associated hardware fittings from gantry towers to Bay Kiosks and from the Bay Kiosks to Control room

ii) TSP shall supply, install & commission One or more STM-16 (FOTE) equipment alongwith panel/s supporting minimum **three (3)** MSP (Multiplex Section Protection – 1+1) STM-16 directions alongwith required interfaces at **South Olpad (GIS**) to meet the voice and data communication requirement between **South Olpad S/s and Nasik S/s**. These directions shall exclude protected (1+1) local patching among equipment (if any). The suitable DC Power Supply and backup to be provided for communication equipment.

iii) FOTE/FODP panel shall be installed in the new Bay Kiosk/ Switchyard Panel Room (SPR). The FOTE under present scope shall be integrated by TSP with the FOTE at control room of **South Olpad (GIS)** which shall be communicating with respective control center. TSP to provide necessary FODP sub rack / Splice trays/ Patch cords etc. and optical interfaces/equipment in the existing/ upcoming FOTE/FODP panels in control room for integration with the existing FOTE for onwards data transmission.

In case spare optical direction is not available in the existing/ upcoming FOTE at the control room, the TSP shall coordinate with station owner to reconfigure the directions in existing FOTE at control room. Alternatively, The TSP may integrate the FOTE under the present scope with existing/ upcoming FOTE in the nearby Kiosk connected to the control room FOTE (if available with spare direction). For this purpose, TSP shall provide necessary FODP sub rack / Splice trays/ Patch cords etc. and suitable optical interfaces/ equipment in the existing/ upcoming FOTE/FODP panels in another Kiosk (SPR).

iv) FOTE & FODP can be accommodated in same panel to optimize space.

v) The new communication equipment under the present scope shall be compatible for integration with existing regional level centralized NMS. The local configuration of the new communication equipment shall be the responsibility of TSP. The configuration work in the existing centralized NMS for integration of new Communication equipment shall be done by Regional ULDC Team, however all the necessary support in this regard shall be ensured by TSP.

The maintenance of all the communication equipment and software thereof including FOTE, PMU, FODP, approach cable, DCPS alongwith Battery Bank shall be the responsibility of TSP.

C.4.0 Nasik S/s – Pimpalgaon (MSETCL) 400kV D/C line (Quad ACSR/AAAC/AL59 moose equivalent)

i) On Nasik S/s – Pimpalgaon (MSETCL) S/s 400kV D/c line, TSP shall supply, install & commission One (1) No. OPGW cable containing 48 Fibres (48F) on one E/W peak and conventional earth wire on other E/W peak. The TSP shall install this OPGW from gantry of **Nasik S/s** up to the gantry of **Pimpalgaon (MSETCL**) S/s with all associated hardware including Vibration Dampers, mid-way & gantry Joint Boxes (called **OPGW Hardware** hereafter) and finally terminate in Joint Boxes at end Substations.

ii) The transmission line length is **80 kms (approx.)**, where repeater may not be required to meet the link budget requirement of **Nasik – Pimpalgaon** (**MSETCL)** link.

iii) Maintenance of OPGW Cable, OPGW Hardware & repeater equipment & items associated with repeater shelter shall be the responsibility of TSP.

C.5.0 2 Nos. 400 kV line bays at Pimpalgaon S/s for Nasik – Pimpalgaon (MSETCL) 400kV D/C line (Quad ACSR/AAAC/AL59 moose equivalent)

i) TSP shall supply, install & commission one or more FODP with minimum 144 Fiber capacity with panel and required approach Cables (48F each) with all associated hardware fittings from gantry towers to Bay Kiosk and from the Bay Kiosks to Control room.

ii) TSP shall supply, install & commission One or more STM-16 (FOTE) equipment alongwith panel/s supporting minimum **three (3**) MSP (Multiplex Section Protection – 1+1) STM-16 directions alongwith required interfaces at **Pimpalgaon (MSETCL) S/s** meet the voice and data communication requirement between **Pimpalgaon (MSETCL) S/s and Nasik S**/s. These directions shall exclude protected (1+1) local patching among equipment (if any). The suitable DC Power Supply and backup to be provided for communication equipment.

iii) FOTE/FODP panel shall be installed in the new Bay Kiosk/ Switchyard Panel Room (SPR). The FOTE under present scope shall be integrated by TSP with the FOTE at control room of **Pimpalgaon (MSETCL) S/s** which shall be communicating with respective control center. TSP to provide necessary FODP sub rack / Splice trays/ Patch cords etc. and optical interfaces/equipment in the existing FOTE/FODP panels in control room for integration with the existing/ upcoming FOTE for onwards data transmission.

iv) In case spare optical direction is not available in the existing/ upcoming FOTE at the control room, the TSP shall coordinate with station owner to reconfigure the directions in existing/ upcoming FOTE at control room. Alternatively, The TSP may integrate the FOTE under the present scope with existing/ upcoming FOTE in the nearby Kiosk connected to the control room FOTE (if available with spare direction). For this purpose, TSP shall provide necessary FODP sub rack / Splice trays/ Patch cords etc. and suitable optical interfaces/ equipment in the existing/ upcoming FOTE/FODP panels in another Kiosk (SPR).

v) FOTE & FODP can be accommodated in same panel to optimize space.

vi) The new communication equipment under the present scope shall be compatible for integration with existing regional level centralized NMS. The local configuration of the new communication equipment shall be the responsibility of TSP. The configuration work in the existing centralized NMS for integration of new Communication equipment shall be done by Regional ULDC Team, however all the necessary support in this regard shall be ensured by TSP.

The maintenance of all the communication equipment and software thereof including FOTE, PMU, FODP, approach cable, DCPS alongwith Battery Bank shall be the responsibility of TSP.

C.6.0 Specific Requirement for Phasor Measurement Units (PMUs)

TSP shall supply, install & commission required no. of Phasor Measurement Units (PMUs) as per Guidelines for Unified Philosophy for Placement of Phasor Measurement Units (PMUs) in Indian Grid (along with all amendments if any) dated March 25 and all the applicable Regulations, Standards, Guidelines issued time to time. These PMUs shall be provided with GPS clock and LAN switch and shall connect with LAN switch of control room of respective substations/ generating stations with Fibre Optic cable. These PMUs shall be connected with the FOTE at Substation/ generating stations for onwards data transmission to the PDC (Phasor Data Concentrator) located at respective RLDC. Configuration work in existing PDC at RLDC for new PMU integration shall be done by respective RLDC, however all the necessary support in this regard shall be ensured by TSP. The maintenance of all the PMUs and associated equipment shall be the responsibility of TSP.

Note: Existing Station owner/s to provide necessary support to integrate different equipment & applications of new extended bays with the existing substation e.g. Communication (through FOTE), Voice etc. for smooth operation and monitoring of new added grid elements.

Communication system integration in UNMS/CSMS

TSP is to ensure integration of communication system into UNMS/CSMS as per following:

"The new communication equipment/ system under the present scope shall be compatible for integration with existing regional level NMS system/ Centralized Supervision & Monitoring System (CSMS) i.e. Regional UNMS. The local configuration of the new communication equipment/ system at the station end shall be the responsibility of TSP as per followings. The configuration work in the existing centralized NMS/ UNMS at Control center end, for integration of new Communication equipment/ system shall be done by Regional ULDC Team/ NMT, however all the necessary support in this regard shall be ensured by TSP.

Requirement for integration of Communication Equipment/ system with Regional UNMS:

1. TSP shall ensure that NMS/EMS/NE supplied by them is NBI compliant and all FCAPS functionality is supported in the NBI such as NE Inventory, Hardware Inventory– Shelf/Slot/Card/SFP/Port, Topology, Protections, Alarms, Performance-real time & periodic, Performance KPI parameters (E-1, STM, Ethernet), Remote Configuration, Cross Connects, Trails & Circuits, Services Provisioning (NE), E-1, STM, Ethernet, TX & RX Trace, loop back and details are published in the NBI guide for the configuration parameters.

2. TSP shall be obliged to provide/share all necessary documentations such as NBI Guide/MIB/IDL/WSDL/API files etc. for onward integration of their NMS/EMS/NE with regional UNMS.

3. The following support shall be provided by TSP for integration of their supplied equipment with regional UNMS.
   - Enabling & activating NBI license in their EMS/NMS and providing NBI login access along with User credentials.
   - Assist in verifying NBI Connectivity with UNMS vendor for the successful communication and retrieval of data.
   - Assist in troubleshooting (if required) for NBI connectivity along with UNMS vendor for the communication and retrieval of data.

4. For standalone NE which is not integrated with any EMS/NMS, TSP shall provide modality of complete FCAPS data acquisition as above through industry standard programmatic methods and provide the CLI command manual."

Appendix-F.1

Repeater Requirements

- If the repeater location is finalized in the Control Room of a nearby substation, TSP shall provide OPGW to accommodate all the fibers in main transmission line on a single Earthwire peak with OPGW Hardware & mid-way Joint Boxes etc. of the line crossing the main line and required approach Cable to accommodate all the OPGW fibers with all associated hardware fittings, to establish connectivity between crossing point of main transmission line up to the repeater equipment in substation control room. TSP shall co-ordinate for Space & DC power supply sharing for repeater equipment.
  TSP shall provide FODP, FOTE (with STM-16 capacity) with suitable interfaces required for link budget of respective link.

OR

- If the repeater location is finalized in the nearby substation premises, the TSP shall identify the Space for repeater shelter in consultation with station owner. Further TSP shall provide OPGW to accommodate all the fibers in main transmission line on a single Earthwire peak with OPGW Hardware & mid-way Joint Boxes etc. of the line crossing the main line and required approach Cable/UGFO to accommodate all the OPGW fibers with all associated hardware fittings, to establish connectivity between crossing point of main transmission line up to the substation where the repeater shelter is to be housed. TSP shall provide repeater shelter along with FODP, FOTE (with STM-16 capacity) with suitable interfaces require for link budget of respective link, reliable power supply provisioning for AC and DC supply, battery bank, Air Conditioner and other associated systems.

OR

- If the repeater location is finalized on land near the transmission tower. TSP shall make the provisions for Land at nearby tower for repeater shelter. Further TSP shall provide required approach Cable to accommodate all the OPGW fibers with all associated hardware fittings to establish connectivity up to the location of repeater shelter.TSP shall provide repeater shelter along with FODP, FOTE (with STM-16 capacity) with suitable interfaces require for link budget of respective link, reliable power supply provisioning for AC and DC supply, battery bank, Air Conditioner and other associated systems
  Maintenance of OPGW Cable and **OPGW Hardware**, repeater equipment & items associated with repeater shelter shall be responsibility of TSP.
  Note: *Existing Station owner/s to provide necessary support to integrate different equipment & applications of new extended bays with the existing substation e.g. Communication (through FOTE), PMUs, Voice etc. for smooth operation and monitoring of new added grid elements.*

Common Transmission System for evacuation of power from Lakadia (Phase II: 7.5GW), Jam Khambhaliya (Phase-II: 5.5GW) and Jamnagar (Phase-I: 1GW) - Part-B (Est. Cost: 3839 Cr.)

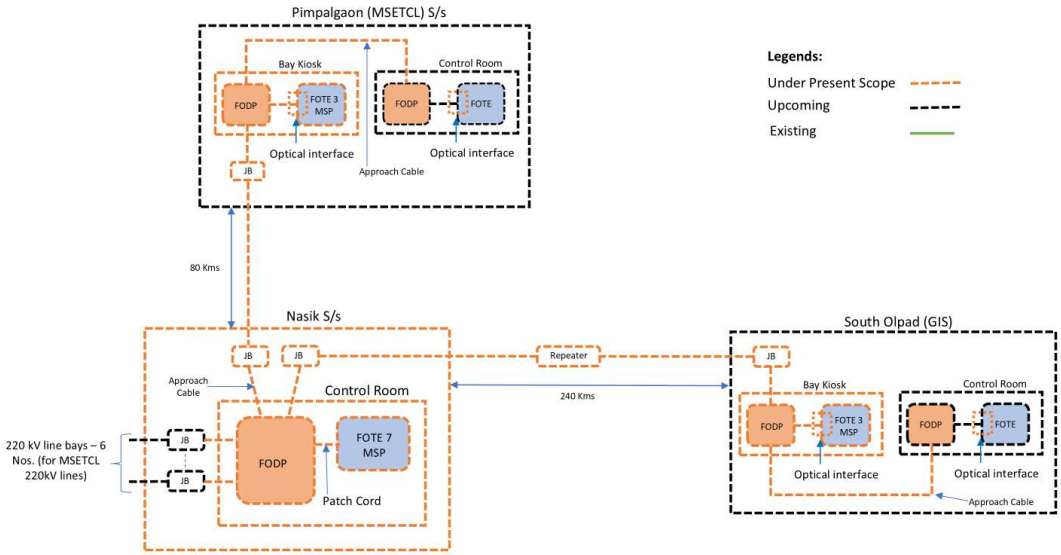

Figure F.1

C.7.0 PLCC and PABX:

Power line carrier communication (PLCC) equipment complete for speech, tele-protection commands and data channels shall be provided on each transmission line. The PLCC equipment shall in brief include the following: -

- Coupling device, Coupling filters line traps, carrier terminals, protection couplers, HF cables, PABX (if applicable) and maintenance and testing instruments.
- At new substation, a telephone exchange (PABX) of 24 lines shall be provided at as means of effective communication among various buildings of the substation, remote end substations and with control centers (RLDC/ SLDC) etc.
- Coupling devices shall be suitable for phase-to-phase coupling for 400 kV Transmission lines. The pass band of coupling devices shall have sufficient margin for adding communication channel in future if required. Necessary protection devices for safety of personnel and low voltage part against power frequency voltages and transient over voltage shall also be provided.
- The line traps shall be broad band tuned suitable for blocking the complete range of carrier frequencies. Line Trap shall have necessary protective devices such as lightning arresters for the protection of tuning device. Decoupling network consisting of line traps and coupling capacitors may also be required at certain substation in case of extreme frequency congestion.
- The carrier terminals shall be of single side-band (SSB) amplitude modulation (AM) type and shall have 4 kHz band width. PLCC Carrier terminals and Protection couplers shall be considered for both ends of the line.
- PLCC equipment for all the transmission lines covered under the scheme shall be provided by TSP. PLCC to be provided for following lines under present scope:

Sl. No	Line name	PLCC configuration
1.	South Olpad (GIS) – Nasik 765 kV D/C line	1 set Analog PLCC + 1 set Digital Protection Coupler for each circuit at both ends.
2.	Nasik–Pimpalgaon (MSETCL) 400 kV D/C line	1 set Analog PLCC + 1 set Digital Protection Coupler for each circuit at both ends.

- Further, CVT and Wave trap for all 765 kV ,400 kV and 220 kV line bays under present scope shall be provided by TSP.
- All other associated equipment like cabling, coupling device and HF cable shall also be provided by the TSP.
- Two (2) sets of 48 V battery banks for PLCC and communication equipment shall be provided at each new Substation with at least 10-hour battery backup and extended backup, if required.

Frequently Asked Queries:

1.0 Transmission Line:

1.1 Please clarify that whether shutdowns for crossing of existing transmission lines of POWERGRID/STUs/ Power Evacuation Lines from Generation Plants/ Any other Transmission Licensee will be given to TSP on chargeable basis or free of cost.

Reply: Shutdowns for crossing of existing transmission lines of POWERGRID/ STUs/ Power Evacuation Lines from Generation Plants/ Any other Transmission Licensee will be given to TSP by the concerned owner of the lines as per their own terms and conditions. As far as shutdown of ISTS lines are concerned the same can be availed by approaching respective Regional Power Committee.

1.2 We understand that the suggested swing angle criteria are applicable for Suspension Insulator in Suspension Tower. Further, you are requested to provide similar swing angle and clearance criteria for Pilot Insulator with Jumper and Jumper.

Reply: It is clarified that the swing angle criteria (as mentioned in RFP) for transmission lines is applicable for Suspension Insulator in Suspension Tower. Further, as per Clause 3.0 of Specific Technical Requirements for transmission lines, Transmission service Provider (TSP) shall adopt any additional loading/design criteria for ensuring reliability of the line, if so desired and /or deemed necessary.

1.3 We request you to kindly allow that use of diamond configuration at Power line crossings and the existing owner of the lines may be directed to allow the same for the successful bidders.

Reply: Power line crossing including Diamond configuration is the responsibility of the TSP. TSP shall formally submit the profile of the crossing section to the owner of the existing line suggesting proposed crossing alternatives. The crossing will have to be carried out as per approval of owner of the existing line.

1.4 It is requested you to kindly provide present status of Forest Clearances if any transmission line corridor area falling in wildlife forest / reserve forest/ mangroves

Reply: Based on the preliminary route survey, the process of initiation of forest clearance for the forest stretches, if any, enroute the proposed line alignment will be initiated by way of writing letters to the concerned authority (ies). However, it may be noted that it will be the responsibility of TSP for obtaining forest clearance for the forest stretches as provided in the survey report and also for any forest area encountered during detailed survey.

1.5 For transmission line, no special requirement is specified for type of Insulator and creepage in RFP document. Hence it is understood that bidder can decide the type of insulator along with creepage requirement based on general CEA regulations and relevant standards. Kindly confirm.

Reply: The minimum specific creepage distances shall be decided for the site pollution severity in the area of installation keeping in mind further increase in pollution during life of the line. It shall be as per

CEA regulations and relevant standards. However, the tower shall be designed considering the porcelain insulators with creepage factor of 31 mm/kV irrespective of type of insulator used.

2.0 Substation

2.1 We understand that space for storage of O&M spare shall be provided by the existing owner within the station boundary without any cost. Kindly confirm.
Reply: Space for storage of O&M spares shall be arranged by TSP on its own.

2.2 We presume that the O&M for the end Termination bays will be in the scope of the TSP and TSP shall not be liable for any payment towards O&M to the existing owner of the substation. Kindly confirm.

Reply: Operation and maintenance of the bays is solely the responsibility of the TSP. Further, TSP shall follow CEA's "Operation and Maintenance (O&M) guidelines and Standard Format for Memorandum of Understanding between New TSP and Existing TSP" issued by CEA vide its letter No. I/28514/2023 dated 22.06.2023.

2.3 With reference to subject scheme of existing sub-station, we assumed following scope of work:

(a) We assumed internal road is available and need not to be consider in the present scope of work.
(b) Drainage is available and need not to consider in the present scope of work.
(c) Cable trench extension adjacent to Main cable trench only under present scope of work.
(d) Levelled area being provided by developer for bay extension.

Reply: Regarding requirement of internal road, drainage, cable trench, leveling of the bay extension area, bidder is advised to visit site and acquaint themselves with the provisions/facilities available at substation.

2.4 Kindly provide the soil investigation report of soil parameters of existing substation.

Reply: Bidder is advised to visit the substation site and ascertain the requisite parameters.

2.5 Kindly confirm, energy accounting of aux. power consumption. Whether it will be on chargeable basis or part of transmission loss.

Reply: It will be on a chargeable basis.

2.6 We understand that VMS requirement is for unmanned stations only. For Manned stations VMS is not compulsory.

Reply: VMS shall be provided in line with requirements of RFP document.

2.7 It is understood that Construction water and power shall be provided free of cost to TSP by the

respective substation owner for construction of new bays.

Reply: Arrangement of construction power and water is in the scope of TSP.

2.8 It is understood that the existing fire hydrant system shall be extended by the TSP for bay extension.

Reply: Existing fire hydrant system shall be extended from existing system (if required)

2.9 Please clarify the Status of land acquisition for new Substations. Whether the lands have been acquired by BPC and will be transferred to TSP.

Reply: The acquisition of land for new substation is in the scope of TSP.

2.10 We understood that no any dedicated metering CT and CVT required for Line/feeders. Further, we understood that requisite Energy meters for various 765kV, 400 kV and 220 kV Feeders shall be provided and installed by CTU free of cost to TSP.

Reply: Dedicated metering CT and CVT are not required for line/feeders. Metering core of existing CT/CVT can be used provided accuracy class matches with metering requirement. Requisite Special Energy Meters shall be provided and installed by CTU at the cost of TSP in C&P panel subject to space availability, else, in separate metering panel (to be provided by TSP at its cost).

2.11 A draft copy of the Connection Agreement may be furnished. A draft copy of the Connection Agreement may be furnished.

Reply: Web page link https://www.ctuil.in/formats_gna_transition

2.12 Please clarify whether the spare 765 kV single phase Reactor unit for Bus reactor shall be provided with 1ph 765 kV CB.

Reply: As per RfP, the spare 1-Ph reactor unit shall be utilized for all the bus and switchable line reactor banks (including for future reactor banks). Hence, 1ph 765 kV CB shall also be provided with spare 1-Ph reactor for utilizing with bus reactor as well as switchable line reactor.

2.13 It is understood that existing busbar protection has provision for future bays and also PUs are available for future bays. BPC to confirm availability of CU and PU for bays under present scope of work at existing substations. BPC may kindly confirm availability of communication ports for integrating new PUs with the existing CUs at existing substations.

Reply: Bus Bar Protection with Central Unit (CU) is required for the new bus section as specified in RFP. Peripheral Units (PUs) shall be provided by the respective bay owner. Further, augmentation/replacement of existing CU, if required, to meet the system requirement shall also be provided for proper functioning of bus bar protection.

2.14 For SCADA, it is understood that necessary process I/O shall be available for future bays and accordingly license for same. BPC to confirm.

Reply: Necessary process I/O along with license shall be in the scope of the successful bidder.

2.15 No separate FF system is envisaged under the present scope of work for existing substation. BPC to confirm.

Reply: Existing fire-fighting systems shall be extended to meet the additional requirements under present scope.

2.16 PLCC for 220 kV Lines are not under the scope of TSP. BPC to Confirm.It is requested to provide Type of Coupling for 220 kV Transmission Lines under present scope.

Reply: PLCC for 220 kV line is in the scope of developer of the line. Inter circuit coupling for 220 kV D/C and phase to phase coupling for 220 kV S/C shall be applicable for PLCC.

2.17 BPC is requested to confirm the availability of space in the existing control rooms at existing substation for execution of extension work under current project.

Reply: Switchyard Panel Rooms are generally required for AIS type substation and relay room are required for GIS type substation. Further, if needed, the control room shall be augmented as per requirement.

3.0 Communication

3.1 What are the usage of OPGW, FOTE, PMU etc. under communication requirement of RFP?

Reply: User shall be responsible for providing compatible equipment along with appropriate interface for uninterrupted communication with the concerned control center and shall be responsible for successful integration with the communication system provided by CTU.
Communication systems e.g. OPGW, FOTE etc. and PMU are required for grid operation through RLDC/SLDC, speech communication, tele-protection and tele-metering.

3.2 Is space for installation of communication panels are provided to TSP in existing Substations incase new bays are in the scope of TSP?

Reply: The space related issues are deliberated in the RfP itself. TSP to install FOTE/FODP panels in the new Bay Kiosk (Switchyard Panel Room (SPR)) / Bay Kisok/ Relay Panel Room (in case of GIS S/s). Further, TSP to connect and integrate the proposed FOTE with the existing FOTE in the control room to complete the communication path upto RLDC.

In Case 132 kV Substation TSP shall accommodate the said panels either by extension of existing control room or other arrangements.

3.3 How is the OPGW laying done in case of LILO lines?

Reply: In case LILO lines are on same towers (e.g. both Line in and Line Out portion are on same towers, generally done LILO of S/C lines). Then 2x48F OPGW shall be required to install by TSP

on both earthwire peak on 400 kV and 765 kV lines where two E/W peaks are available. On 220 kV and 132 kV lines where only one E/W peak is available TSP to install one No. 96F OPGW. Incase LILO lines are on different towers (e.g. both Line In and Line Out portion are on different towers, generally done LILO of D/C lines). Then 1x48F OPGW shall be required to install by TSP on one earthwire peak and conventional earthwire on second earthwire peak, on both Line In and Line Out portion towers of 400 kV and 765 kV lines. On 220 kV and 132 kV lines where only one E/W peak is available TSP to install one No. 48F OPGW in place of conventional earthwire.

3.4 How is the OPGW laying done in case Multi circuit Towers?

Reply: In case two different lines are using common multi circuit portion for some distance (originating from different stations, may be terminating on same or on different stations). Two No. 48F OPGW to be installed on both E/W peaks for common M/C portion of 765 kV and 400 kV lines.

Incase 220/132 kV lines using multi circuit portion where single E/W peak is available one No. 96F may be installed for common multi circuit portion.

3.5 How PMUs are integrated for new bays at existing Substations?

Reply: PMU data of new bays to be provided in the ethernet port of switch at control room and thereafter to be connected with existing FOTE of existing substation to send data to PDC of RLDC by TSP. These PMUs shall be provided with GPS/NavIC clock and LAN switch and shall connect with LAN switch of control room of respective substations with Fiber Optic cable. In this regard, the "Guidelines on Unified Philosophy for placement of PMUs in Indian Grid" issued vide letter No. CEA-PS-14-12/9/2024-PSETD Division dated 19.03.2025 shall be followed.

3.6 Is Spare direction available in existing FOTE for integration with new bay kiosk FOTE

Reply: The FOTE under present scope shall be integrated by TSP with the existing FOTE at control room of substation for onwards data Transmission.

In case spare optical direction is not available in the existing FOTE at the control room, the TSP shall coordinate with station owner to reconfigure the directions in existing FOTE at control room.

3.7 What is the distance from LILO point to proposed substation for feasibility of repeater station?

Reply: Tentative Location of LILO point shall be as per survey report of BPC however, exact location to be ascertained after detailed survey by TSP.

3.8 What is the make and model of existing OPGW in case LILO of main line at new substation?

Reply: All OPGW (alongwith optical fibers) meet Central Electricity Authority (Technical Standards for Communication System in Power System Operations) Regulations, 2020 and bidder shall install OPGW accordingly.

3.9 In case of LILO of existing line at new substation who shall provide PMUs at existing substation bays?

Reply: TSP shall provide the PMUs for the scope under the RfP in the compliance of the "Guideline on Unified Philosophy for placement of PMUs in Indian Grid" issued vide letter No. CEA-PS-14-12/9/2024-PSETD Division dated 19.03.2025.

4.0 Planning :

4.1 Whether the Project/ Elements are eligible for early commissioning incentive as per MoP, GoI order dated 15.07.2015.?

Reply: Commissioning is to be done as per the timeline mentioned in RfP. However, early commissioning shall be treated as per applicable CERC Regulations/orders.

Amendment-I dated 14.05.2026 to the RFP Documents for selection of bidder as Transmission Service Provider for "Common Transmission System for evacuation of power from Lakadia (Phase-II: 7.5 GW), Jam Khambhaliya (Phase-II: 5.5GW) And Jamnagar (Phase-I: 1GW): Part-B" through tariff based competitive bidding process.

Sl. No.	Clause No.	Existing Clause	New/Revised Clause
1	RFP, TSA & SPA	Name of the Project Specific SPV	All the reference to the name of the SPV may be read as "***JAM KHAMBHALIYA JAMNAGAR POWER TRANSMISSION LIMITED***"

Amendment-II dated 02.06.2026 to RFP Documents for selection of Bidder as Transmission Service Provider to establish Inter-State Transmission project namely "Common Transmission System for evacuation of power from Lakadia (PhaseII: 7.5GW), Jam Khambhaliya (Phase-II: 5.5GW) and Jamnagar (Phase-I: 1GW) - Part-B" to be implemented through tariff based competitive bidding process.

Sl. No.	Clause No.	Existing Clause	New/Revised Clause
1	Specific Technical Requirements for Transmission Lines Cl. No. A.20.0 of RFP & TSA	A.20.0 Routing of transmission line through protected areas of India shall be avoided to the extent possible. In case, it is not possible to avoid protected areas, the towers of the transmission line up to 400 kV level, which are installed in protected areas shall be designed for Multicircuit (4 circuits) configuration of same voltage level considering reliability level of at least two (2). The top two circuits of these multi-circuit towers shall be used for stringing of the transmission line under present scope and the bottom two circuits shall be made available for stringing of any future transmission line of any transmission service providers/ State transmission utilities/Central transmission utilities passing through the same protected area. Further, the configuration and coordinates of such transmission towers shall be submitted to CEA, CTU and BPC by the TSP.	A.20.0 (a) Routing of transmission line through protected areas of India shall be avoided to the extent possible. In case, it is not possible to avoid protected areas, the towers of the transmission line up to 765 kV level, which are installed in protected areas, shall be designed for Multi-circuit (4-circuits) configuration of same voltage level considering the reliability level of at least TWO (2) in case of 400 kV and THREE (3) in case of 765 kV. The top two circuits of these multi-circuit towers shall be used for stringing of the transmission line under present scope and the bottom two circuits shall be made available for stringing of any future transmission line of any transmission service providers/ State transmission utilities/Central transmission utilities passing through the same protected area. Further, the configuration and coordinates of such transmission towers shall be submitted to CEA, CTU and BPC by the TSP. It shall be ensured that Minimum ground clearance is maintained such that statutory Electrical Clearances and Electric Field limit of 10 kV/m at 1 m and 1.8 m from ground level are not violated. A.20.0 (b) Routing of transmission lines through all Metropolitan areas, Municipal Corporations, Municipalities, Nagar Panchayats, and all Urban Planning areas notified by State Governments and Forest areas notified by Ministry of Environment, Forest, and Climate Change (MoEFCC) shall be avoided to the extent possible. However, if it is not possible to avoid these areas, then

Sl. No.	Clause No.	Existing Clause	New/Revised Clause
			in order to optimize Right of Way (RoW) in these areas, for up to 765 kV transmission lines, Double Circuit Pole Structures designed with reliability level of THREE (3) (preferably with insulated cross arm) shall be implemented. It shall also be ensured that Minimum ground clearance is maintained such that statutory Electrical Clearances and Electric Field limit of 10 kV/m at 1 m and 1.8 m from ground level are not violated. In case of more than TWO parallel Circuits up to 400 kV, the same shall be accommodated using Pole Structures designed for so many Circuits.

Amendment-III dated 22.06.2026 to the RFP Documents for Selection of Bidder as Transmission Service Provider to establish Inter-State Transmission system for "Common Transmission System for evacuation of power from Lakadia (Phase-II: 7.5GW), Jam Khambhaliya (Phase-II: 5.5GW) and Jamnagar (Phase-I: 1GW) - Part-B" through tariff based competitive bidding process.

Sr. No.	Clause No.	Existing Clause	New/Revised Clause
1.	Specific Technical Requirements for Transmission Lines Cl. No. A.20 of RFP & TSA	A.20.(a) Routing of transmission line through protected areas of India shall be avoided to the extent possible. In case, it is not possible to avoid protected areas, the towers of the transmission line up to 765 kV level, which are installed in protected areas, shall be designed for Multi-circuit (4-circuits) configuration of same voltage level considering the **reliability level of at least TWO (2) in case of 400 kV and THREE (3) in case of 765 kV**. The top two circuits of these multi-circuit towers shall be used for stringing of the transmission line under present scope and the bottom two circuits shall be made available for stringing of any future transmission line of any transmission service providers/ State transmission utilities/Central transmission utilities passing through the same protected area. Further, the configuration and coordinates of such transmission towers shall be submitted to CEA, CTU and BPC by the TSP. It shall be ensured that Minimum ground clearance is maintained such that statutory Electrical Clearances and Electric Field limit of 10 kV/m at 1 m and 1.8 m from ground level are not violated.	A.20.(a) Routing of transmission line through protected areas of India shall be avoided to the extent possible. In case, it is not possible to avoid protected areas, the towers of the transmission line up to 765 kV level, which are installed in protected areas, shall be designed for Multi-circuit (4-circuits) configuration of same voltage level considering the **Reliability Level and Design Span as per CEA (Technical standards for construction of Electrical Plants and Electric Lines) Regulations 2022, as amended from time to time.** The top two circuits of these multi-circuit towers shall be used for stringing of the transmission line under present scope and the bottom two circuits shall be made available for stringing of any future transmission line of any transmission service providers/ State transmission utilities/Central transmission utilities passing through the same protected area. Further, the configuration and coordinates of such transmission towers shall be submitted to CEA, CTU and BPC by the TSP. It shall be ensured that Minimum ground clearance is maintained such that statutory Electrical Clearances and Electric Field limit of 10 kV/m at 1 m and 1.8 m from ground level are not violated.
		A.20.(b) Routing of transmission lines through all Metropolitan areas, Municipal Corporations, Municipalities, Nagar Panchayats, and all Urban	A20.(b) Routing of transmission lines through all Metropolitan areas, Municipal Corporations, Municipalities, Nagar Panchayats, and all Urban

Sr. No.	Clause No.	Existing Clause	New/Revised Clause
		Planning areas notified by State Governments and Forest areas notified by Ministry of Environment, Forest, and Climate Change (MoEFCC) shall be avoided to the extent possible. However, if it is not possible to avoid these areas, then in order to optimize Right of Way (RoW) **in these areas, for up to 765 kV transmission lines, Double Circuit Pole Structures designed with reliability level of THREE (3)** (preferably with insulated cross arm) shall be implemented. It shall also be ensured that Minimum ground clearance is maintained such that statutory Electrical Clearances and Electric Field limit of 10 kV/m at 1 m and 1.8 m from ground level are not violated. In case of more than TWO parallel Circuits up to 400 kV, the same shall be accommodated using Pole Structures designed for so many Circuits.	Planning areas notified by State Governments and Forest areas notified by the Ministry of Environment, Forest and Climate Change (MoEFCC), shall be avoided to the extent possible. However, if it is not possible to avoid these areas, then, in order to optimize Right of Way (RoW) **in all Metropolitan areas, Municipal Corporations, Municipalities, Nagar Panchayats, and all Urban Planning areas notified by State Governments, for up to 765 kV transmission lines, Double Circuit Pole Structures designed with a Reliability Level and Design Span as per CEA (Technical Standards for Construction of Electrical Plants and Electric Lines) Regulations, 2022, as amended from time to time** (preferably with insulated cross arms) shall be implemented. It shall also be ensured that Minimum ground clearance is maintained such that statutory Electrical Clearances and Electric Field limit of 10 kV/m at 1 m and 1.8 m from ground level are not violated. In case of more than TWO parallel Circuits up to 400 kV, the same shall be accommodated using Pole Structures designed for so many Circuits.

Amendment-IV dated 06.07.2026 to the RFP Documents for selection of bidder as Transmission Service Provider to establish Inter-State Transmission system for "Common Transmission System for evacuation of power from Lakadia (Phase-II: 7.5GW), Jam Khambhaliya (Phase-II: 5.5GW) and Jamnagar (Phase-I: 1GW) - Part-B" through tariff based competitive bidding process.

<table>
<tr><th>Sl. No.</th><th>Clause No.</th><th>Existing Clause</th><th>New/Revised Clause</th></tr>
<tr><td>1</td><td>2.7.1 of RFP</td><td>The Bidders should submit the Bids online through the electronic bidding platform before the Bid Deadline i.e., on or before 1600 hours (IST) on 06.07.2026. In addition to the online submission, the Bidder with lowest Final Offer will be required to submit original hard copies of Annexure 3, Annexure 4 (if applicable), Annexure 6 (if applicable) and Annexure 14/14A/14B before issuance of LoI.</td><td>The Bidders should submit the Bids online through the electronic bidding platform before the Bid Deadline i.e., on or before 1600 hours (IST) on 21.07.2026. In addition to the online submission, the Bidder with lowest Final Offer will be required to submit original hard copies of Annexure 3, Annexure 4 (if applicable), Annexure 6 (if applicable) and Annexure 14/14A/14B before issuance of LoI.</td></tr>
<tr><td>2</td><td>2.7.2 of RFP</td><td>Important timelines are mentioned below:
<table>
<tr><th>Date</th><th>Event</th></tr>
<tr><td>06.07.2026</td><td>Submission of Bid (Online submission of Bid through electronic bidding portal)</td></tr>
<tr><td>06.07.2026</td><td>Opening of Technical Bid</td></tr>
<tr><td>14.07.2026</td><td>Short listing and announcement of Qualified Bidders on bidding portal</td></tr>
<tr><td>15.07.2026</td><td>Opening of Financial Bid - Initial Offer</td></tr>
<tr><td>16.07.2026</td><td>Electronic reverse auction (Financial Bid – Final Offer) for the Qualified Bidders.</td></tr>
<tr><td>21.07.2026</td><td>Submission of original hard copies of Annexure 3, Annexure 4, Annexure 6, as applicable and Annexure 14/14A/14B by the bidder with lowest Final Offer</td></tr>
<tr><td>24.07.2026</td><td>Selection of Successful Bidder and issue of LOI</td></tr>
<tr><td>03.08.2026</td><td>Signing of RFP Project Documents and transfer of JAM KHAMBHALIYA JAMNAGAR POWER TRANSMISSION LIMITED</td></tr>
</table></td><td>Important timelines are mentioned below:
<table>
<tr><th>Date</th><th>Event</th></tr>
<tr><td>21.07.2026</td><td>Submission of Bid (Online submission of Bid through electronic bidding portal)</td></tr>
<tr><td>21.07.2026</td><td>Opening of Technical Bid</td></tr>
<tr><td>29.07.2026</td><td>Short listing and announcement of Qualified Bidders on bidding portal</td></tr>
<tr><td>30.07.2026</td><td>Opening of Financial Bid - Initial Offer</td></tr>
<tr><td>31.07.2026</td><td>Electronic reverse auction (Financial Bid – Final Offer) for the Qualified Bidders.</td></tr>
<tr><td>05.08.2026</td><td>Submission of original hard copies of Annexure 3, Annexure 4, Annexure 6, as applicable and Annexure 14/14A/14B by the bidder with lowest Final Offer</td></tr>
<tr><td>10.08.2026</td><td>Selection of Successful Bidder and issue of LOI</td></tr>
<tr><td>20.08.2026</td><td>Signing of RFP Project Documents and transfer of JAM KHAMBHALIYA JAMNAGAR POWER TRANSMISSION LIMITED</td></tr>
</table></td></tr>
<tr><td>3</td><td>2.13.1 of RFP</td><td>.....
Opening of Envelope (Technical Bid): 1630 hours (IST) on 06.07.2026
.....
Opening of Initial Offer: Initial Offer shall be opened by the Bid Opening Committee in presence of the Bid Evaluation Committee at 1630 hours (IST) on 15.07.2026 in the office of CEA.</td><td>.....
Opening of Envelope (Technical Bid): 1630 hours (IST) on 21.07.2026
.....
Opening of Initial Offer: Initial Offer shall be opened by the Bid Opening Committee in presence of the Bid Evaluation Committee at 1630 hours (IST) on 30.07.2026 in the office of CEA.</td></tr>
</table>

Amendment-V dated 08.07.2026 to the RFP Documents for Selection of Bidder as Transmission Service Provider to establish Inter-State Transmission system for "Common Transmission System for evacuation of power from Lakadia (Phase-II: 7.5GW), Jam Khambhaliya (Phase-II: 5.5GW) and Jamnagar (Phase-I: 1GW) - Part-B" through tariff based competitive bidding process.

<table>
<tr><th>Sl. No.</th><th>Clause No.</th><th>Existing Clause</th><th>New/Revised Clause</th></tr>
<tr><td>1.</td><td>RFP & TSA

SPECIFIC TECHNICAL REQUIREMENTS FOR SUBSTATION</td><td>Extension of proposed Pimpalgaon S/s shall be conventional <u>Air Insulated Substation (AIS)</u> type conforming to the requirements of CEA (Technical Standards for Construction of Electrical Plants and Electric Lines) Regulations 2022, as amended from time to time.</td><td>Extension of proposed Pimpalgaon S/s shall be conventional <u>Gas Insulated Substation (GIS)</u> type conforming to the requirements of CEA (Technical Standards for Construction of Electrical Plants and Electric Lines) Regulations 2022, as amended from time to time.</td></tr>
<tr><td>2.</td><td>RFP & TSA

SPECIFIC TECHNICAL REQUIREMENTS FOR SUBSTATION in RFP & TSA

Clause B.5 EXTENSION OF EXISTING SUBSTATION</td><td>The following drawings/details of existing substation are attached with the RfP documents for further engineering by the bidder.
<table>
<tr><th>Sl. No.</th><th>Drawing Title</th><th>Drawing No./Details</th><th>Rev. No.</th></tr>
<tr><td>A.</td><td colspan="3">765kV South Olpad (GIS) S/s</td></tr>
<tr><td>1.0</td><td>Single Line Diagram</td><td>508SLP-KEC-GIS-E-DW-4000</td><td>R6</td></tr>
<tr><td>….</td><td>….</td><td></td><td></td></tr>
<tr><td>….</td><td>….</td><td></td><td></td></tr>
<tr><td>B.</td><td colspan="3">400 kV Pimpalgaon S/s</td></tr>
<tr><td>1.0</td><td>Single Line Diagram</td><td>PSLD/PRJ30/PG/001</td><td>R0</td></tr>
<tr><td>2.0</td><td>General Arrangement</td><td>ELP/PRJ30/PG/002</td><td>R2</td></tr>
<tr><td>3.0</td><td><u>Earthmat Layout</u></td><td></td><td></td></tr>
<tr><td>4.0</td><td>Visual Monitoring System</td><td></td><td></td></tr>
<tr><td>5.0</td><td>Bus Bar Protection</td><td></td><td></td></tr>
<tr><td>6.0</td><td>Substation Automation System (SAS)</td><td></td><td></td></tr>
</table></td><td>The following drawings/details of existing substation are attached with the RfP documents for further engineering by the bidder.
<table>
<tr><th>Sl. No.</th><th>Drawing Title</th><th>Drawing No./Details</th><th>Rev. No.</th></tr>
<tr><td>A.</td><td colspan="3">765kV South Olpad (GIS) S/s</td></tr>
<tr><td>1.0</td><td>Single Line Diagram</td><td>508SLP-KEC-GIS-E-DW-4000</td><td>R6</td></tr>
<tr><td>….</td><td>….</td><td></td><td></td></tr>
<tr><td>….</td><td>….</td><td></td><td></td></tr>
<tr><td>B.</td><td colspan="3">400 kV Pimpalgaon S/s</td></tr>
<tr><td>1.0</td><td>Single Line Diagram</td><td>PSLD/PRJ30/PG/001</td><td>R0</td></tr>
<tr><td>2.0</td><td>General Arrangement</td><td>ELP/PRJ30/PG/002</td><td>R2</td></tr>
<tr><td>3.0</td><td><u>Earthmat Layout</u></td><td><u>EARTH GRID/PRJ-30/PG/019</u></td><td><u>R0</u></td></tr>
<tr><td>4.0</td><td>Visual Monitoring System</td><td></td><td></td></tr>
<tr><td>5.0</td><td>Bus Bar Protection</td><td></td><td></td></tr>
<tr><td>6.0</td><td>Substation Automation System (SAS)</td><td></td><td></td></tr>
</table></td></tr>
</table>

<table>
<tr><th>Sl. No.</th><th>Clause No.</th><th>Existing Clause</th><th>New/Revised Clause</th></tr>
<tr><td>1.</td><td>Scope of the Transmission Scheme in RFP & TSA</td><td>
<table>
<tr><th>Sl. No.</th><th>Scope of the Transmission Scheme</th><th>Scheduled COD in months from Effective Date</th></tr>
<tr><td>1.</td><td>.....</td><td rowspan="6">36 months</td></tr>
<tr><td>2.</td><td>...</td></tr>
<tr><td>3.</td><td>...</td></tr>
<tr><td>4.</td><td>...</td></tr>
<tr><td>5.</td><td>Nasik – Pimpalgaon (MSETCL) 400kV D/c line (Quad ACSR/AAAC/AL59 moose equivalent) <u>(Line to be routed from near Sinner TPP / Raymond i.e. from eastern side of Nasik)</u>.</td></tr>
<tr><td>6.</td><td>2 Nos. 400 kV line bays at Pimpalgaon S/s for Nasik – Pimpalgaon (MSETCL) 400 kV D/C line (Quad ACSR/AAAC/AL59 moose equivalent)
• 400 kV line bays – 2 Nos.</td></tr>
</table>
Note:
a) Bay(s) required for completion of diameter (GIS) in one-and-half breaker scheme shall also be executed by the TSP.
b) TSP of South Olpad (GIS) to provide space for above scope of work (Free of cost)
c) MSETCL to provide space for above scope of work at Pimpalgaon S/s (Free of cost)
d) MSETCL to implement 220kV downstream system from Nasik S/s in matching time-frame.
</td><td>
<table>
<tr><th>Sl. No.</th><th>Scope of the Transmission Scheme</th><th>Scheduled COD in months from Effective Date</th></tr>
<tr><td>1.</td><td>.....</td><td rowspan="6">36 months</td></tr>
<tr><td>2.</td><td>...</td></tr>
<tr><td>3.</td><td>...</td></tr>
<tr><td>4.</td><td>...</td></tr>
<tr><td>5.</td><td>Nasik – Pimpalgaon (MSETCL) 400 kV D/c line (Quad ACSR/AAAC/AL59 moose equivalent)</td></tr>
<tr><td>6.</td><td>2 Nos. 400 kV line bays at Pimpalgaon <u>(GIS)</u> S/s for Nasik – Pimpalgaon (MSETCL) 400 kV D/C line (Quad ACSR/AAAC/AL59 moose equivalent)
• 400 kV <u>GIS</u> line bays – 2 Nos.</td></tr>
</table>
Note:
a) Bay(s) required for completion of diameter (GIS) in one-and-half breaker scheme shall also be executed by the TSP.
b) TSP of South Olpad (GIS) to provide space for above scope of work (Free of cost)
c) MSETCL to provide space for above scope of work at Pimpalgaon <u>(GIS)</u> S/s (Free of cost)
d) MSETCL to implement 220kV downstream system from Nasik S/s in matching time-frame.
</td></tr>
</table>

<table>
<tr><th>Sl. No.</th><th>Clause No.</th><th>Existing Clause</th><th>New/Revised Clause</th></tr>
<tr><td>2.</td><td>Clause 2.6 of RFP, Annexure-8 of RFP

Schedule 2 and Schedule: 5 of TSA</td><td>
<table>
<tr><th>Sl. No.</th><th>Name of the Transmission Element</th><th>Scheduled COD</th><th>% of Quoted Transmission Charges recoverable on Scheduled COD of the Element of the Project</th><th>Element(s) which are prerequired for declaring the commercial operation (COD) of the respective Element</th></tr>
<tr><td>1.</td><td>.....</td><td rowspan="6">36 months</td><td rowspan="6">100%</td><td rowspan="6">All the elements are required simultaneously to ensure their utilization</td></tr>
<tr><td>2.</td><td>...</td></tr>
<tr><td>3.</td><td>...</td></tr>
<tr><td>4.</td><td>...</td></tr>
<tr><td>5.</td><td>Nasik – Pimpalgaon (MSETCL) 400kV D/c line (Quad ACSR/AAAC/AL59 moose equivalent) <u>(Line to be routed from near Sinner TPP / Raymond i.e. from eastern side of Nasik)</u>.</td></tr>
<tr><td>6.</td><td>2 Nos. 400 kV line bays at Pimpalgaon S/s for Nasik – Pimpalgaon (MSETCL) 400 kV D/C line (Quad ACSR/AAAC/AL59 moose equivalent)</td></tr>
</table>
.....
</td><td>
<table>
<tr><th>Sl. No.</th><th>Name of the Transmission Element</th><th>Scheduled COD</th><th>% of Quoted Transmission Charges recoverable on Scheduled COD of the Element of the Project</th><th>Element(s) which are prerequired for declaring the commercial operation (COD) of the respective Element</th></tr>
<tr><td>1.</td><td>.....</td><td rowspan="6">36 months</td><td rowspan="6">100%</td><td rowspan="6">All the elements are required simultaneously to ensure their utilization</td></tr>
<tr><td>2.</td><td>...</td></tr>
<tr><td>3.</td><td>...</td></tr>
<tr><td>4.</td><td>...</td></tr>
<tr><td>5.</td><td>Nasik – Pimpalgaon (MSETCL) 400 kV D/c line (Quad ACSR/AAAC/AL59 moose equivalent)</td></tr>
<tr><td>6.</td><td>2 Nos. 400 kV line bays at Pimpalgaon <u>(GIS)</u> S/s for Nasik –Pimpalgaon (MSETCL) 400 kV D/C line (Quad ACSR/AAAC/AL59 moose equivalent)</td></tr>
</table>
.....
</td></tr>
</table>

Sl. No.	Clause No.	Existing Clause	New/Revised Clause
3.	B.1.1 Insulation Coordination RFP & TSA	The system design parameters for substations/switchyards shall be as given below:	The system design parameters for substations/switchyards shall be as given below: .....

Existing Clause

Sl. No.	Description of parameters	765 kV South Olpad S/s (GIS)	400 kV Pimpalgaon S/s (AIS)
		765 kV System	400 kV System
1.	System Operating Voltage	765 kV	400 kV
2.	Maximum voltage of the system (rms)	800 kV	420 kV
3.	Rated Frequency	50 Hz	50 Hz
4.	No. of Phases	3	3
5.	Rated Insulation Levels		
i)	Lightning Impulse withstand voltage for (1.2/50 micro sec.) - for Equipment other than Transformer and Reactor - for Insulator String	2100 kVp 2100 kVp	1425 kVp 1550 kVp
ii)	Switching Impulse withstand voltage (250/2500 micro sec.) dry and wet	1425 kVp (for GIS) 1550 kVp (for AIS)	1050 kVp
iii)	One minute power frequency dry withstand voltage (rms)	960 kV (for GIS) 830 kV (for AIS)	**630 kV**
iv)	**One minute power frequency dry and wet withstand voltage (rms)**	--	--
6.	Corona Extinction Voltage	508 kV	320 kV

New/Revised Clause

Sl. No.	Description of parameters	765 kV South Olpad S/s (GIS)	400 kV Pimpalgaon S/s (GIS)
		765 kV System	400 kV System
1.	System Operating Voltage	765 kV	400 kV
2.	Maximum voltage of the system (rms)	800 kV	420 kV
3.	Rated Frequency	50 Hz	50 Hz
4.	No. of Phases	3	3
5.	Rated Insulation Levels		
i)	Lightning Impulse withstand voltage for (1.2/50 micro sec.) - for Equipment other than Transformer and Reactor - for Insulator String	2100 kVp 2100 kVp	1425 kVp 1550 kVp
ii)	Switching Impulse withstand voltage (250/2500 micro sec.) dry and wet	1425 kVp (for GIS) 1550 kVp (for AIS)	1050 kVp
iii)	One minute power frequency dry withstand voltage (rms)	960 kV (for GIS) 830 kV (for AIS)	**650 kV (for GIS) 630 kV (for AIS)**
6.	Corona Extinction Voltage	508 kV	320 kV
7.	Max. radio interference voltage for frequency between 0.5 MHz and 2 MHz	2500 micro-volts at 508 kV rms	1000 micro-volts at 266 kV rms

<table>
<tr><th>Sl. No.</th><th>Clause No.</th><th>Existing Clause</th><th>New/Revised Clause</th></tr>
<tr><td></td><td></td><td>
<table>
<tr><td>7.</td><td>Max. radio interference voltage for frequency between 0.5 MHz and 2 MHz</td><td>2500 micro-volts at 508 kV rms</td><td>1000 micro-volts at 266 kV rms</td></tr>
<tr><td>8.</td><td>Minimum creepage distance for insulator string/ longrod insulators/ outdoor bushings</td><td>24800 mm (31mm/kV)</td><td>13020 mm (31 mm/kV)</td></tr>
<tr><td>9.</td><td>Minimum creepage distance for switchyard equipment</td><td>24800 mm (31mm/kV)</td><td>10500 mm (25 mm/kV)</td></tr>
<tr><td>10.</td><td>Max. Fault Current</td><td>50 kA</td><td>63 kA</td></tr>
<tr><td>11.</td><td>Duration of Fault</td><td>1 sec</td><td>1 sec</td></tr>
</table>
</td><td>
<table>
<tr><td>8.</td><td>Minimum creepage distance for insulator string/ longrod insulators/ outdoor bushings</td><td>24800 mm (31mm/kV)</td><td>13020 mm (31 mm/kV)</td></tr>
<tr><td>9.</td><td>Minimum creepage distance for switchyard equipment</td><td>24800 mm (31mm/kV)</td><td>10500 mm (25 mm/kV)</td></tr>
<tr><td>10.</td><td>Max. Fault Current</td><td>50 kA</td><td>63 kA</td></tr>
<tr><td>11.</td><td>Duration of Fault</td><td>1 sec</td><td>1 sec</td></tr>
</table>
</td></tr>
<tr><td>4.</td><td>B.1.2 Switching Scheme

RFP & TSA</td><td>
The switching schemes, as mentioned below, shall be adopted at various voltage levels of substation/switchyard.
<table>
<tr><th>Substation</th><th>765 kV side</th><th>400 kV side</th><th>220 kV side</th></tr>
<tr><td>765/400/220 kV Nasik (AIS)</td><td>One and Half breaker</td><td>One and Half breaker</td><td>Double Main and Transfer</td></tr>
<tr><td>765 kV South Olpad S/s (GIS)</td><td>One and Half breaker</td><td>------</td><td>-----</td></tr>
<tr><td><u>400 kV Pimpalgaon S/s (AIS)</u></td><td>------</td><td><u>As per existing</u></td><td>-----</td></tr>
</table>
</td><td>
The switching schemes, as mentioned below, shall be adopted at various voltage levels of substation/switchyard.
<table>
<tr><th>Substation</th><th>765 kV side</th><th>400 kV side</th><th>220 kV side</th></tr>
<tr><td>765/400/220 kV Nasik (AIS)</td><td>One and Half breaker</td><td>One and Half breaker</td><td>Double Main and Transfer</td></tr>
<tr><td>765 kV South Olpad S/s (GIS)</td><td>One and Half breaker</td><td>------</td><td>-----</td></tr>
<tr><td><u>400 kV Pimpalgaon S/s (GIS)</u></td><td>------</td><td><u>Double Bus Scheme</u></td><td>-----</td></tr>
</table>
</td></tr>
<tr><td>5.</td><td>B.2.5 765 kV GIS equipment

RFP & TSA</td><td>
B.2.5 765 kV GIS equipment

GIS (Gas Insulated Switchgear) shall be Indoor type in accordance to IEC: 62271-203. The switchgear shall be designed and specified to withstand operating conditions and duty requirements. All the switchgear such as Circuit Breaker, isolator, earth switch including CT, PT etc. shall be GIS type. The Surge Arrestor and Voltage Transformer shall be either GIS or outdoor AIS type.
.....
</td><td>
B.2.5 765 kV and <u>400 kV</u> GIS equipment

GIS (Gas Insulated Switchgear) shall be Indoor type in accordance to IEC: 62271-203. The switchgear shall be designed and specified to withstand operating conditions and duty requirements. All the switchgear such as Circuit Breaker, isolator, earth switch including CT, PT etc. shall be GIS type. The Surge Arrestor and Voltage Transformer shall be either GIS or outdoor AIS type.
.....
</td></tr>
</table>

Sl. No.	Clause No.	Existing Clause	New/Revised Clause
6.	B.2.5.1 Circuit Breakers (GIS) RFP & TSA	**B.2.5.1 Circuit Breakers (GIS)** GIS Circuit breakers shall in general be of C2-M2 class and comply to IEC-62271-100. The rated break time shall not exceed 40 ms (milli second) for 765 kV. Circuit breakers shall be suitable for single phase and three phase auto reclosing. Each breaker would have two sets of trip circuits which would be connected to separate DC supplies for greater reliability. The Circuit breakers controlling 765 kV lines shall be provided with pre-insertion closing resistor of about 450 ohms with 9 ms insertion time or Controlled Switching Device (CSD). The short line fault capacity shall be the same as the rated capacity and this is proposed to be achieved without use of opening resistors. Controlled switching device shall be provided in the Circuit Breaker of the switchable line reactor bay and in Main and Tie bay circuit breakers of line with non-switchable line reactors, Bus reactors and Transformers for 400 kV and above voltage class.	**B.2.5.1 Circuit Breakers (GIS)** GIS Circuit breakers shall in general be of C2-M2 class and comply to IEC-62271-100. The rated break time shall not exceed 40 ms (milli second) for 765 kV **and 400 kV**. Circuit breakers shall be suitable for single phase and three phase auto reclosing. Each breaker would have two sets of trip circuits which would be connected to separate DC supplies for greater reliability. The Circuit breakers controlling 765 kV lines shall be provided with pre-insertion closing resistor of about 450 ohms with 9 ms insertion time or Controlled Switching Device (CSD). **The Circuit breakers controlling 400 kV lines wherever required shall be provided with pre-insertion closing resistor of about 400 ohms with 8 ms insertion time or Controlled Switching Device (CSD) for lines longer than 200 km**. The short line fault capacity shall be the same as the rated capacity and this is proposed to be achieved without use of opening resistors. Controlled Switching Device shall be provided in the Circuit Breaker of the switchable line reactor bay and in Main and Tie bay circuit breakers of line with non-switchable line reactors, Bus reactors and Transformers for 400 kV and above voltage class.
7.	B.2.5.3 Current Transformers (GIS) RFP & TSA	**B.2.5.3 Current Transformers (GIS)** ..... The instrument security factor shall be less than 10 for CTs of 765 kV voltage class.	**B.2.5.3 Current Transformers (GIS)** ..... The instrument security factor shall be **less than Five (5) for CTs up to 400 kV voltage class and** less than 10 for CTs of 765 kV voltage class.

Sl. No.	Clause No.	Existing Clause	New/Revised Clause
8.	B.2.5.5 Surge Arresters (GIS) (if applicable) RFP & TSA	**B.2.5.5 Surge Arresters (GIS) (if applicable)** 624 kV Station High (SH) duty gapless type Surge arresters with thermal energy (Wth) of minimum 13 kJ/kV shall be provided for 800 kV system conforming to IEC 60099-4 in general. Other characteristics of Surge arrester shall be chosen in accordance with system requirements. Surge arrest¬ers shall be provided at line entrances, near Transformers and reactors so as to achieve proper insulation coordination. A leakage current monitor with surge counter shall be provided with each surge arrester.	**B.2.5.5 Surge Arresters (GIS) (if applicable)** 624 kV Station High (SH) duty **and 336 kV Station High (SH) duty** gapless type Surge arresters with thermal energy (Wth) of minimum 13 kJ/kV **and 12 kJ/kV respectively** shall be provided for 800 kV **and 420 kV** system **respectively** conforming to IEC 60099-4 in general. Other characteristics of Surge arrester shall be chosen in accordance with system requirements. Surge arresters shall be provided at line entrances, near Transformers and Reactors so as to achieve proper insulation coordination. A leakage current monitor with surge counter shall be provided with each surge arrester.
9.	B.2.5.6 SF6 to Air Bushing RFP & TSA	**B.2.5.6 SF_6 to Air Bushing** Outdoor bushings, for the connection of conventional external conductors to the SF_6 metal enclosed switchgear, shall be provided. Bushings shall generally be in accordance with the requirements of IEC-60137. The creepage distance over the external surface of outdoor bushings shall not be less than 31 mm/ kV SF_6 to air Bushing shall be of Polymer/ composite type and shall be robust and designed for adequate cantilever strength to meet the requirement of seismic conditions. The electrical and mechanical characteristics of bushings shall be in accordance with IEC-60137. Polymer/composite insulator shall be seamless sheath of silicon rubber compound. The housing and weather sheds should have silicon content of minimum **30%** by weight. It should protect the bushing against environmental influences, external pollution and humidity. The hollow silicon composite insulators shall comply with the requirements of IEC 61462 and the relevant parts of IEC-62217.	**B.2.5.6 SF_6 to Air Bushing** Outdoor bushings, for the connection of conventional external conductors to the SF_6 metal enclosed switchgear, shall be provided. Bushings shall generally be in accordance with the requirements of IEC-60137. The creepage distance over the external surface of outdoor bushings shall not be less than 31 mm/ kV. SF_6 to air Bushing shall be of Polymer/ composite type and shall be robust and designed for adequate cantilever strength to meet the requirement of seismic conditions. The electrical and mechanical characteristics of bushings shall be in accordance with IEC-60137. Polymer/composite insulator shall be seamless sheath of silicon rubber compound. The housing and weather sheds should have silicon content of minimum **32%** by weight. It should protect the bushing against environmental influences, external pollution and humidity. The hollow silicon composite insulators shall comply with the requirements of IEC 61462 and the relevant parts of IEC-62217.

Amendment-VII dated 20.07.2026 to the RFP Documents for selection of bidder as Transmission Service Provider to establish Inter-State Transmission project namely "Common Transmission System for evacuation of power from Lakadia (Phase-II: 7.5GW), Jam Khambhaliya (Phase-II: 5.5GW) and Jamnagar (Phase-I: 1GW) - Part-B" to be implemented through tariff based competitive bidding process.

<table>
<tr><th>Sl. No.</th><th>Clause No.</th><th>Existing Clause</th><th>New/Revised Clause</th></tr>
<tr><td>1</td><td>2.7.1 of RFP</td><td>The Bidders should submit the Bids online through the electronic bidding platform before the Bid Deadline i.e., on or before 1600 hours (IST) on <u>21.07.2026</u>. In addition to the online submission, the Bidder with lowest Final Offer will be required to submit original hard copies of Annexure 3, Annexure 4 (if applicable), Annexure 6 (if applicable) and Annexure 14/14A/14B before issuance of LoI.</td><td>The Bidders should submit the Bids online through the electronic bidding platform before the Bid Deadline i.e., on or before 1600 hours (IST) on <u>29.07.2026</u>. In addition to the online submission, the Bidder with lowest Final Offer will be required to submit original hard copies of Annexure 3, Annexure 4 (if applicable), Annexure 6 (if applicable) and Annexure 14/14A/14B before issuance of LoI.</td></tr>
<tr><td>2</td><td>2.7.2 of RFP</td><td>Important timelines are mentioned below:
<table>
<tr><th>Date</th><th>Event</th></tr>
<tr><td><u>21.07.2026</u></td><td>Submission of Bid (Online submission of Bid through electronic bidding portal)</td></tr>
<tr><td><u>21.07.2026</u></td><td>Opening of Technical Bid</td></tr>
<tr><td><u>29.07.2026</u></td><td>Short listing and announcement of Qualified Bidders on bidding portal</td></tr>
<tr><td><u>30.07.2026</u></td><td>Opening of Financial Bid - Initial Offer</td></tr>
<tr><td><u>31.07.2026</u></td><td>Electronic reverse auction (Financial Bid – Final Offer) for the Qualified Bidders.</td></tr>
<tr><td><u>05.08.2026</u></td><td>Submission of original hard copies of Annexure 3, Annexure 4, Annexure 6, as applicable and Annexure 14/14A/4B by the bidder with lowest Final Offer</td></tr>
<tr><td><u>10.08.2026</u></td><td>Selection of Successful Bidder and issue of LOI</td></tr>
<tr><td><u>20.08.2026</u></td><td>Signing of RFP Project Documents and transfer of JAM KHAMBHALIYA JAMNAGAR POWER TRANSMISSION LIMITED</td></tr>
</table></td><td>Important timelines are mentioned below:
<table>
<tr><th>Date</th><th>Event</th></tr>
<tr><td><u>29.07.2026</u></td><td>Submission of Bid (Online submission of Bid through electronic bidding portal)</td></tr>
<tr><td><u>29.07.2026</u></td><td>Opening of Technical Bid</td></tr>
<tr><td><u>06.08.2026</u></td><td>Short listing and announcement of Qualified Bidders on bidding portal</td></tr>
<tr><td><u>10.08.2026</u></td><td>Opening of Financial Bid - Initial Offer</td></tr>
<tr><td><u>11.08.2026</u></td><td>Electronic reverse auction (Financial Bid – Final Offer) for the Qualified Bidders.</td></tr>
<tr><td><u>14.08.2026</u></td><td>Submission of original hard copies of Annexure 3, Annexure 4, Annexure 6, as applicable and Annexure 14/14A/4B by the bidder with lowest Final Offer</td></tr>
<tr><td><u>19.08.2026</u></td><td>Selection of Successful Bidder and issue of LOI</td></tr>
<tr><td><u>31.08.2026</u></td><td>Signing of RFP Project Documents and transfer of JAM KHAMBHALIYA JAMNAGAR POWER TRANSMISSION LIMITED</td></tr>
</table></td></tr>
<tr><td>3</td><td>2.13.1 of RFP</td><td>…….

Opening of Envelope (Technical Bid): 1630 hours (IST) on <u>21.07.2026</u>
……..

Opening of Initial Offer: Initial Offer shall be opened by the Bid Opening Committee in presence of the Bid Evaluation Committee at 1630 hours (IST) on <u>30.07.2026</u> in the office of CEA.</td><td>…….

Opening of Envelope (Technical Bid): 1630 hours (IST) on <u>29.07.2026</u>
……..

Opening of Initial Offer: Initial Offer shall be opened by the Bid Opening Committee in presence of the Bid Evaluation Committee at 1630 hours (IST) on <u>10.08.2026</u> in the office of CEA.</td></tr>
</table>

Amendment-VIII dated 28.07.2026 to the RFP Documents for selection of bidder as Transmission Service Provider to establish Inter-State Transmission project namely "Common Transmission System for evacuation of power from Lakadia (Phase-II: 7.5GW), Jam Khambhaliya (Phase-II: 5.5GW) and Jamnagar (Phase-I: 1GW) - Part-B" to be implemented through tariff based competitive bidding process.

<table>
<tr><th>Sl. No.</th><th>Clause No.</th><th>Existing Clause</th><th>New/Revised Clause</th></tr>
<tr><td>1</td><td>2.7.1 of RFP</td><td>The Bidders should submit the Bids online through the electronic bidding platform before the Bid Deadline i.e., on or before 1600 hours (IST) on <u>29.07.2026</u>. In addition to the online submission, the Bidder with lowest Final Offer will be required to submit original hard copies of Annexure 3, Annexure 4 (if applicable), Annexure 6 (if applicable) and Annexure 14/14A/14B before issuance of LoI.</td><td>The Bidders should submit the Bids online through the electronic bidding platform before the Bid Deadline i.e., on or before 1600 hours (IST) on <u>05.08.2026</u>. In addition to the online submission, the Bidder with lowest Final Offer will be required to submit original hard copies of Annexure 3, Annexure 4 (if applicable), Annexure 6 (if applicable) and Annexure 14/14A/14B before issuance of LoI.</td></tr>
<tr><td>2</td><td>2.7.2 of RFP</td><td>Important timelines are mentioned below:
<table>
<tr><th>Date</th><th>Event</th></tr>
<tr><td><u>29.07.2026</u></td><td>Submission of Bid (Online submission of Bid through electronic bidding portal)</td></tr>
<tr><td><u>29.07.2026</u></td><td>Opening of Technical Bid</td></tr>
<tr><td><u>06.08.2026</u></td><td>Short listing and announcement of Qualified Bidders on bidding portal</td></tr>
<tr><td><u>10.08.2026</u></td><td>Opening of Financial Bid - Initial Offer</td></tr>
<tr><td><u>11.08.2026</u></td><td>Electronic reverse auction (Financial Bid – Final Offer) for the Qualified Bidders.</td></tr>
<tr><td><u>14.08.2026</u></td><td>Submission of original hard copies of Annexure 3, Annexure 4, Annexure 6, as applicable and Annexure 14/14A/4B by the bidder with lowest Final Offer</td></tr>
<tr><td><u>19.08.2026</u></td><td>Selection of Successful Bidder and issue of LOI</td></tr>
<tr><td><u>31.08.2026</u></td><td>Signing of RFP Project Documents and transfer of JAM KHAMBHALIYA JAMNAGAR POWER TRANSMISSION LIMITED</td></tr>
</table></td><td>Important timelines are mentioned below:
<table>
<tr><th>Date</th><th>Event</th></tr>
<tr><td><u>05.08.2026</u></td><td>Submission of Bid (Online submission of Bid through electronic bidding portal)</td></tr>
<tr><td><u>05.08.2026</u></td><td>Opening of Technical Bid</td></tr>
<tr><td><u>13.08.2026</u></td><td>Short listing and announcement of Qualified Bidders on bidding portal</td></tr>
<tr><td><u>17.08.2026</u></td><td>Opening of Financial Bid - Initial Offer</td></tr>
<tr><td><u>18.08.2026</u></td><td>Electronic reverse auction (Financial Bid – Final Offer) for the Qualified Bidders.</td></tr>
<tr><td><u>21.08.2026</u></td><td>Submission of original hard copies of Annexure 3, Annexure 4, Annexure 6, as applicable and Annexure 14/14A/4B by the bidder with lowest Final Offer</td></tr>
<tr><td><u>27.08.2026</u></td><td>Selection of Successful Bidder and issue of LOI</td></tr>
<tr><td><u>07.09.2026</u></td><td>Signing of RFP Project Documents and transfer of JAM KHAMBHALIYA JAMNAGAR POWER TRANSMISSION LIMITED</td></tr>
</table></td></tr>
<tr><td>3</td><td>2.13.1 of RFP</td><td>…….

Opening of Envelope (Technical Bid): 1630 hours (IST) on <u>29.07.2026</u>
……..

Opening of Initial Offer: Initial Offer shall be opened by the Bid Opening Committee in presence of the Bid Evaluation Committee at 1630 hours (IST) on <u>10.08.2026</u> in the office of CEA.</td><td>…….

Opening of Envelope (Technical Bid): 1630 hours (IST) on <u>05.08.2026</u>
……..

Opening of Initial Offer: Initial Offer shall be opened by the Bid Opening Committee in presence of the Bid Evaluation Committee at 1630 hours (IST) on <u>17.08.2026</u> in the office of CEA.</td></tr>
</table>

REC Power Development and Consultancy Limited
(A wholly owned subsidiary of REC Limited, a 'Maharatna CPSE'
under Ministry of Power, Govt. of India)

REC Power Development

Ref.:RECPDCL/TBCB/Lakadia_Phase_II &Lakadia_Part_B/2026-27/537 दिनांक: 07.05.2026

सेक्रेटरी,
केन्द्रीय विद्युत विनियामक आयोग,
6वीं, 7वीं और 8वीं मंजिल, टावर-बी, वर्ल्ड ट्रेड सेंटर
नौरोजी नगर, तीसरा नई दिल्ली – 110029

Subject: Global Invitation for selection of Transmission Service Provider to establish Transmission system for the projects namely "Common Transmission System for evacuation of power from Lakadia (Phase-II: 7.5GW), Jam Khambhaliya (Phase-II: 5.5GW) and Jamnagar (Phase-I: 1GW) - Part-B" & "Transmission system for Integration of Power from RE Projects in Lakadia REZ in Gujarat-Phase II (7500MW)" **-Copy of RFP documents.**

महोदय,

Kind reference is invited to the Gazette Notification No.CG-DL-E-19022026-270309 dated 12.02.2026, issued by Ministry of Power, Government of India wherein REC Power Development and Consultancy Limited has been appointed as Bid Process Coordinator (BPC) for selection of bidder as Transmission Service Provider to establish Inter-State transmission projects on Build, Own, Operate & Transfer (BOOT) basis.

In this regard, we would like to intimate that the RFP process for the subject cited projects have been initiated by way of Global Invitation in National/International newspapers i.e. Hindustan Times Package on 04.05.2026 & Financial Times Package on 07.05.2026. The important timelines in this regard are as below. :-

Sr. No.	Name of the Project	Last date of RFP Purchase	Last date for submission of response to RFP
1.	Common Transmission System for evacuation of power from Lakadia (Phase-II: 7.5GW), Jam Khambhaliya (Phase-II: 5.5GW) and Jamnagar (Phase-I: 1GW) - Part-B	03.07.2026	06.07.2026 up to 1500 Hrs (IST)
2.	Transmission system for Integration of Power from RE Projects in Lakadia REZ in Gujarat-Phase II (7500MW)	03.07.2026	06.07.2026 up to 1600 Hrs (IST)

The RfP notification and RfP document for the above projects have also been uploaded on our websites www.recindia.nic.in and www.recpdcl.in.

In this regard, copy of Request for Proposal (RfP), Transmission Service Agreement (TSA) and Share Purchase Agreement (SPA) along with copies of newspaper notification of the subject projects are enclosed herewith for your kind information and reference please.

धन्यवाद,

भवदीय,

(विजय कुलकर्णी)
वरिष्ठ महाप्रबंधक एवं विभागाध्यक्ष (टी & डी)

Heman t Singh Digitally signed by Hemant Singh Date: 2026.10.21 23:18:08 +05'30'

संलग्न: जैसा कि ऊपर बताया गया है

सत्यमेव जयते

GOVERNMENT OF INDIA
MINISTRY OF CORPORATE AFFAIRS

Central Registration Centre

Certificate of Incorporation

[Pursuant to sub-section (2) of section 7 and sub-section (1) of section 8 of the Companies Act, 2013 (18 of 2013) and rule 18 of the Companies (Incorporation) Rules, 2014]

I hereby certify that JAM KHAMBHALIYA JAMNAGAR POWER TRANSMISSION LIMITED is incorporated on this NINETH day of MAY TWO THOUSAND TWENTY SIX under the Companies Act, 2013 (18 of 2013) and that the company is Company limited by shares

The Corporate Identity Number of the company is **U42202DL2026GOI466346**

The Permanent Account Number (PAN) of the company is **AAHCJ4112C***

The Tax Deduction and Collection Account Number (TAN) of the company is **DELJ20615A***

Given under my hand at Manesar this NINETH day of MAY TWO THOUSAND TWENTY SIX

Certification signature by DS MINISTRY OF CORPORATE AFFAIRS , CRC MANESAR 2 <ROC.CRC@MCA.GOV.IN>, Validity Unknown

Digitally signed by
DS MINISTRY OF CORPORATE
AFFAIRS , CRC MANESAR 2
Date: 2026.05.09 12:49:35 IST

PUSULURU KIRAN

Assistant Registrar of Companies/ Deputy Registrar of Companies/ Registrar of Companies

For and on behalf of the Jurisdictional Registrar of Companies

Registrar of Companies

Central Registration Centre

Disclaimer: This certificate only evidences incorporation of the company on the basis of documents and declarations of the applicant(s). This certificate is neither a license nor permission to conduct business or solicit deposits or funds from public. Permission of sector regulator is necessary wherever required. Registration status and other details of the company can be verified on mca.gov.in

Mailing Address as per record available in Registrar of Companies office:

JAM KHAMBHALIYA JAMNAGAR POWER TRANSMISSION LIMITED

CORE-4, SCOPE COMPLEX, 7, LODHI ROAD, Lodi Road, New Delhi, South Delhi- 110003, Delhi

*as issued by Income tax Department

JAM KHAMBHALIYA JAMNAGAR POWER TRANSMISSION LIMITED
CIN: U42202DL2026GOI466346 | ***Email ID:*** *jamnagar@ceigall.com*
Registered Office: *Core-4, Scope Complex, 7, Lodhi Road, South Delhi, New Delhi, Delhi, India, 110003*

COPY OF RESOLUTION PASSED AT THE MEETING OF THE BOARD OF DIRECTORS OF JAM KHAMBHALIYA JAMNAGAR POWER TRANSMISSION LIMITED HELD ON THE 12TH DAY OF OCTOBER 2026 AT CORE-4, SCOPE COMPLEX, 7, LODHI ROAD, SOUTH DELHI, NEW DELHI, DELHI, INDIA, 110003

"**RESOLVED THAT** Mr. Chandan Singh, Director, Mr. Ayyalusamy Saravanan and Mr. Nawal Singh, Authorized Signatories of the Company be and are hereby severally authorized to sign and submit petitions, affidavits, agreements, declarations, undertakings, deeds, Bills and other documents in connection therewith or incidental thereto before Central Electricity Regulatory Commission (CERC) or Appellate Tribunal for Electricity (APTEL) or Regional Power Committees and Regional Load Dispatch Centers and other regulatory authorities for and on behalf of the Company.

RESOLVED FURTHER THAT the above Authorized Signatories be and are hereby further severally authorized:

(a) to issue notices, affidavit and other documents, communications to Long Term Transmission Customers and other Parties/ agencies.

(b) to file Petition, Affidavit, Notices and other documents before Regulatory Commission or other Electricity body, Appellate Tribunal for Electricity and Supreme Court for issues arising out of Transmission Service Agreement.

(c) to engage, appoint or remove any pleaders or advocates, and sign vakalatnamas, power of attorney for such engagement or appointment and (d) to file appeal and defend the interest of the Company.""

Certified True Copy
For **Jam Khambhaliya Jamnagar Power Transmission Limited**

Jam Khambhaliya Jamnagar Power Transmission Limited

Chandan Singh
Director
DIN: 10901481

Form No. INC-33

e-MOA (e-Memorandum of Association)
[Pursuant to Schedule I (see Sections 4 and 5) to the Companies Act, 2013)]

सत्यमेव जयते

Form language

(•) English ( ) Hindi

Refer instruction kit for filing the form

*All fields marked in * are mandatory*

*** Table applicable to company as notified under schedule I of the Companies Act, 2013**

(A - MEMORANDUM OF ASSOCIATION OF A COMPANY LIMITED BY SHARES
B - MEMORANDUM OF ASSOCIATION OF A COMPANY LIMITED BY GUARANTEE AND NOT HAVING A SHARE CAPITAL
C - MEMORANDUM OF ASSOCIATION OF A COMPANY LIMITED BY GUARANTEE AND HAVING A SHARE CAPITAL
D - MEMORANDUM OF ASSOCIATION OF AN UNLIMITED COMPANY AND NOT HAVING SHARE CAPITAL
E - MEMORANDUM OF ASSOCIATION OF AN UNLIMITED COMPANY AND HAVING SHARE CAPITAL)

A - MEMORANDUM OF ASSOCIATION OF A COMPANY LIMITED BY SHARES

Table A/B/C/D/E

1 The name of the company is

JAM KHAMBHALIYA JAMNAGAR POWER TRANSMISSION LIMITED

2 The registered office of the company will be situated in the State of

Delhi

3 (a) The objects to be pursued by the company on its incorporation are:

1.To plan, promote and develop an integrated and efficient power transmission system network in all its aspects including planning, investigation, research, design and engineering, preparation of preliminary, feasibility and definite project reports, construction, operation and maintenance of transmission lines, sub-stations, load dispatch stations and communication facilities and appurtenant works, coordination of integrated operation of regional and national grid system, execution of turn-key jobs for other utilities/organizations and wheeling of power in accordance with the policies, guidelines and objectives laid down by the Central Government from time to time.
2. To study, investigate, collect information and data, review operation, plan, research, design and prepare Report, diagnose operational difficulties and weaknesses and advise on the

remedial measures to improve
undertake development of new
and innovative product
connected with business of the
Company as well as modernize
existing EHV, HV lines and Sub-
Stations.
3.To act as consultants, technical
advisors, surveyors and providers
of technical and other services to
Public or Private Sector
enterprises engaged in the
planning, investigation, research,
design and preparations of
preliminary, feasibility and
definite project reports,
manufacture of power plant and
equipment, construction,
generation, operation and
maintenance of power
transmission system from power
generating stations and project
transmission and distribution of
power.
4.To plan, promote, develop,
erect and maintain, operate and
otherwise deal in
Telecommunication networks
and services in all its aspects
including planning,
investigation, research, design
and engineering, preparation of
preliminary, feasibility and
definite project reports: to
purchase, sell, import, export,
assemble, manufacture, install,
commission, maintain, operate
commercially whether on own or
along with other, on lease or
otherwise. These networks and
for such purposes to set up and/
or install all requisite
communications facilities and
other facilities including fibre
optic links, digital microwave
links, communication cables,
other telecommunication means,
telephone and other exchanges,
co-axial stations, microwave
stations, repeater stations,
security system databases, billing
systems, subscriber management
systems and other
communication systems whether
consisting of sound, visual
impulse, or otherwise, existing or
that may be developed or
invented in the future and to

manufacture, purchase, sell, import, export, assemble, take or give on lease/rental/subscription basis or by similar means or otherwise deal in all components and other support and ancillary hardware and software systems, accessories, parts and equipments etc. used in or in connection with the operation of the above communication systems and networks including to deal with telecommunication operations or directly with the general public, commercial companies or otherwise.

(b) *Matters which are necessary for furtherance of the objects specified in clause 3(a) are

1. To obtain license, approvals and authorization from Governmental Statutory and Regulatory Authorities, as may be necessary to carry out and achieve the Objects of the Company and connected matters which may seem expedient to develop the business interests of the Company in India and abroad.
2.To enter into any arrangement with the Government of India or with any State Government or with other authorities/ commissions, local bodies or public sector or private sector undertakings, Power Utilities, Financial Institutions, Banks, International Funding Agencies and obtain such charters, subsidies, loans, advances or other money, grants, contracts, rights, sanctions, privileges, licenses or concessions whatsoever (whether statutory or
otherwise) which the Company may think it desirable to obtain for carrying its activities in furthering the interests of the Company or its members.
3.To enter into any agreement, contract or any arrangement for the implementation of the power generation, evacuation, transmission and distribution system and network with Power/ Transmission Utilities, State Electricity Boards, Vidhyut Boards,
Transmission

Companies, Generation Companies,
Licensees, Statutory bodies, other organizations (whether in Private, Public or Joint Sector Undertaking) and bulk consumers of power etc.
4.To secure the payments of money, receivables on transmission and distribution of electricity and sale of fuel, as the case may be, to the State Electricity Boards, Vidyut Boards, Transmission Utilities, Generating Companies, Transmission Companies, Distribution Companies, State Governments, Licensees, statutory bodies, other
organizations (whether in Private, Public or Joint Sector Undertaking) and bulk consumers of power etc. through Letter of Credits/ESCROW and other security documents.
5.To coordinate with the Central Transmission Utility of electricity generated by it under the relevant provisions of Electricity Act 2003 and any amendments thereto.
6.Subject to provisions of Sections 73, 74, 179, 180 & 186 and other applicable provisions of the Companies Act, 2013 and rules made thereunder and subject to other laws or directives, if any, of SEBI/RBI, to borrow money in Indian rupees or foreign currencies and obtain foreign lines of credits/ grants/ aids etc. or to receive money c deposits from public for the purpose of the Company's business in such manner and on such terms and with such rights, privileges and obligations as the Company may think fit. The Company may issue bonds/ debentures whether secured or unsecured; bills of exchange, promissory notes or other securities, mortgage or charge on all or any of the immovable and movable properties, present or future and all or any of the uncalled capital for the time being of the Company as the

Company may deem fit and
To repay, redeem or pay off any such securities or charges.
7.To lend money on property or on mortgage of immovable properties or against Bank guarantee and to make advances of money against future supply of goods and services on such terms as the Directors may consider necessary and to invest money of the Company in such manner as the Directors may think fit and to sell, transfer or to deal with the same.
8.To own, possess, acquire by purchase, lease or otherwise rights, title and interests in and to, exchange or hire real estate, equipment, Transmission lines, lands, buildings, apartments, plants, equipment, machinery, fuel blocks and hereditaments of any tenure or descriptions situated in India or abroad or any estate or interest therein and any right over or connected with land so situated and turn the same to account in any manner as may seem necessary or convenient for the purpose of business of the Company and to hold, improve, exploit, reorganize,
manage, lease, sell,
exchange or otherwise dispose of the whole or any part thereof.
9.Subject to applicable provisions of Companies Act, 2013, to subscribe for, underwrite, or otherwise acquire, hold, dispose of and deal with the shares, stocks, debentures or other securities and titles of indebtedness or the right to participate in profits or other similar documents issued by any Government authority, Corporation or body or by any company or body of persons and any option or right in respect thereof.
10.To create any depreciation fund, reserve fund, sinking fund, insurance fund, gratuity, provident fund or any other fund, for depreciation or for repairing, improving extendingor

maintaining any of the properties of the Company or for any other purposes whatsoever conducive to the interests of the Company.

11.To acquire shares, stocks, debentures or securities of any company carrying on any business which this Company is entitled to carry on or acquisition of undertaking itself which may seem likely or calculated to promote or advance the interests of the Company and to sell or dispose of or transfer any such shares, stocks or securities and the acquired undertaking.

12.To enter into partnership or into any agreement for joint working, sharing or pooling profits, joint venture, amalgamation, union of interests, co-operation, reciprocal concessions or otherwise or amalgamate with any person or company carrying on or engaged in or about to carry on or engaged in any business or transaction in India or abroad which the Company is authorized to carry on or engage in any business undertaking having objects identical or similar to, as are being carried on by this Company.

13.To establish and maintain agencies, branch offices and local agencies, to procure business in any part of India and world and to take such steps as may be necessary to give the Company such rights and privileges in any part of the world as deemed proper in the interest of the Company.

14.To promote and undertake the formation of any institution or Company or subsidiary company or for any aforesaid objects intended to benefit the Company directly or indirectly and to coordinate, control and guide their activities.

15(a).To negotiate and enter into agreements and contracts with domestic and foreign companies,

persons or other organizations, banks and financial institutions, in relation to the business of the Company including that of technical know-how, import, export, purchase or sale of plant, machinery, equipment, tools, accessories and consumables, financial assistance and for carrying out all or any of the objects of the Company.

15(b). To negotiate and enter into agreements and contracts for execution of turnkey jobs, works, supplies and export of plant, machinery, tools and accessories etc.

16.Upon and for the purpose of any issue of shares, debentures or any other securities of the Company, to enter into agreement with intermediaries including brokers, managers of issue/commission agents and underwriters and to provide for the remuneration of such persons for their services by way of payment in cash or issue of shares, debentures or other securities of the Company or by granting options to take the same or in any other manner as permissible under the law.

17.To enter into contracts of indemnity and get guarantee and allocations for the business of the Company.

18.To make arrangements for training of all categories of employees and to employ or otherwise engage experts, advisors, consultants etc. in the interest of achieving the Company's objects.

19.To promote conservation and protection of electricity from theft, safety of life and to protect environments including air, land and water etc.

20.To pay and provide for the remuneration, amelioration and welfare of persons employed or formerly employed by the Company and their families providing for pension, allowances, bonuses, other payments or by creating for the

purpose from time to time the Provident Fund, Gratuity and other Funds or Trusts. Further to undertake building or contributing to the building or houses, dwellings or chawls by grants of money, or by helping persons employed by the Company to effect or maintain insurance on their lives by contributing to the payment of premium or otherwise and by providing or subscribing or contributing towards educational institutions, recreation, hospitals and dispensaries, medical and other assistance as the Company may deem fit.

21.To ensure any rights, properties, undertakings, contracts, guarantees or obligations or profits of the Company of every nature and kind in any manner with any person, firm, association, institution or company.

22.To distribute among members of the Company dividend including bonus shares out of profits, accumulated profits or funds and resources of the Company in any manner permissible under law.

23.To institute, conduct, defend, compound or abandon any legal proceedings by or against the Company or its officers or otherwise concerning the affairs of the Company and also to compound and to allow time for payment or satisfaction of any debts or recovery due, claims or demands by or against the Company and to refer any claims or demands by or against the Company or any differences arising in execution of contracts to conciliation and arbitration and to observe, comply with and/or challenge any awards preliminary, interim or final made
in any such arbitration.

24.To pay
out of the funds of the Company all costs, charges, expenses and preliminary and

incidental to the promotion, formation, establishment and registration of the Company or other expenses incurred in this regard.

25.Subject to provisions of Sections 181, 182 & 183 of Companies Act, 2013 to contribute money or otherwise assist to charitable, benevolent, religious, scientific national, defense, public or other institutions or objects or purposes.

26.To open an account or accounts with any individual, firm or company or with any bank bankers or shroofs and to pay into and withdraw money from such account or accounts.

27.To accept gifts, bequests, devises and donations from members and others and to make gifts to members and others of money, assets and properties of any kind.

28.To carry out all or any of the objects of the company and do all or any of the above things in any part of the world and either as principal, agent, contractor or trustee or otherwise and either alone or in conjunction with others.

29.To negotiate and/or enter into agreement and contract with individuals, companies, corporations, foreign or Indian, for obtaining or providing technical, financial or any other assistance for carrying on all or any of the objects of the Company and also for the purpose of activating, research, development of projects on the basis of know-how and/or financial participation and for technical collaboration, and to acquire or provide necessary formulate and patent rights for furthering the objects of the company.

30.To aid peculiarly or otherwise, any association, body or movement having for its object the solution, settlement or surmounting of industrial or labour problems or trouble or

the promotion of industry or trade.

31.Subject to the provisions of Companies Act, 2013 or any amendment or re-enactment thereof in the event of winding up to distribute among the members in specie any property of the Company or any proceeds of sale on disposal of any property in accordance with the provisions of the Act.

32.To do all such other things as may be deemed incidental or conducive to the attainment of the above Objects or any of them and to carry on any business which may seem to the Company capable of being conveniently carried in connection with any of the Company's Objects or calculated directly or indirectly enhance the value of or render profitable any of the Company's property or rights.

33.To establish, provide, maintain and conduct or otherwise subsidies research laboratories and experimental workshops for scientific, technical or researches, experiments and to undertake and carry on directly or in collaboration with other agencies scientific and technical research experiments and tests of all kinds and to process, improve and invent new products and their techniques of manufacture and to promote, encourage, reward in every manner studies and research, scientific and technical investigations and inventions of any kind that may be considered likely to assist, encourage and promote rapid advances in technology, economies, import substitution or any business which the Company is authorized to carry on.

34.Subject to provisions of the Companies Act, 2013, to evolve scheme for restructuring or arrangement, to amalgamate or merge or to enter into partnership or into any consortium or arrangement for

sharing of profits, union of interests, co-operation, joint venture with any Person or Persons, partnership firm/firms, or company or companies carrying on or engaged in any operation capable of being conducted so conveniently in cooperation
with the business of
the Company or to benefit the Company or to the activities for which the Company has been established.
35.To apply for purchase, or otherwise acquire any trade marks, patents, brevets, inventions, licenses, concessions and the like, conferring any exclusive or nonexclusive or limited rights to use, or any secret or other information as to any invention which may be capable of being used for any of the purposes of the Company, or the acquisition of which may benefit the Company and to use, exercise, develop or grant licenses in respect of or otherwise turn to account the property, rights or information so acquired.
36.To sell, dispose or hive off an undertaking of the Company or any part thereof for such consideration as the Company may think fit and in particular for shares, debentures or securities of any other association, corporation or company.
37.To sell, improve, manage, develop, exchange, loan, lease or let, under-lease, sub - let, mortgage, dispose of, deal with in any manner, turn to account or
otherwise deal with any rights or property of the Company.

4 The liability of the member(s) is limited, and this liability is limited to the amount unpaid if any, on the shares held by them.

5 Every member of the company undertakes to contribute:

(i) to the assets of the company in the event of its being wound up while he is a member, or within one year after he ceases to be a member, for payment of the debts and liabilities of the company or of such debts and liabilities as may have been contracted before he ceases to be a member; and

(ii) to the costs, charges and expenses of winding up (and for the adjustment of the rights of the contributories among themselves), such amount as may be required, not exceeding * [ ] rupees.

(iii) The share capital of the company is 500000 rupees, divided into

50000	Equity Share	Shares of	10	Rupees each	

6

☑ We, the several persons, whose names and address are subscribed, are desirous of being formed into a company in pursuance of this memorandum of association, and we respectively agree to take the number of shares in the capital of the company set against our respective names:

☐ I, whose name and address is given below, am desirous of forming a company in pursuance of this memorandum of association and agree to take all the shares in the capital of the company:

☐ We, the several persons, whose names and addresses are subscribed, are desirous of being formed into a company in pursuance of this memorandum of association:

Subscriber Details					
S. No.	*Name, Address, Description and Occupation	DIN / PAN / Passport number	No. of shares taken	DSC	Dated
1	REC POWER DEVELOPMENT AND CONSULTANCY LIMITED, CORE-4, SCOPE COMPLEX, 7, LODHI ROAD, NEW DELHI-110003, THROUGH HoD (Finance & CS Dept.) RAJ KUMAR SONKAR S/O KISHORI LAL SONKAR R/O 168, KELEWALI KOTHI, ABU LANE, MEERUT CANTT. MEERUT-250001, UTTAR PRADESH OCCUPATION-SERVICE	1*2*5*2*	49994 Equity,0 Preferenc		05/05/2026
2	ANIL KUMAR PERALA S/O VENKATESHAM PERALA NOMINEE OF REC POWER DEVELOPMENT AND CONSULTANCY LIMITED R/O A302 TARIKA APPARTMENT, SECTOR-43 GURGAON HARYANA-122001 OCCUPATION-SERVICE	B*V*P*1*2*	1 Equity,0 Preference		05/05/2026
3	ARVIND KUMAR S/O NAND KISHOR SINGH NOMINEE OF REC POWER DEVELOPMENT AND CONSULTANCY LIMITED R/O T4-8A, SAI VATIKA APARTMENT, SECTOR-63, FARIDABAD - 121004, OCCUPATION-SERVICE	1*3*2*3*	1 Equity,0 Preference		05/05/2026
4	JASPAL SINGH KUSHWAHA S/O MITHAI LAL KUSHWAHA NOMINEE OF REC POWER DEVELOPMENT AND CONSULTANCY LIMITED R/O C-64/ FIRST FLOOR, JVTS GARDEN CHATTARPUR EXTENSION South West Delhi 110074 OCCUPATION-SERVICE	1*3*2*3*	1 Equity,0 Preference		05/05/2026
5	MUKUL AGARWAL S/O RAJESH KUMAR NOMINEE OF REC POWER DEVELOPMENT AND CONSULTANCY LIMITED R/O HOUSE NO. 767, SECOND FLOOR, ANSAL C-2 BLOCK, NEAR WATER TANK ANSAL PLAZA SECTOR-3 PALAMVIHAR, GURGAON-122017, HARYANA OCCUPATION-SERVICE	1*3*2*8*	1 Equity,0 Preference		05/05/2026
6	VIJAY SHRIDHAR KULKARNI S/O SHRIDHAR GANESH KULKARNI NOMINEE OF REC POWER DEVELOPMENT AND CONSULTANCY LIMITED R/O REGAL 501, MAPSKO ROYALE VILLE VATIKA INDIA NEXT, SECTOR-82, Narsinghpur GURGAON-122004 HARYANA OCCUPATION- SERVICE	1*3*7*8*	1 Equity,0 Preference		05/05/2026

7	NAVITA DUBAL D/O PHOOL SINGH NOMINEE OF REC POWER DEVELOPMENT AND CONSULTANCY LIMITED R/O FLAT NO. 307, GAUR GANGA-1 APARTMENT, SECTOR-4, BEHIND VAISHALI METRO STATION, VAISHALI GHAZIABAD UTTAR PRADESH - 201010 OCCUPATION-SERVICE	1*1*8*8*	1 Equity,0 Preference		05/05/2026
Total shares taken			50000 Equity,0 Preference		

Signed before me					
Membership type of the witness *(ACA/FCA/ACS/FCS/ACMA/FCMA)*	*Name of the witness	*Address, Description and Occupation	DIN / PAN / Passport number / Membership number	DSC	Dated
FCA	VINAY KUMAR	A-805, NX BYTET-3, NX ONE, TECH ZONE - IV, GREATER NOIDA WEST -201318	4*2*9*		05/05/2026

7 Shri / Smt _____ _____ Of _____ resident of _____ aged _____ years shall be the nominee in the event of death of the sole member.

Form No. INC-34

e-AOA (e-Articles of Association)

[Pursuant to Section 5 of the Companies Act, 2013 and rules made thereunder read with Schedule I]

सत्यमेव जयते

Form language

(•) English ( ) Hindi

Refer instruction kit for filing the form

*All fields marked in * are mandatory*

Table applicable to company as notified under schedule I of the Companies Act, 2013 *(F, G, H)*	F
Table F / G / H (basis on the selection of above-mentioned field) as notified under schedule I of the companies Act, 2013 is applicable to *(F – a company limited by shares G– a company limited by guarantee and having a share capital H – a company limited by guarantee and not having share capital)*	F - A COMPANY LIMITED BY SHARES
The name of the company is	JAM KHAMBHALIYA JAMNAGAR POWER TRANSMISSION LIMITED

Check if not applicable	Check if altered	Article No.	Description
			Interpretation
☐	☑	I	• (1) In these regulations-(a) the Act means the Companies Act 2013 (b) the sealmeans the common seal of the company. (2) Unless the context otherwiserequires words or expressions contained in these regulations shall bear thesame meaning as in the Act or any statutory modification thereof in force atthe date at which these regulations become binding on the company. (3)Public company means a company which-

			(a) is not a private company (b)has a minimum paid-up share capital as may be prescribed Provided that acompany which is a subsidiary of a company not being a private company shallbe deemed to be public company for the purposes of this Act even where suchsubsidiary company continues to be a private company in its articles.
			Share Capital and Variation of rights
☐	☐	II 1	• Subject to the provisions of the Act and these Articles the shares in the capital of the company shall be under the control of the Directors who may issue allot or otherwise dispose of the same or any of them to such persons in such proportion and on such terms and conditions and either at a premium or at par and at such time as they may from time to time think fit.
☐	☐	2	• Every person whose name is entered as a member in the register of members shall be entitled to receive within two months after incorporation in case of subscribers to the memorandum or after allotment or within one month after the application for the registration of transfer or transmission or within such other period as the conditions of issue shall be provided one certificate for all his shares without payment of any charges or several certificateseach for one or more of his sharesupon payment of twenty rupees for each certificate after the first. Every certificate shall be under the seal and shall specify the shares to which it relates and the amount paid - up thereon. In respect of any share or shares held jointly by several persons the company shall not be bound to issue more than one certificate and delivery of a certificate for a share to one of several joint holders shall be sufficient delivery to all such holders

☐	☐	3	• If any share certificate be worn out defaced mutilated or torn or if there be no further space on the back for endorsement of transfer then upon production and surrender thereof to the company a new certificate may be issued in lieu thereof and if any certificate is lost or destroyed then upon proof thereof to the satisfaction of the company and on execution of such indemnity as the company deem adequate a new certificate in lieu thereof shall be given. Every certificate under this Article shall be issued on payment of twenty rupees for each certificate. The provisions of Articles(2) and(3) shall mutatis mutandis apply to debentures of the company.
☐	☐	4	• Except as required by law no person shall be recognised by the company as holding any share upon any trust and the company shall not be bound by or be compelled in any way to recognise (even when having notice thereof) any equitable contingent future or partial interest in any share or any interest in any fractional part of a share or (except only as by these regulations or by law otherwise provided) any other rights in respect of any share except an absolute right to the entirety thereof in the registered holder.
☐	☐	5	• The company may exercise the powers of paying commissions conferred by sub-section (6) of section 40 provided that the rate per cent or the amount of the commission paid or agreed to be paid shall be disclosed in the manner required by that section and rules made thereunder. The rate or amount of the commission shall not exceed the rate or amount prescribed in rules made under sub-section (6) of section 40. The commission may be satisfied by the payment of cash or the allotment of fully or partly paid shares or partly in the one way and partly in the other.

☐	☐	6	• If at any time the share capital is divided into different classes of shares the rights attached to any class (unless otherwise provided by the terms of issue of the shares of that class) may subject to the provisions of section 48 and whether or not the company is being wound up be varied with the consent in writing of the holders of three-fourths of the issued shares of that class or with the sanction of a special resolution passed at a separate meeting of the holders of the shares of that class. To every such separate meeting the provisions of these regulations relating to general meetings shall mutatis mutandis apply but so that the necessary quorum shall be at least two persons holding at least one-third of the issued shares of the class in question.
☐	☐	7	• The rights conferred upon the holders of the shares of any class issued with preferred or other rights shall not unless otherwise expressly provided by the terms of issue of the shares of that class be deemed to be varied by the creation or issue of further shares ranking pari passu therewith.
☐	☐	8	• Subject to the provisions of section 55 any preference shares may with the sanction of an ordinary resolution be issued on the terms that they are to be redeemed on such terms and in such manner as the company before the issue of the shares may by special resolution determine.
			Lien
☐	☐		• The company shall have a first and paramount lienon every share (not being a fully paid share) for all monies (whether presently payable or not) called or payable at a fixed time in respect of that share and on all shares (not being fully paid shares) standing registered in the name

		of a single person for all monies presently payable by him or his estate to the companyProvided that the Board of directors may at any time declare any share to be wholly or in part exempt from the provisions of this clause. The companys lien if any on a share shall extend to all dividends payable and bonuses declared from time to time in respect of such shares.
☐ ☐	10	• The company may sell in such manner as the Board thinks fit any shares on which the company has a lienProvided that no sale shall be madea unless a sum in respect of which the lien exists is presently payable or b until the expiration of fourteen days after a notice in writing stating and demanding payment of such part of the amount in respect of which the lien exists as is presently payable has been given to the registered holder for the time being of the share or the person entitled thereto by reason of his death or insolvency.
☐ ☐	11	• To give effect to any such sale the Board may authorise some person to transfer the shares sold to the purchaser thereof The purchaser shall be registered as the holder of the shares comprised in any such transfer. The purchaser shall not be bound to see to the application of the purchase money nor shall his title to the shares be affected by any irregularity or invalidity in the proceedings in reference to the sale.
☐ ☐	12	• The proceeds of the sale shall be received by the company and applied in payment of such part of the amount in respect of which the lien exists as is presently payable. The residue if any shall subject to a like lien for sums not presently payable as existed upon the shares before the sale be paid to the person entitled to the shares at the date of the sale.

			Calls on shares
☐	☐	13	• The Board may from time to time make calls upon the members in respect of any monies unpaid on their shares (whether on account of the nominal value of the shares or by way of premium) and not by the conditions of allotment thereof made payable at fixed timesProvided that no call shall exceed one-fourth of the nominal value of the share or be payable at less than one month from the date fixed for the payment of the last preceding call. Each member shall subject to receiving at least fourteen days notice specifying the time or times and place of payment pay to the company at the time or times and place so specified the amount called on his shares. A call may be revoked or postponed at the discretion of the Board.
☐	☐	14	• A call shall be deemed to have been made at the time when the resolution of the Board authorizing the call was passed and may be required to be paid by instalments.
☐	☐	15	• The joint holders of a share shall be jointly and severally liable to pay all calls in respect thereof.
☐	☐	16	• If a sum called in respect of a share is not paid before or on the day appointed for payment thereof the person from whom the sum is due shall pay interest thereon from the day appointed for payment thereof to the time of actual payment at ten per cent per annum or at such lower rate if any as the Board may determine. The Board shall be at liberty to waive payment of any such interest wholly or in part.
☐	☐		• Any sum which by the terms of issue of a share becomes payable on allotment or at any fixed date whether on account of the nominal value of the share or by way of

		17	premium shall for the purposes of these regulations be deemed to be a call duly made and payable on the date on which by the terms of issue such sum becomes payable. In case of non-payment of such sum all the relevant provisions of these regulations as to payment of interest and expenses forfeiture or otherwise shall apply as if such sum had become payable by virtue of a call duly made and notified.
☐	☐	18	• The Board - a. may if it thinks fit receive from any member willing to advance the same all or any part of the monies uncalled and unpaid upon any shares held by him andb. upon all or any of the monies so advanced may (until the same would but for such advance become presently payable) pay interest at such rate not exceeding unless the company in general meeting shall otherwise direct twelve per cent per annum as may be agreed upon between the Board and the member paying the sum in advance.
			Transfer of shares
☐	☐	19	• The instrument of transfer of any share in the company shall be executed by or on behalf of both the transferor and transferee. The transferor shall be deemed to remain a holder of the share until the name of the transferee is entered in the register of members in respect thereof.
☐	☐	20	• The Board may subject to the right of appeal conferred by section 58 decline to register the transfer of a share not being a fully paid share to a person of whom they do not approve or any transfer of shares on which the company has a lien.
☐	☐		• The Board may decline to recognise any instrument of transfer unlessa. the instrument of transfer is in the form

		21	as prescribed in rules made under sub-section (1) of section 56b. the instrument of transfer is accompanied by the certificate of the shares to which it relates and such other evidence as the Board may reasonably require to show the right of the transferor to make the transfer andc. the instrument of transfer is in respect of only one class of shares.
☐	☐	22	• On giving not less than seven days previous notice in accordance with section 91 and rules made thereunder the registration of transfers may be suspended at such times and for such periods as the Board may from time to time determineProvided that such registration shall not be suspended for more than thirty days at any one time or for more than forty-five days in the aggregate in any year.
			Transmission of shares
☐	☐	23	• On the death of a member the survivor or survivors where the member was a joint holder and his nominee or nominees or legal representatives where he was a sole holder shall be the only persons recognised by the company as having any title to his interest in the shares Nothing in clause (i) shall release the estate of a deceased joint holder from any liability in respect of any share which had been jointly held by him with other persons.
☐	☐	24	• Any person becoming entitled to a share in consequence of the death or insolvency of a member may upon such evidence being produced as may from time to time properly be required by the Board and subject as hereinafter provided elect either to be registered himself as holder of the share or to make such transfer of the share as the deceased or insolvent member could have

			made. The Board shall in either case have the same right to decline or suspend registration as it would have had if the deceased or insolvent member had transferred the share before his death or insolvency.
☐	☐	25	• If the person so becoming entitled shall elect to be registered as holder of the share himself he shall deliver or send to the company a notice in writing signed by him stating that he so elects. If the person aforesaid shall elect to transfer the share he shall testify his election by executing a transfer of the share. All the limitations restrictions and provisions of these regulations relating to the right to transfer and the registration of transfers of shares shall be applicable to any such notice or transfer as aforesaid as if the death or insolvency of the member had not occurred and the notice or transfer were a transfer signed by that member.
☐	☐	26	• A person becoming entitled to a share by reason of the death or insolvency of the holder shall be entitled to the same dividends and other advantages to which he would be entitled if he were the registered holder of the share except that he shall not before being registered as a member in respect of the share be entitled in respect of it to exercise any right conferred by membership in relation to meetings of the company Provided that the Board may at any time give notice requiring any such person to elect either to be registered himself or to transfer the share and if the notice is not complied with within ninety days the Board may thereafter withhold payment of all dividends bonuses or other monies payable in respect of the share until the requirements of the notice have been complied with.
☑	☐		• In case of a One Person Company on the death of the sole member the person nominated by such member

		27	shall be the person recognised by the company as having title to all the shares of the member the nominee on becoming entitled to such shares in case of the members death shall be informed of such event by the Board of the company such nominee shall be entitled to the same dividends and other rights and liabilities to which such sole member of the company was entitled or liable on becoming member such nominee shall nominate any other person with the prior written consent of such person who shall in the event of the death of the member become the member of the company.
			Forfeiture of shares
☐	☐	28	• If a member fails to pay any call or instalment of a call on the day appointed for payment thereof the Board may at any time thereafter during such time as any part of the call or instalment remains unpaid serve a notice on him requiring payment of so much of the call or instalment as is unpaid together with any interest which may have accrued.
☐	☐	29	• The notice aforesaid shall name a further day (not being earlier than the expiry of fourteen days from the date of service of the notice) on or before which the payment required by the notice is to be made and state that in the event of non-payment on or before the day so named the shares in respect of which the call was made shall be liable to be forfeited.
☐	☐	30	• If the requirements of any such notice as aforesaid are not complied with any share in respect of which the notice has been given may at any time thereafter before the payment required by the notice has been made be forfeited by a resolution of the Board to that effect.

☐	☐	31	• A forfeited share may be sold or otherwise disposed of on such terms and in such manner as the Board thinks fit.At any time before a sale or disposal as aforesaid the Board may cancel the forfeiture on such terms as it thinks fit.
☐	☐	32	• A person whose shares have been forfeited shall cease to be a member in respect of the forfeited shares but shall notwithstanding the forfeiture remain liable to pay to the company all monies which at the date of forfeiture were presently payable by him to the company in respect of the shares. The liability of such person shall cease if and when the company shall have received payment in full of all such monies in respect of the shares.
☐	☐	33	• A duly verified declaration in writing that the declarant is a director the manager or the secretary of the company and that a share in the company has been duly forfeited on a date stated in the declaration shall be conclusive evidence of the facts therein stated as against all persons claiming to be entitled to the share The company may receive the consideration if any given for the share on any sale or disposal thereof and may execute a transfer of the share in favour of the person to whom the share is sold or disposed of The transferee shall thereupon be registered as the holder of the share and The transferee shall not be bound to see to the application of the purchase money if any nor shall his title to the share be affected by any irregularity or invalidity in the proceedings in reference to the forfeiture sale or disposal of the share.
☐	☐	34	• The provisions of these regulations as to forfeiture shall apply in the case of non-payment of any sum which by the terms of issue of a share becomes payable at a fixed time whether on account of the nominal value of the

			share or by way of premium as if the same had been payable by virtue of a call duly made and notified.
			Alteration of capital
☐	☐	35	• The company may from time to time by ordinary resolution increase the share capital by such sum to be divided into shares of such amount as may be specified in the resolution.
☐	☐	36	• Subject to the provisions of section 61 the company may by ordinary resolution consolidate and divide all or any of its share capital into shares of larger amount than its existing shares convert all or any of its fully paid-up shares into stock and reconvert that stock into fully paid-up shares of any denomination sub-divide its existing shares or any of them into shares of smaller amount than is fixed by the memorandum cancel any shares which at the date of the passing of the resolution have not been taken or agreed to be taken by any person.
☐	☐	37	• Where shares are converted into stock the holders of stock may transfer the same or any part thereof in the same manner as and subject to the same regulations under which the shares from which the stock arose might before the conversion have been transferred or as near thereto as circumstances admit Provided that the Board may from time to time fix the minimum amount of stock transferable so however that such minimum shall not exceed the nominal amount of the shares from which the stock arose. the holders of stock shall according to the amount of stock held by them have the same rights privileges and advantages as regards dividends voting at meetings of the companyand other matters as if they held the shares from which the stock arose but no such privilege or advantage (except participation in the

			dividends and profits of the company and in the assets on winding up) shall be conferred by an amount of stock which would not if existing in shares have conferred that privilege or advantage. such of the regulations of the company as are applicable to paid-up shares shall apply to stock and the words share and shareholder in those regulations shall include stock and stock-holder respectively.
☐	☐	38	• The company may by special resolution reduce in any manner and with and subject to any incident authorised and consent required by law it share capital any capital redemption reserve account or any share premium account.
			Capitalisation of profits
☐	☐	39	• The company in general meeting may upon the recommendation of the Board resolve that it is desirable to capitalise any part of the amount for the time being standing to the credit of any of the companys reserve accounts or to the credit of the profit and loss accountor otherwise available for distribution and that such sum be accordingly set free for distribution in the manner specified in clause (ii) amongst the members who would have been entitled thereto if distributed by way of dividend and in the same proportions. The sum aforesaid shall not be paid in cash but shall be applied subject to the provision contained in clause (iii) either in or towards paying up any amounts for the time being unpaid on any shares held by such members respectively paying up in full unissued shares of the company to be allotted and distributed credited as fully paid-up to and amongst such members in the proportions aforesaid partly in the way specified in sub-clause (A) and partly in that specified in sub-clause (B) A securities premium account and a

			capital redemption reserve account may for the purposes of this regulation be applied in the paying up of unissued shares to be issued to members of the company as fully paid bonus shares The Board shall give effect to the resolution passed by the company in pursuance of this regulation.
☐	☐	40	• Whenever such a resolution as aforesaid shall have been passed the Board shall make all appropriations and applications of the undivided profits resolved to be capitalised thereby and all allotments and issues of fully paid shares if any and generally do all acts and things required to give effect thereto. The Board shall have power to make such provisions by the issue of fractional certificates or by payment in cash or otherwise as it thinks fit for the case of shares becoming distributable in fractions and to authorise any person to enter on behalf of all the members entitled thereto into an agreement with the company providing for the allotment to them respectively credited as fully paid-up of any further shares to which they may be entitled upon such capitalisation or as the case may require for the payment by the company on their behalf by the application thereto of their respective proportions of profits resolved to be capitalised of the amount or any part of the amounts remaining unpaid on their existing shares Any agreement made under such authority shall be effective and binding on such members
			Buy-back of shares
☐	☐	41	• Notwithstanding anything contained in these articles but subject to the provisions of sections 68 to 70 and any other applicable provision of the Act or any other law for the time being in force the company may purchase its own shares or other specified securities.

			General meetings
☐	☐	42	• All general meetings other than annual general meeting shall be called extraordinary general meeting.
☐	☐	43	• The Board may whenever it thinks fit call an extraordinary general meeting. If at any time directors capable of acting who are sufficient in number to form a quorum are not within India any director or any two members of the company may call an extraordinary general meeting in the same manner as nearly as possible as that in which such a meeting may be called by the Board.
			Proceedings at general meetings
☐	☐	44	• No business shall be transacted at any general meeting unless a quorum of members is present at the time when the meeting proceeds to business. Save as otherwise provided herein the quorum for the general meetings shall be as provided in section 103.
☐	☐	45	• The chairperson if any of the Board shall preside as Chairperson at every general meeting of the company.
☐	☐	46	• If there is no such Chairperson or if he is not present within fifteen minutes after the time appointed for holding the meeting or is unwilling to act as chairperson of the meeting the directors present shall elect one of their members to be Chairperson of the meeting.
☐	☐	47	• If at any meeting no director is willing to act as Chairperson or if no director is present within fifteen minutes after the time appointed for holding the meeting the members present shall choose one of their members to be Chairperson of the meeting.

☑	☐	48	• In case of a One Person Company the resolution required to be passed at the general meetings of the company shall be deemed to have been passed if the resolution is agreed upon by the sole member and communicated to the company and entered in the minutes book maintained under section 118 such minutes book shall be signed and dated by the member the resolution shall become effective from the date of signing such minutes by the sole member.
			Adjournment of meeting
☐	☐	49	• The Chairperson may with the consent of any meeting at which a quorum is present and shall if so directed by the meeting adjourn the meeting from time to time and from place to place. No business shall be transacted at any adjourned meeting other than the business left unfinished at the meeting from which the adjournment took place. When a meeting is adjourned for thirty days or more notice of the adjourned meeting shall be given as in the case of an original meeting. Save as aforesaid and as provided in section 103 of the Act it shall not be necessary to give any notice of an adjournment or of the business to be transacted at an adjourned meeting.
			Voting rights
☐	☐	50	• Subject to any rights or restrictions for the time being attached to any class or classes of shares on a show of hands every member present in person shall have one vote and on a poll the voting rights of members shall be in proportion to his share in the paid-up equity share capital of the company.
☐	☐	51	• A member may exercise his vote at a meeting by electronic means in accordance with section 108 and shall vote only once.

☐	☐	52	• In the case of joint holders the vote of the senior who tenders a vote whether in person or by proxy shall be accepted to the exclusion of the votes of the other joint holders.For this purpose seniority shall be determined by the order in which the names stand in the register of members.
☐	☐	53	• A member of unsound mind or in respect of whom an order has been made by any court having jurisdiction in lunacy may vote whether on a show of hands or on a poll by his committee or other legal guardian and any such committee or guardian may on a poll vote by proxy.
☐	☐	54	• Any business other than that upon which a poll has been demanded maybe proceeded with pending the taking of the poll.
☐	☐	55	• No member shall be entitled to vote at any general meeting unless all calls or other sums presently payable by him in respect of shares in the company have been paid
☐	☐	56	• No objection shall be raised to the qualification of any voter except at the meeting or adjourned meeting at which the vote objected to is given or tendered and every vote not disallowed at such meeting shall be valid for all purposes. Any such objection made in due time shall be referred to the Chairperson of the meeting whose decision shall be final and conclusive.
			Proxy
☐	☐		• The instrument appointing a proxy and the power-of-attorney or other authority if any under which it is signed or a notarised copy of that power or authority shall be deposited at the registered office of the company not

		57	
			less than 48 hours before the time for holding the meeting or adjourned meeting at which the person named in the instrument proposes to vote or in the case of a poll not less than 24 hours before the time appointed for the taking of the poll and in default the instrument of proxy shall not be treated as valid.
☐	☐	58	• An instrument appointing a proxy shall be in the form as prescribed in the rules made under section 105
☐	☐	59	• A vote given in accordance with the terms of an instrument of proxy shall be valid notwithstanding the previous death or insanity of the principal or the revocation of the proxy or of the authority under which the proxy was executed or the transfer of the shares in respect of which the proxy is givenProvided that no intimation in writing of such death insanity revocation or transfer shall have been received by the company at its office before the commencement of the meeting or adjourned meeting at which the proxy is used.
			Board of Directors
☐	☑		• The day to daymanagement of the business of the Company shall be vested with the Board ofDirectors of the Company or such person(s) as may be authorized by the Boardfrom time to time. The Board may exercise all such powers of the Company and doall such acts deeds and things as are not prohibited by the Act or any otherlaw for the time being in force or by the Memorandum of Association of theCompany and without prejudice to the foregoing shall be responsible for allpolicy matters and the supervision direction and control of the conduct of thebusiness affairs and operations of the Company. (i) The first Directors of the Companyshall be 1.RAJKUMAR SONKAR 2. ARUN

		60	KUMAR CHATURVEDI 3. SUMIT MEHRA (ii) At everyannual general meeting one-third of such of the directors for the time beingas are liable to retire by rotation or if their number is neither three nor amultiple of three then the number nearest to one-third shall retire fromoffice. (iii) The directors to retire by rotation at every annual generalmeeting shall be those who have been longest in office since their lastappointment but as between persons who became directors on the same day thosewho are to retire shall in default of and subject to any agreement amongthemselves be determined by lot. (iv) At annual general meeting at which a directorretires as aforesaid the company may fill up the vacancy by appointing theretiring director or some other person thereto. The Board of Directors of theCompany shall consist of not less than 3 but not more than 15 Directors. Theappointment of Directors including the Chairman Managing Director Whole timeDirector Part-time Director shall be done in the General Meetings inaccordance with the provisions of the Companies Act 2013 and Rules madethereunder and shall be eligible for reappointment. However till the Companyis a Government Company REC Power Development and Consultancy Limited(RECPDCL)- Chairman shall have the full powers to recommend nominate the nameof any Directors to be appointed on the Board of the Company. Further RECPDCLshall also have the power to remove any director from office at any time in itsabsolute discretion. RECPDCL shall also have the right to fill any vacancies inthe office of director caused by removal resignation death or otherwise. Subjectto provisions of the Act the Company may by passing the resolution in GeneralMeeting increasedecrease the maximum number of Directors and may alter theirqualification. Further the Company may subject to the provisions of the Actremove

			any Director before the expiration of his period of office and appointanother person in place of him. The Board may appoint any person to act asalternate director for a Director during the laters absence for a period ofnot less than three months from India and such appointment shall have effectand such appointee whilst he holds office as an alternate director shall beentitled to notice of meeting of the Board and to attend and vote there ataccordingly but he shall not require any qualification and shall ipso factovacate office if and when the absent Director returns to India. Casualvacancies among Directors may be filled by the Board of Directors at theirmeeting and any person so appointed shall hold the office as per the provisionof section 161 of the Act. Subject to the provisions of Section 161 and otherapplicable provisions (if any) of the Act the Board shall have power at anytime and from time to time to appoint a person as an Additional Director butso that the total number of Directors shall not at any time exceed the maximumnumber fixed by these Articles. The Additional Director so appointed shallretire from Office at next annual General Meeting but shall be eligible forelection by the company at that meeting as a Director.
☐	☐	61	• The remuneration of the directors shall in so far as it consists of a monthly payment be deemed to accrue from day-to-day. In addition to the remuneration payable to them in pursuance of the Act the directors may be paid all travelling hotel and other expenses properly incurred by them in attending and returning from meetings of the Board of Directors or any committee thereof or general meetings of the company or in connection with the business of the company.
☐	☐	62	• The Board may pay all expenses incurred in getting up and registering the company.

☐	☐	63	• The company may exercise the powers conferred on it by section 88 with regard to the keeping of a foreign register and the Board may (subject to the provisions of that section) make and vary such regulations as it may think fit respecting the keeping of any such register.
☐	☐	64	• All cheques promissory notes drafts hundis bills of exchange and other negotiable instruments and all receipts for monies paid to the company shall be signed drawn accepted endorsed or otherwise executed as the case may be by such person and in such manner as the Board shall from time to time by resolution determine
☐	☐	65	• Every director present at any meeting of the Board or of a committee thereof shall sign his name in a book to be kept for that purpose.
☐	☐	66	• Subject to the provisions of section 149 the Board shall have power at any time and from time to time to appoint a person as an additional director provided the number of the directors and additional directors together shall not at any time exceed the maximum strength fixed for the Board by the articles. Such person shall hold office only up to the date of the next annual general meeting of the company but shall be eligible for appointment by the company as a director at that meeting subject to the provisions of the Act.
			Proceedings of the Board
☐	☐	67	• The Board of Directors may meet for the conduct of business adjourn and otherwise regulate its meetings as it thinks fit. A director may and the manager or secretary on the requisition of a director shall at any time summon a meeting of the Board.

☐	☐	68	• Save as otherwise expressly provided in the Act questions arising at any meeting of the Board shall be decided by a majority of votes. In case of an equality of votes the Chairperson of the Board if any shall have a second or casting vote.
☐	☐	69	• The continuing directors may act notwithstanding any vacancy in the Board but if and so long as their number is reduced below the quorum fixed by the Act for a meeting of the Board the continuing directors or director may act for the purpose of increasing the number of directors to that fixed for the quorum or of summoning a general meeting of the company but for no other purpose.
☐	☐	70	• The Board may elect a Chairperson of its meetings and determine the period for which he is to hold office. If no such Chairperson is elected or if at any meeting the Chairperson is not present within five minutes after the time appointed for holding the meeting the directors present may choose one of their number to be Chairperson of the meeting.
☐	☐	71	• The Board may subject to the provisions of the Act delegate any of its powers to committees consisting of such member or members of its body as it thinks fit. Any committee so formed shall in the exercise of the powers so delegated conform to any regulations that may be imposed on it by the Board.
☐	☐	72	• A committee may elect a Chairperson of its meetings. If no such Chairperson is elected or if at any meeting the Chairperson is not present within five minutes after the time appointed for holding the meeting the memberspresent may choose one of their members to be Chairperson of the meeting.

☐	☐	73	• A committee may meet and adjourn as it thinks fit. Questions arising at any meeting of a committee shall be determined by a majority of votes of the members present and in case of an equality of votes the Chairperson shall have a second or casting vote.
☐	☐	74	• All acts done in any meeting of the Board or of a committee thereof or by any person acting as a director shall notwithstanding that it may be afterwards discovered that there was some defect in the appointment of any one or more of such directors or of any person acting as aforesaid or that they or any of them were disqualified be as valid as if every such director or such person had been duly appointed and was qualified to be a director.
☐	☐	75	• Save as otherwise expressly provided in the Act a resolution in writing signed by all the members of the Board or of a committee thereof for the time being entitled to receive notice of a meeting of the Board or committee shall be valid and effective as if it had been passed at a meeting of the Board or committee duly convened and held.
☑	☐	76	• In case of a One Person Company where the company is having only one director all the businesses to be transacted at the meeting of the Board shall be entered into minutes book maintained under section 118 such minutes book shall be signed and dated by the director the resolution shall become effective from the date of signing such minutes by the director.
			Chief Executive Officer, Manager, Company Secretary or Chief Financial Officer
☐	☐		• Subject to the provisions of the Act A chief executive officer manager company secretary or chief financial

		77	officer may be appointed by the Board for such term at such remuneration and upon such conditions as it may think fit and any chief executive officer manager company secretary or chief financial officer so appointed may be removed by means of a resolution of the Board A director may be appointed as chief executive officer manager company secretary or chief financial officer
☐	☐	78	• A provision of the Act or these regulations requiring or authorising a thing to be done by or to a director and chief executive officer manager company secretary or chief financial officer shall not be satisfied by its being done by or to the same person acting both as director and as or in place of chief executive officer manager company secretary or chief financial officer.
			The Seal
☐	☐	79	• The Board shall provide for the safe custody of the seal. The seal of the company shall not be affixed to any instrument except by the authority of a resolution of the Board or of a committee of the Board authorised by it in that behalf and except in the presence of at least two directors and of the secretary or such other person as the Board may appoint for the purpose and those two directors and the secretary or other person aforesaid shall sign every instrument to which the seal of the company is so affixed in their presence.
			Dividends and Reserve
☐	☐	80	• The company in general meeting may declare dividends but no dividend shall exceed the amount recommended by the Board.
☐	☐	81	• Subject to the provisions of section 123 the Board may from time to time pay to the members such interim

			dividends as appear to it to be justified by the profits of the company.
☐	☐	82	• The Board may before recommending any dividend set aside out of the profits of the company such sums as it thinks fit as a reserve or reserves which shall at the discretion of the Board be applicable for any purpose to which the profits of the company may be properly applied including provision for meeting contingencies or for equalizing dividends and pending such application may at the like discretion either be employed in the business of the company or be invested in such investments (other than shares of the company) as the Board may from time to time thinks fit. The Board may also carry forward any profits which it may consider necessary not to divide without setting them aside as a reserve
☐	☐	83	• Subject to the rights of persons if any entitled to shares with special rights as to dividends all dividends shall be declared and paid according to the amounts paid or credited as paid on the shares in respect whereof the dividend is paid but if and so long as nothing is paid upon any of the shares in the company dividends may be declared and paid according to the amounts of the shares. No amount paid or credited as paid on a share in advance of calls shall be treated for the purposes of this regulation as paid on the share. All dividends shall be apportioned and paid proportionately to the amounts paid or credited as paid on the shares during any portion or portions of the period in respect of which the dividend is paid but if any share is issued on terms providing that it shall rank for dividend as from a particular date such share shall rank for dividend accordingly.
☐	☐	84	• The Board may deduct from any dividend payable to any member all sums of money if any presently payable by

			him to the company on account of calls or otherwise in relation to the shares of the company.
☐	☐	85	• Any dividend interest or other monies payable in cash in respect of shares may be paid by cheque or warrant sent through the post directed to the registered address of the holder or in the case of joint holders to the registered address of that one of the joint holders who is first named on the register of members or to such person and to such address as the holder or joint holders may in writing direct. Every such cheque or warrant shall be made payable to the order of the person to whom it is sent.
☐	☐	86	• Any one of two or more joint holders of a share may give effective receipts for any dividends bonuses or other monies payable in respect of such share.
☐	☐	87	• Notice of any dividend that may have been declared shall be given to the persons entitled to share therein in the manner mentioned in the Act.
☐	☐	88	• No dividend shall bear interest against the company.
			Accounts
☐	☐	89	• The Board shall from time to time determine whether and to what extent and at what times and places and under what conditions or regulations the accounts and books of the company or any of them shall be open to the inspection of members not being directors. No member (not being a director) shall have any right of inspecting any account or book or document of the company except as conferred by law or authorised by the Board or by the company in general meeting.

			Winding up
☐	☐	90	• Subject to the provisions of Chapter XX of the Act and rules made thereunder If the company shall be wound up the liquidator may with the sanction of a special resolution of the company and any other sanction required by the Act divide amongst the members in specie or kind the whole or any part of the assets of the company whether they shall consist of property of the same kind or not. For the purpose aforesaid the liquidator may set such value as he deems fair upon any property to be divided as aforesaid and may determine how such division shall be carried out as between the members or different classes of members. The liquidator may with the like sanction vest the whole or any part of such assets in trustees upon such trusts for the benefit of the contributories if he considers necessary but so that no member shall be compelled to accept any shares or other securities whereon there is any liability.
			Indemnity
☐	☐	91	• Every officer of the company shall be indemnified out of the assets of the company against any liability incurred by him in defending any proceedings whether civil or criminal in which judgment is given in his favour or in which he is acquitted or in which relief is granted to him by the court or the Tribunal.
			Others
☐	☐	92	•

Subscriber Details

S. No.	Subscriber Details				
	*Name, Address, Description and Occupation	DIN / PAN / Passport number	*Place	DSC	Dated
1	REC POWER DEVELOPMENT AND CONSULTANCY LIMITED, CORE-4, SCOPE COMPLEX, 7, LODHI ROAD, NEW DELHI- 110003, THROUGH HoD (Finance & CS Dept.) RAJ KUMAR SONKAR S/O KISHORI LAL SONKAR R/O 168, KELEWALI KOTHI, ABU LANE, MEERUT CANTT. MEERUT - 250001, UTTAR PRADESH OCCUPATION-SERVICE	1*2*5*2*	NEW DELHI		05/05/2026
2	ANIL KUMAR PERALA S/O VENKATESHAM PERALA NOMINEE OF REC POWER DEVELOPMENT AND CONSULTANCY LIMITED R/O A302 TARIKA APPARTMENT, SECTOR-43 GURGAON HARYANA-122001 OCCUPATION-SERVICE	B*V*P*1*2*	NEW DELHI		05/05/2026
3	ARVIND KUMAR S/O NAND KISHOR SINGH NOMINEE OF REC POWER DEVELOPMENT AND CONSULTANCY LIMITED R/O T4-8A, SAI VATIKA APARTMENT, SECTOR-63, FARIDABAD - 121004, OCCUPATION-SERVICE	1*3*2*3*	NEW DELHI		05/05/2026

	4	JASPAL SINGH KUSHWAHA S/O MITHAI LAL KUSHWAHA NOMINEE OF REC POWER DEVELOPMENT AND CONSULTANCY LIMITED R/O C-64/ FIRST FLOOR, JVTS GARDEN CHATTARPUR EXTENSION South West Delhi 110074 OCCUPATION-SERVICE	1*3*2*3*	NEW DELHI		05/05/2026
	5	MUKUL AGARWAL S/O RAJESH KUMAR NOMINEE OF REC POWER DEVELOPMENT AND CONSULTANCY LIMITED R/O HOUSE NO. 767, SECOND FLOOR, ANSAL C-2 BLOCK, NEAR WATER TANK ANSAL PLAZA SECTOR-3 PALAMVIHAR, GURGAON- 122017, HARYANA OCCUPATION -SERVICE	1*3*2*8*	NEW DELHI		05/05/2026
	6	VIJAY SHRIDHAR KULKARNI S/O SHRIDHAR GANESH KULKARNI NOMINEE OF REC POWER DEVELOPMENT AND CONSULTANCY LIMITED R/O REGAL 501, MAPSKO ROYALE VILLE VATIKA INDIA NEXT, SECTOR-82, Narsinghpur GURGAON-122004 HARYANA OCCUPATION- SERVICE	1*3*7*8*	NEW DELHI		05/05/2026
	7	NAVITA DUBAL D/O PHOOL SINGH NOMINEE OF REC POWER DEVELOPMENT AND	1*1*8*8*	NEW DELHI		05/05/2026

	CONSULTANCY LIMITED R/O FLAT NO. 307, GAUR GANGA-1 APARTMENT, SECTOR-4, BEHIND VAISHALI METRO STATION, VAISHALI GHAZIABAD UTTAR PRADESH - 201010 OCCUPATION-SERVICE				

Signed before me						
Name Prefix *(ACA/FCA/ACS/FCS/ACMA/FCMA)*	***Name of the witness**	***Address, Description and Occupation**	***DIN / PAN / Passport number / Membership**	***Place**	**DSC**	**Dated**
FCA	VINAY KUMAR	A-805, NX BYTE T-3, NX ONE, TECH ZONE - IV, GREATER NOIDA WEST -201318	4*2*9*	NEW DELHI		05/05/2026

OpenAI.

The valuation of DeepSeek has increased significantly from $20bn when it started the fundraising talks only weeks ago, as investors strive to bet on the lab's potential despite its lack of focus on commercialisation.

Liang Wenfeng, the billionaire founder of the Hangzhou-based start-up, could also invest personally in this round, two of the people said. He controls 89.5 per cent of DeepSeek through personal holdings and affiliated groups, according to company filings.

Backing from China's most strategic government fund in semiconductors would reinforce DeepSeek's position as value of $52bn.

Liang initially wanted to raise a nominal sum to assign a value to DeepSeek's options in an attempt to stop his researchers being poached by competitors offering bumper pay packages, the FT reported last month.

Stock options typically make up most of an AI researcher's remuneration.

Now that DeepSeek's valuation has risen significantly, Liang might consider raising more money to boost a war chest for future investment in computing capacity, the person said.

DeepSeek, the Big Fund and Tencent did not respond for comment.

ing from Lewy body dementia and he had largely withdrawn from public life in recent years.

He was best known for launching CNN in 1980, disrupting the television ecosystem and ushering in a faster, more dramatic rhythm to US news.

He belonged to a generation of larger-than-life media entrepreneurs, including Rupert Murdoch, who helped shape the modern entertainment and news landscape.

Mark Thompson, CNN's chief executive, said yesterday: "Ted is the giant on whose shoulders we stand," praising Turner as "intrepid, fearless and

REC POWER DEVELOPMENT AND CONSULTANCY LIMITED

(A wholly owned subsidiary of REC Ltd.)

GLOBAL INVITATION (Through e-bidding Only)

FOR SELECTION OF TRANSMISSION SERVICE PROVIDER THROUGH TARIFF BASED COMPETITIVE BIDDING (TBCB) PROCESS ON BUILD, OWN, OPERATE AND TRANSFER (BOOT) BASIS FOR 02 (Two) INTER – STATE TRANSMISSION PROJECTS

REC Power Development and Consultancy Limited, New Delhi, India (a wholly owned subsidiary of REC Limited, a Maharatna Central Public Sector Undertaking) invites proposal for setting up of the below mentioned transmission projects through TBCB process on Build, Own, Operate and Transfer (BOOT) basis following single stage two envelope process of "Request for Proposal (RFP)". Interested bidders may refer to the Request for Proposal (RFP) notifications and RFP documents available on our websites www.recpdcl.in & www.recindia.nic.in w.e.f. 04.05.2026.

The bidders may obtain the RFP documents on all working days between 10:30 hours (IST) to 16:00 hours (IST) from 04.05.2026 to one day prior to bid submission date on payment of non-refundable fee of Rs. 5,00,000/- (Rupees Five Lakh Only) or US$ 7000 (US Dollars Seven Thousand Only) + 18% GST for each transmission projects as per details provided in the RFP document available on the websites www.recpdcl.in & www.recindia.nic.in.

The Request for Proposal (RFP) documents can also be downloaded from our websites www.recpdcl.in & www.recindia.nic.in, however, in such cases interested parties can submit Response to RFP only on submission of non-refundable fee of Rs. 5,00,000/- (Rupees Five Lakh Only) or US$ 7000 (US Dollars Seven Thousand Only) + 18% GST for each transmission projects as per details provided in the RFP document. The survey report & clarifications to RFP document shall be issued to those bidders, who have obtained/ purchased RFP documents by paying requisite fee. The important timelines in this regard are as follows:

Sr. No.	Name of Project	Last Date for seeking clarifications	Last Date for submission of Response to RFP	Details of Opening of Response to RFP
1.	Transmission system for Integration of Power from RE Projects in Lakadia REZ in Gujarat-Phase II (7500MW)	25.05.2026	06.07.2026 up to 1500 Hrs (IST)	06.07.2026 at 1530 Hrs (IST)
2.	Common Transmission System for evacuation of power from Lakadia (Phase-II: 7.5GW), Jam Khambhaliya (Phase-II: 5.5GW) and Jamnagar (Phase-I: 1GW) - Part-B	25.05.2026	06.07.2026 up to 1600 Hrs (IST)	06.07.2026 at 1630 Hrs (IST)

All corrigenda, addenda, amendments, time extensions, etc. to the RFP will be hosted on our websites www.recpdcl.in & www.recindia.nic.in. Bidders should regularly visit our websites to keep themselves updated.

Note: RECPDCL reserves the right to cancel or modify the process without assigning any reason and without any liability. This is not an offer.

Chief Executive Officer
REC Power Development and Consultancy Ltd.
Core-4, SCOPE Complex, 7, Lodhi Road, New Delhi-110003, India

Bid Process Coordinator
REC Power Development
REC Power Development and Consultancy Limited

An Initiative of
Ministry of Power
Government of India

Initiative Partner
Central Electricity Authority

ऊर्जा ही जीवन है, इसे बचाएं।

Give a missed call on toll free number 18002003004 to get our Apps

NOTICE OF UCC ARTICLE 9 PUBLIC SALE BY SECURED PARTY

On May 19th, 2026, at 12:00 p.m. Eastern Time, via videoconference, a public sale (the "Public Sale") will be conducted of substantially all assets constituting the collateral (the "Sale Assets"), in accordance with Section 9-610 of the New York Uniform Commercial Code and other applicable law. Access details will be provided to qualified bidders.

The subject ("Borrower") is a B2B cloud software business serving in-house marketing organizations at consumer-facing enterprises. The platform unifies customer information from across the organization's operating systems and supports the planning, execution, and measurement of customer engagement programs across multiple direct channels. Capabilities span audience development, lifecycle and behavioral program execution, content personalization, and campaign measurement, with machine learning and generative AI features assisting with routine setup, content variation, and program optimization. The business operates as a component of its customers' modern customer-engagement and growth marketing infrastructure, driving measurable improvements in conversion, retention, and customer lifetime value. Borrower's parent holding company ("Holdings," and together with Borrower, the "Debtors") is also a debtor under the Loan Documents. Borrower and Holdings are each Delaware corporations.

The Public Sale is being conducted by RUNWAY GROWTH FINANCE CORP., as administrative agent and collateral agent ("Agent"), to enforce its rights in the collateral under that certain Loan and Security Agreement, dated as of December 19, 2023, by and among Borrower, Holdings, the lenders party thereto and Agent (as modified from time to time, the "Loan Agreement," and together with the related loan documents, the "Loan Documents"). Debtors granted Agent a security interest in the Sale Assets to secure the obligations under the Loan Documents. The secured obligations outstanding as of the Public Sale date will be not less than $35,000,000.

The Sale Assets consist primarily of (i) substantially all assets used in Borrower's software business, including intellectual property, software and related technology, source code, object code, documentation, trade names, trademarks, domain names, websites, accounts, contracts, books and records, deposit accounts, equipment and general intangibles, and (ii) substantially all assets of Holdings, including Holdings' equity interests in Borrower. Additional information will be made available upon request, subject to customary non-disclosure agreements and bid procedures.

The Sale Assets may be sold in one or more lots, on an "AS IS, WHERE IS" basis, with all faults and without recourse or any representation or warranty, express or implied, including as to title, value, condition, merchantability or fitness, except as expressly set forth in the form of asset purchase agreement available upon request. Agent intends to sell the Sale Assets to the highest or otherwise best qualified bidder at the Public Sale. The Public Sale will be for cash, credit against outstanding indebtedness under the Loan Documents, or other consideration approved by Agent, and subject to commercially reasonable bid procedures and other requirements, which will be available upon request. Interested parties must submit a bid, proposed asset purchase agreement, and proof of ability to fund no later than May 15th, 2026, at 5:00 p.m. Eastern Time (the "Bid Deadline"). Qualified bidders will receive the access details for the Public Sale. Agent reserves the right to credit bid on behalf of the Lenders for some or all of the Sale Assets and to modify the terms, conditions, or procedures for the Public Sale, withdraw all or any portion of the Sale Assets, or continue the Public Sale to a future date for any reason.

Any inquiries regarding the Public Sale or the Sale Assets should be directed to hlipton@rockcreekfa.com by the Bid Deadline.

Nordics and Car

BUSINESS INSIGHT
EUROPE

Richard Milne

How shoul
panies th
pling th
less depe
It is a
most businesses. So w
the dependencies on
ogy and finance that
think about. "My b
look into how we co
most cases the hones
we couldn't," says or
cial chief executive.

But one country
making a pitch for
European countrie
arguing that it is suff
soon. That country
under Prime
Carney is trying to
Middle Powers al
standing up to the U
usual foes of China a

Canadian minist
common sights in E
that one Nordic mi
ingly, says: "They sh

Nowhere has th
focused more than
tries, due to shared
combined focus on
tance of the Arctic
– alongside quest
mitment of the US

That in turn ra

fourth child, ten-year-old Gab-neesh, narrowly escaped death and is the sole survivor of the inciden[illegible] according to reports, the four children had gone to bathe in a pond located about one kilometre from their village at around 3 PM.

Locals said Ansh (10), Ayush (9), and Pravendra (9) ventured into deeper waters of the pond, ...

... water, and their families hurried them to a nearby hospital, where doctors declared all three children dead.

Police from Meerganj reached the scene soon after being informed and have initiated necessary legal proceedings, said DSP Ajay Kumar.

HTC

जयपुर जिला दुग्ध उत्पादक सहकारी संघ लि.

गांधी नगर रेल्वे स्टेशन के पास, जयपुर-302015, Tele Fax: 0141-2711075
EPABX: 0141-2713666-69, ई-मेल: jaipurdairy@jaipurdairy.com, वेबसाइट : www.jaipurdairy.com

ई–निविदा/निविदा सूचना

NIB – CDF2627A0135 जयपुर दुग्ध संघ में **5 लेयर पॉलिथीन फिल्म फॉर पैकिंग मिल्क/छाछ/लस्सी, प्लास्टिक पैलेट्स, ई.टी.पी. कैमिकल्स, एल्युमिनियम फॉइल फॉर 200/400 ग्राम दही कप इत्यादि** की आपूर्ति हेतु निविदा/ई–निविदायें (**https://eproc.rajasthan.gov.in** पर आमंत्रित की जाती हैं। विस्तृत शर्तें/महत्वपूर्ण दिनांक इत्यादि संघ की वेबसाईट **www.jaipurdairy.com** एवं **sppp.rajasthan.gov.in/** पर भी देखी जा सकती हैं। **प्रबन्ध संचालक**

जीवन में हर रंग, हमारा प्यार

GOVT. OF INDIA
MINISTRY OF CORPORATE AFFAIRS OFFICE OF THE OFFICIAL LIQUIDATOR ATTACHED TO HIGH COURT, ALLAHABAD 9th FLOOR, SANGAM PLACE, CIVIL LINES, ALLAHABAD
PH. NO. 0532-2560162, Ph: 2560312

In the matter of M/s Auto Tractors Ltd. Ltd.
(In Liquidation)
Company Petition No. 74 of 1999
e-AUCTION NOTICE

Pursuant to order 28.04.2026 passed by Hon'ble High Court of judicature at Allahabad, U.P. in Company Petition No. 74 of 1999, following immovable assets (Free hold Land, RCC Building, Shed Building and Trees etc) of the property of **M/s Auto Tractors Ltd. (In Liquidation** situated Badanpur Town Area, Teunga Colony and Village Bhupia Mau, Pratapgarh, U.P will be put to sale on "as is where is and whatever there is basis" through e-auction.

DESCRIPTION

Lot No.	Assets	Reserved Price (Rs.)	Earnest Money	Inspection Date	Inspection Time
1	Land & Building at Badanpur Town area having area 7.21 acres	37,00,00,000.00	3,70,00,000.00	13.05.2026 & 14.05.2026	11:00 AM to 5:00 PM
2	Land at Plot No.70 at Village Bhupia Mau having area 0.432 acres	1,33,00,000.00	13,30,000.00		
3	Land at Plot No.618 at Village Bhupia Mau having area 1.213 acres	4,00,00,000.00	40,00,000.00		
4	Land at Plot No.622 at Village Bhupia Mau having area 0.410 acres	1,25,00,000.00	12,50,000.00		
5	Land and Building Teunga Colony having area 3.15 acres	9,00,00,000.00	90,00,000.00		
6	Trees	2,50,000.00	25,000.00		
7	As whole	526050000.00	5,26,05,000.00		

Last Date of submitting the E.M.D. 20.05.2026 upto 5:00 PM
The EMD amount (Interest free) should be deposited by way of RTGS in the account of Official Liquidator, UP, EMD saving account 0012000101569179, Punjab National Bank, Civil Lines, Allahabad Branch Code 001200, RTGS/IFS Code PUNB0001200.
Date of bidding 22.05.2026 up to 05:00 P.M.
This sale notice be treated as notice to the Secured Creditors/Unsecured Creditor/Contributories/Central & State Govt. Authorities/bodies & all other parties having interest in the matter of company (in liquidation).
All the details along with terms and conditions of e-auction are available on portal **https://ol.auctiontiger.net** of e-Procurement Technologies Limited (Auction Tiger) Ltd. For queries with regard to said e-auction contact no. (i) Gyan Prakash Mob-9265562818, (ii) Aryan Vaghela Mob-9265562821, (iii) Hardik Gadge Mob-9374519754 (iv) Maulik Shrimali Mob-9173528727. The details also available on **www.mca.gov.in** (website of Ministry of Corporate Affairs).

MUKESH KUMAR SONI
OFFICIAL LIQUIDATOR
U.P., ALLAHABAD

Date: 04.05.2026

REC POWER DEVELOPMENT AND CONSULTANCY LIMITED
(A wholly owned subsidiary of REC Ltd.)

GLOBAL INVITATION (Through e-bidding Only)
FOR SELECTION OF TRANSMISSION SERVICE PROVIDER THROUGH TARIFF BASED COMPETITIVE BIDDING (TBCB) PROCESS ON BUILD, OWN, OPERATE AND TRANSFER (BOOT) BASIS FOR 02 (Two) INTER – STATE TRANSMISSION PROJECTS

REC Power Development and Consultancy Limited, New Delhi, India (a wholly owned subsidiary of REC Limited, a Maharatna Central Public Sector Undertaking) invites proposal for setting up of the below mentioned transmission projects through TBCB process on Build, Own, Operate and Transfer (BOOT) basis following single stage two envelope process of "Request for Proposal (RFP)". Interested bidders may refer to the Request for Proposal (RFP) notifications and RFP documents available on our websites www.recpdcl.in & www.recindia.nic.in w.e.f. 04.05.2026.

The bidders may obtain the RFP documents on all working days between 10:30 hours (IST) to 16:00 hours (IST) from 04.05.2026 to one day prior to bid submission date on payment of non-refundable fee of Rs. 5,00,000/- (Rupees Five Lakh Only) or US$ 7000 (US Dollars Seven Thousand Only) + 18% GST for each transmission projects as per details provided in the RFP document available on the websites www.recpdcl.in & www.recindia.nic.in.

The Request for Proposal (RFP) documents can also be downloaded from our websites www.recpdcl.in & www.recindia.nic.in, however, in such cases interested parties can submit Response to RFP only on submission of non-refundable fee of Rs. 5,00,000/- (Rupees Five Lakh Only) or US$ 7000 (US Dollars Seven Thousand Only) + 18% GST for each transmission projects as per details provided in the RFP document. The survey report & clarifications to RFP document shall be issued to those bidders, who have obtained/purchased RFP documents by paying requisite fee. The important timelines in this regard are as follows:

Sr. No.	Name of Project	Last Date for seeking clarifications	Last Date for submission of Response to RFP	Details of Opening of Response to RFP
1.	Transmission system for Integration of Power from RE Projects in Lakadia REZ in Gujarat-Phase II (7500MW)	25.05.2026	06.07.2026 up to 1500 Hrs (IST)	06.07.2026 at 1530 Hrs (IST)
2.	Common Transmission System for evacuation of power from Lakadia (Phase-II: 7.5GW), Jam Khambhaliya (Phase-II: 5.5GW) and Jamnagar (Phase-I: 1GW) - Part-B	25.05.2026	06.07.2026 up to 1600 Hrs (IST)	06.07.2026 at 1630 Hrs (IST)

All corrigenda, addenda, amendments, time extensions, etc. to the RFP will be hosted on our websites www.recpdcl.in & www.recindia.nic.in. Bidders should regularly visit our websites to keep themselves updated.
Note: RECPDCL reserves the right to cancel or modify the process without assigning any reason and without any liability. This is not an offer.

Chief Executive Officer
REC Power Development and Consultancy Ltd.
Core-4, SCOPE Complex, 7, Lodhi Road, New Delhi-110003, India

Bid Process Coordinator — **REC Power Development and Consultancy Limited**
An Initiative of — **Ministry of Power** Government of India
Initiative Partner — **Central Electricity Authority**

... the village. The injured boy, Yashpal, son of Sukhveer Singh, was first taken to the district hospital in Kasganj and later referred to Jawaharlal Nehru Medical College of Aligarh Muslim University, where he died during treatment on Saturday.

Govind Vallabh Sharma, in-charge of Sahawar police station, said the victim's father alleged in his complaint that Dhanesh Yadav had asked Yashpal to bring water for consuming liquor. When the boy refused, the accused allegedly shot him and fled from the spot.

Shahida Nasreen, circle officer, Sahawar, said police received information about the shooting and rushed to the village. "On reaching the village, the police team came to know that the accused Dhanesh Yadav had allegedly shot the 9-year-old boy Yashpal, son of Sukhveer," she said. Police initially registered a case under Section 109(1) (attempt to murder) of the Bharatiya Nyaya Sanhita (BNS). Following the child's death, Section 103(1) for murder was added to the FIR. The accused, who had absconded after the incident, was arrested on Saturday from Kasganj district. Police said a weapon was also recovered from his possession. He was later produced before a court and sent to jail.

THE ACCUSED, WHO HAD ABSCONDED, WAS ARRESTED ON SATURDAY FROM KASGANJ DISTRICT

PUBLIC NOTICE

Public is hereby informed that HDFC Bank Ltd., Agra has received a proposal to grant loan facilities to Sh. Prakash Jindal, Sh. Naresh Jindal, & Sh. Jitesh Jindal Ss/o Sh. Kalicharan Jindal R/o Alok Nagar, Jaipur House, Agra for M/s KC Enterprises belonging to property mentioned in schedule. If any Person/Financial Institutions/ Banks/Trust objecting for the said mortgage or having any right in the schedule property may lodge their objections and/or claims with the under signed along with the supporting documentary evidence within fourteen days from the date of this publication and objections/or claims received thereafter will not be binding on my client and mortgage created in favour of my client shall be treated as valid and legally enforceable. SCHEDULE Property/Shop No. 6 (Basement Lower Ground Floor) area 14.21 Sq. Mtrs. bounded as East -Shop No. 7, West Shop No. 5, North Open Land, South- Coridor 10 Ft. wide & Property/Shop No. 7 (Basement Lower Ground Floor) area 14.21 Sq. Mtr. bounded as East -Shop No. 8, West Shop No. 6, North Open Land, South Coridor 10 Ft. wide. & Property/Shop No. 8 (Basement Lower Ground Floor) area 14.21 Sq. Mtrs. bounded as East -Common Space, West Shop No. 7, North Open Land, South Coridor 10 Ft. wide, & Property/Shop No. 12 (Basement Lower Ground Floor) area 14.21 Sq. Mtrs. and bounded as East Shop No. 11, West Part of Property, North Coridor 10 ft. wide, South open land & Property/Shop No. 13 (Basement Lower Ground Floor) area 19.12 Sq. Mtrs bounded as East -Stairs, West-Shop No. 14 LGF, North-Common Coridor & exit 3.04 Mtr. wide, South-Plot others, Constructed over the Plot No. 10 Sector-9, situated at Pt. Deen Dayal Upadhyay Puram, Sikandra Grah Sthan Yojna, (Fourtune Tower), Agra and is bounded as follow-Navin Kumar Kulshreshtha Advocate Address: 44A, Arvindpuram, Phase-B, Sikandra, Agra-282007 Mob. No. 9411923298

letters@htlive.com

MEERUT: A road accident Muzaffarnagar district on Saturday claimed the lives of three members of a family—a father, mother, and son—sparking massive protests and a road blockade by enraged villagers demanding compensation and swift action against the accused driver.

The incident occurred on the Phalavda–Khatauli road under Khatauli police station limits when the victims were traveling from their village Chhachharpur to Khatauli on a motorcycle. According to police, the rider attempted to avoid an oncoming

Census 20[illegible] populatio[illegible]

HT Correspondent

letters@hindustantimes.c[illegible]

LUCKNOW: Census 2027 will be conducted in two phases – house-listing and housing census (HLO) from May 22 to June 20 and population enumeration in February 2027, said Sheetal Verma, director of Census Operations, Uttar Pradesh, here on Saturday.

Caste enumeration will be done along with census operations in the second phase. The last comprehensive caste-based count was done between 1881 and 1931. Caste was excluded from all census operations conducted since Independence.

Addressing a press conference, Verma said the Census will be conducted digitally for the first time in the country, with an optional 15-day self-enumeration period from May 7-21, 2026, during which individua[illegible]n enter their information on[illegible]e on the portal -se.census.gov.in. Self-enumeration is optional, not mandatory.

Verma said enumerators will visit each house between May 22 and June 20, recording information using a mobile app based on 33 questions notified by the central government. These questions relate to the condition of the houses, the facilities available to the families, and their assets.

The Census is conducted under the provisions of the Census Act, 1948, and the Census Rules, 1990. According to these provisions, all personal information collected during the census is kept strictly confidential and is not shared with anyone. The information cannot be used for tax, police, or other investigations. It cannot be used as evidence in any matter. The data is

Students and guardians at an examination centre for the National Eligibility cum Entrance Test (NEET) in Jaipur on Sunday. At least 174,000 students across Rajasthan including 36,024 in Jaipur appeared for the examination. HT PHOTO

body to Alwar for cremation.

The victim was found hanging and his brother-in-law informed the police. The body has been sent for a post-mortem and, while suicide is suspected, all angles are being investigated, said an official.

After joining judicial service in 2021, he dealt with a range of criminal and civil cases. HTC

IPS officer accused of rape put on APO

HT Correspondent
letters@hindustantimes.com

JAIPUR: A senior IPS officer, Kishan Sahai Meena, was put on awaiting posting order (APO) on Sunday a day after a 53-year-old woman filed a first information report (FIR) against him for allegedly raping her three months ago and also threatening her.

"The Inspector General of Human Rights Cell, Kishan Sahai Meena, was made awaited posting order due to administrative reasons. He will report to the headquarter till further orders," read a copy of the order issued by the department of personnel.

POLICE SAID AN FIR WAS LODGED ON SATURDAY BASED ON A COMPLAINT BY A WOMAN ALLEGING RAPE

Additional deputy commissioner of police, of Jaipur's special investigation team, Jigyasa, said, "The woman is a native of Jalandhar. She sent the complaint to the Malviya Nagar police station on Saturday based on which we have lodged the FIR. We can't reveal much details about the woman's identity."

According to the officials, the woman alleged that she knew Meena, the current inspector general of the human rights cell of Rajasthan Police, for over a year.

"She alleged that Meena committed to marry her and then invited her to his official bungalow on February 22 where he raped her. Later, he had also been threatening her for the last three months to stop her from filing an FIR. He had also allegedly told her that he is associated to a political party and so he will use his influence to ruin her life if she files any FIR," the officer said.

The FIR was lodged under section 64(1) of the Bharatiya Nyaya Sanhita (BNS).

"The woman's medical test will be conducted. We will also question the Meena about the matter. Further probe is underway."

जयपुर जिला दुग्ध उत्पादक सहकारी संघ लि.
गांधी नगर रेल्वे स्टेशन के पास, जयपुर 302015, Tele Fax: 0141-2711075
EPABX: 0141-2713666-69, ई-मेल: jaipurdairy@jaipurdairy.com, वेबसाइट : www.jaipurdairy.com

ई-निविदा/निविदा सूचना

NIB – CDF2627A0135 जयपुर दुग्ध संघ में 5 लेयर पॉलिथीन फिल्म फॉर पैकिंग मिल्क/छाछ/लस्सी, प्लास्टिक फ्लेक्स, ई.टी.पी. कैमिकल्स, एल्युमिनियम फॉइल फॉर 200/400 ग्राम दही कप इत्यादि की आपूर्ति हेतु निविदा/ई-निविदायें (https://eproc.rajasthan.gov.in पर आमंत्रित की जाती हैं। विस्तृत शर्तें/महत्वपूर्ण दिनांक इत्यादि संघ की वेबसाईट www.jaipurdairy.com एवं sppp.rajasthan.gov.in/ पर भी देखी जा सकती हैं। प्रबन्ध संचालक

जीवन में भरे रंग, हमारा ध्यान

REC POWER DEVELOPMENT AND CONSULTANCY LIMITED
(A wholly owned subsidiary of REC Ltd.)

GLOBAL INVITATION (Through e-bidding Only)
FOR SELECTION OF TRANSMISSION SERVICE PROVIDER THROUGH TARIFF BASED COMPETITIVE BIDDING (TBCB) PROCESS ON BUILD, OWN, OPERATE AND TRANSFER (BOOT) BASIS FOR 02 (Two) INTER – STATE TRANSMISSION PROJECTS

REC Power Development and Consultancy Limited, New Delhi, India (a wholly owned subsidiary of REC Limited, a Maharatna Central Public Sector Undertaking) invites proposal for setting up of the below mentioned transmission projects through TBCB process on Build, Own, Operate and Transfer (BOOT) basis following single stage two envelope process of "Request for Proposal (RFP)". Interested bidders may refer to the Request for Proposal (RFP) notifications and RFP documents available on our websites www.recpdcl.in & www.recindia.nic.in w.e.f. 04.05.2026.

The bidders may obtain the RFP documents on all working days between 10:30 hours (IST) to 16:00 hours (IST) from 04.05.2026 to one day prior to bid submission date on payment of non-refundable fee of Rs. 5,00,000/- (Rupees Five Lakh Only) or US$ 7000 (US Dollars Seven Thousand Only) + 18% GST for each transmission projects as per details provided in the RFP document available on the websites www.recpdcl.in & www.recindia.nic.in.

The Request for Proposal (RFP) documents can also be downloaded from our websites www.recpdcl.in & www.recindia.nic.in; however, in such cases interested parties can submit Response to RFP only on submission of non-refundable fee of Rs. 5,00,000/- (Rupees Five Lakh Only) or US$ 7000 (US Dollars Seven Thousand Only) + 18% GST for each transmission projects as per details provided in the RFP document.

The survey report & clarifications to RFP document shall be issued to those bidders, who have obtained/purchased RFP documents by paying requisite fee. The important timelines in this regard are as follows:

Sr. No.	Name of Project	Last Date for seeking clarifications	Last Date for submission of Response to RFP	Details of Opening of Response to RFP
1.	Transmission system for Integration of Power from RE Projects in Lakadia REZ in Gujarat-Phase II (7500MW)	25.05.2026	06.07.2026 up to 1500 Hrs (IST)	06.07.2026 at 1530 Hrs (IST)
2.	Common Transmission System for evacuation of power from Lakadia (Phase-II: 7.5GW), Jam Khambhaliya (Phase-II: 5.5GW) and Jamnagar (Phase-I: 1GW) - Part-B	25.05.2026	06.07.2026 up to 1600 Hrs (IST)	06.07.2026 at 1630 Hrs (IST)

All corrigenda, addenda, amendments, time extensions, etc. to the RFP will be hosted on our websites www.recpdcl.in & www.recindia.nic.in. Bidders should regularly visit our websites to keep themselves updated.

Note: RECPDCL reserves the right to cancel or modify the process without assigning any reason and without any liability. This is not an offer.

Chief Executive Officer
REC Power Development and Consultancy Ltd.
Core-4, SCOPE Complex, 7, Lodhi Road, New Delhi-110003, India

Bid Process Coordinator: REC Power Development and Consultancy Limited
An Initiative of: Ministry of Power, Government of India
Initiative Partner: Central Electricity Authority

बचाए। Give a missed call on toll free number 18002093004 to get our App

3 HELD, 9K SWORDS SEIZED AS ILLEGAL FACTORY BUSTED

HT Correspondent
letters@hindustantimes.com

UDAIPUR: An illegal sword manufacturing unit was busted in Rajsamand district, with police arresting three people and recovering 9,228 swords, police officers said on Sunday.

According to police, the unit was operating secretly from a scrap warehouse and a welding shop in Nathdwara.

SHO Vikram Singh said, "We received information that swords were being illegally manufactured and stocked in a scrap warehouse at Upli Odan area. Acting on the tip-off, police raided the premises and recovered 9,032 swords."

He added that two accused, Ajay Sikligar and Sonu Suthar, failed to produce any valid documents related to the weapons. Police also seized grinders, welding machines and polishing machines from the spot. Several swords were fully prepared, while many were under process.

In a second raid at a welding shop in the same area, police recovered another 196 swords and arrested Sikandar Sikligar.

SHO Singh said, "Cases under the Arms Act have been registered in both matters and further investigation is underway."

PILOT HITS BACK AT BJP IN-CHARGE OVER COMMENT

HT Correspondent
letters@hindustantimes.com

AJMER: Congress leader and former deputy chief minister Sachin Pilot on Sunday hit back at state BJP in-charge Radha Mohan Das Agrawal's remarks against him, stating that public representatives must exercise restraint and responsibility in their words and conduct.

Speaking to media persons, Pilot said, "Political leaders are constantly watched by the public and must set an example through dignified behaviour. He emphasized that ideological differences and political disagreements are natural in democracy, but politics should always maintain discipline, decorum, and mutual respect."

Pilota also alleged growing public dissatisfaction with governance in Rajasthan.

Last week, BJP's state in-charge Radha Mohan Das Agrawal had launched a scathing attack on Pilot by calling him a *Bahurupi*. "A bahurupi (Chameleon) has been made the MLA in Tonk... His one foot is at Congress and another is somewhere that nobody knows. He is not even from Tonk. Why was he made an MLA here? You have been fooled," Agrawal said.

RO-582 HT

एलपीजी की कालाबाजारी रोकने को छापेमारी तेज

कार्रवाई

नई दिल्ली, एजेंसी। पश्चिम एशिया में जारी तनाव के बीच देश में रसोई गैस की आपूर्ति सामान्य बनाए रखने के लिए सरकार ने सख्ती बढ़ा दी है। सरकार ने एक दिन में करीब 47 लाख घरेलू गैस सिलेंडर की आपूर्ति की। वहीं जमाखोरी और कालाबाजारी रोकने के लिए देशभर में 1900 से ज्यादा छापे मारे गए। पेट्रोलियम और प्राकृतिक गैस मंत्रालय के अनुसार, 2 मई को करीब 47.4 लाख बुकिंग के मुकाबले लगभग 47 लाख सिलेंडर की डिलीवरी की गई। इससे साफ है कि मांग के अनुसार आपूर्ति लगभग सामान्य बनी हुई है।

सरकार ने कहा कि घरेलू गैस, पाइप गैस और परिवहन के लिए सीएनजी की आपूर्ति पूरी तरह जारी है। वहीं, कालाबाजारी पर लगाम लगाने के लिए सरकार ने सख्त कदम उठाए हैं। देशभर में 1900 से अधिक छापेमारी की गई, जिसमें 349 गैस एजेंसियों पर जुर्माना लगाया गया, जबकि 74 एजेंसियों का संचालन अस्थायी रूप से रोक दिया गया।

बैंक कर्मियों का महंगाई भत्ता बढ़ा

नई दिल्ली, एजेंसी। सरकार ने बैंक कर्मियों के महंगाई भत्ते (डीए) में बढ़ोतरी कर दी है। यह नई दरें एक मई 2026 से प्रभावी हो चुकी हैं और जुलाई 2026 तक लागू रहेंगी। हालांकि, इस बार डीए में मामूली संशोधन किया गया है। मौजूदा संशोधन के तहत महंगाई भत्ता 25 प्रतिशत से बढ़ाकर 25.70 प्रतिशत कर दिया गया है। यानी इसमें 0.70 प्रतिशत की वृद्धि की गई है, जो मई से जुलाई 2026 की अवधि के लिए लागू रहेगी। यह भत्ता कर्मचारियों के मूल वेतन के आधार पर दिया जाता है, इसलिए बढ़ोतरी का असर हर कर्मचारी के वेतन पर अलग-अलग पड़ेगा।

'यूनिलीवर को बिक्री बढ़ने की उम्मीद'

नई दिल्ली। यूनिलीवर के मुख्य कार्यपालक अधिकारी (सीईओ) फर्नांडो फर्नांडीज ने कहा कि वैश्विक आपूर्ति श्रृंखला में बाधाओं तथा कच्चे तेल की कीमतों में वृद्धि से पैकेजिंग लागत बढ़ने के बीच भारत जैसे बाजारों में स्थानीय प्रतिस्पर्धा घट रही है, जिससे यूनिलीवर को घरेलू देखभाल श्रेणी में मात्रा वृद्धि को समर्थन मिल सकता है। उन्होंने कहा कि वैश्विक बाजार में आपूर्ति संबंधी बाधाओं से अवसर उत्पन्न हो रहे हैं और कंपनी की बहुध्रुवीय आपूर्ति श्रृंखला सुदृढ़ बनी हुई है। फर्नांडीज ने कहा कि हम भारत और दक्षिण-पूर्वी एशिया में कुछ स्थानीय कंपनियों के बीच आपूर्ति की कमी देख रहे हैं। इससे हमारी बिक्री को बल मिलेगा।

एफपीआई ने अप्रैल में 70,449 करोड़ निकाले

मुंबई, एजेंसी। विदेशी संस्थागत निवेशकों (एफपीआई) ने अप्रैल में भारतीय पूंजी बाजार से 70,449 करोड़ रुपये की शुद्ध निकासी की। शुद्ध निकासी एफपीआई द्वारा पूंजी बाजार में लगायी गयी पूंजी और निकाली गयी पूंजी का अंतर है। यह लगातार दूसरा महीना है जब एफपीआई बिकवाल रहे हैं। इससे पहले, मार्च में उन्होंने रिकॉर्ड 1,26,991 करोड़ रुपये निकाले थे।

केंद्रीय डिपॉजिटरी सेवा के आँकड़ों के अनुसार, अप्रैल में एफपीआई ने इक्विटी और डेट से पैसे निकाले जबकि हाइब्रिड उपकरणों और म्यूचुअल फंड में उनका निवेश बढ़ा है। उन्होंने वित्त वर्ष 2026-27 के पहले महीने में शुद्ध रूप से 58,378 करोड़ रुपये की इक्विटी बेची। डेट से भी उन्होंने 13,081 करोड़ रुपये की बिकवाली की।

गलत बीमा बेचने पर सख्ती बढ़ेगी

नई दिल्ली, हिन्दुस्तान ब्यूरो। ग्राहकों को गलत तरीके से बीमा पॉलिसी बेचने वाली कंपनियों और बैंकों पर सख्ती बढ़ सकती है। इसके लिए बीमा नियामक इरडा नियमों में बड़े बदलाव करने की तैयारी में है। इसके तहत बीमा पॉलिसी बेचने के तरीके में बदलाव, बैंकों पर सख्त निगरानी और वितरण व्यवस्था में सुधार जैसे कदम उठाए जाएंगे।

इस संबंध में जल्द ही एक चर्चापत्र जारी किया जा सकता है। मामले से जुड़े अधिकारी के अनुसार, नियामक की चिंता तीन प्रमुख मुद्दों को लेकर है-गलत बिक्री, ऊंची लागत और कम बीमा कवरेज। इरडा का मानना है कि अब बीमा सुधार का अगला चरण केवल नियमों में ढील देने पर नहीं, बल्कि सिस्टम की खामियों को दूर करने पर केंद्रित होगा। वर्तमान में बीमा क्षेत्र में लागत ज्यादा है, कवरेज कम है और कई जगह ग्राहकों के साथ सही व्यवहार नहीं हो रहा, जिसे ठीक करना जरूरी है। आर्थिक सर्वेक्षण 2025-26 के अनुसार, देश में बीमा पहुंच घटकर 3.7 प्रतिशत रह गई है, जो एक साल पहले 4 प्रतिशत थी। इसका मतलब है कि अभी भी बड़ी आबादी बीमा के दायरे से बाहर है।

पुराने नियमों से अधिक फायदा नहीं

हालांकि 2023 में लागू किए गए सरेंडर वैल्यू से जुड़े सख्त नियमों के बावजूद स्थिति में अपेक्षित सुधार नहीं हुआ है। इन नियमों का उद्देश्य यह था कि यदि कोई ग्राहक शुरुआती वर्षों में पॉलिसी छोड़ता है, तो उसे उचित राशि मिले। लेकिन इसका ज्यादा असर नहीं पड़ा। अब भी कंपनियां मनमाने तरीके से काम कर रही हैं। इसके अलावा सरकार और आरबीआई के साथ मिलकर इरडा बैंकों द्वारा गलत बीमा बेचने को रोकने की कोशिश कर रहा है। वित्त मंत्री ने भी बैंकों को चेतावनी दी थी कि वे बीमा की गलत बिक्री बंद करें।

mint

बाजार 30s

कमोडिटी

	भाव (रांची)	बदलाव
सोना	1,39,500	-1000
चांदी	2,51,000	-1000

करेंसी

डॉलर/रुपया उपलब्ध नहीं

चमड़ा, जूता उद्योग ने आयात शुल्क छूट मांगी

नई दिल्ली। पश्चिम एशिया संकट के कारण कच्चे माल की लागत में 40 से 60 प्रतिशत तक वृद्धि होने के बीच चमड़ा और जूता उद्योग ने कृत्रिम चमड़ा, धातु सहायक सामग्री, मशीनरी, धागे, सांचे और कुछ रसायनों जैसे महत्वपूर्ण कच्चे माल पर आयात शुल्क में छूट देने की मांग की है। अधिकारी ने यह जानकारी दी। उद्योग ने हाल में इसे वाणिज्य एवं उद्योग मंत्रालय के समक्ष मामला उठाया है।

वाहन उद्योग को हजारों करोड़ का नुकसान संभव

नई दिल्ली। भारतीय ऑटोमोबाइल उद्योग को वित्त वर्ष 2025-26 के शुद्ध लाभ में लगभग 25,000 करोड़ रुपये के नुकसान की आशंका है, क्योंकि पर्यावरण संरक्षण (उपयोग समाप्त हो चुके वाहन) नियमावली 2025 के तहत वाहन विनिर्माताओं को अतीत में बेचे गए वाहनों के लिए पर्यावरण मुआवजे हेतु बजटीय प्रावधान करना होगा।

मारुति सुजुकी की बाजार हिस्सेदारी 42% हुई

नई दिल्ली। देश की सबसे बड़ी कार विनिर्माता कंपनी मारुति सुजुकी इंडिया ने नए वित्त वर्ष 2026-27 की शुरुआत 42 प्रतिशत बाजार हिस्सेदारी के साथ की है, जो पिछले वित्त वर्ष के 39 प्रतिशत से अधिक है। उद्योग के अनुमानों के अनुसार कंपनी ने अप्रैल में 1,91,122 इकाइयों की रिकॉर्ड घरेलू बिक्री दर्ज की और इस महीने बाजार हिस्सेदारी में लगभग तीन प्रतिशत अंकों की वृद्धि की है।

डी-मार्ट का शुद्ध लाभ 19.2 प्रतिशत उछला

नई दिल्ली। खुदरा श्रृंखला डी-मार्ट का स्वामित्व और संचालन करने वाली कंपनी एवेन्यू सुपरमार्ट्स लिमिटेड ने कहा कि वित्त वर्ष 2025-26 की मार्च तिमाही में उसका एकीकृत शुद्ध लाभ सालाना आधार पर 19.17% बढ़कर 656.42 करोड़ रुपये हो गया। एवेन्यू सुपरमार्ट्स ने शेयर बाजार को बताया कि उसने एक साल पहले की जनवरी-मार्च तिमाही में 550.79 करोड़ का शुद्ध लाभ दर्ज किया था।

आरईसी पावर डेवलपमेंट एंड कंसल्टेंसी लिमिटेड
(आरईसी लिमिटेड के पूर्ण स्वामित्व का सहायक कंपनी)

वैश्विक आमंत्रण (इलेक्ट्रॉनिक बोली के माध्यम से)
टैरिफ के जरिए प्रतियोगिता बोली (टीबीसीबी) प्रक्रिया के माध्यम से 02 (दो) अंत-राज्यीय पारेषण परियोजनाओं के निर्माण, स्वामित्व, प्रचालन और हस्तांतरण (बीओओटी) आधारित पारेषण सेवा प्रदाता के चयन के लिए

आरईसी पावर डेवलपमेंट एंड कंसल्टेंसी लिमिटेड, नई दिल्ली, भारत (आरईसी लिमिटेड के पूर्ण स्वामित्व की सहायक कंपनी - एक महारत्न केंद्रीय सार्वजनिक उपक्रम) नीचे उल्लिखित पारेषण परियोजनाओं की स्थापना हेतु टी. बी. सी. बी. के अंतर्गत निर्माण, स्वामित्व, प्रचालन और स्थानांतरण (बूट) के आधार पर प्रस्ताव हेतु अनुरोध (आरएफपी) एक चरण दो लिफाफे वाली प्रक्रिया के तहत प्रस्ताव आमंत्रित करता है। इच्छुक बोलीदाता कृपया हमारी वेबसाइट्स www.recindia.nic.in तथा www.recpdcl.in पर 04.05.2026 से उपलब्ध "प्रस्ताव हेतु अनुरोध" (आरएफपी) अधिसूचना तथा आरएफपी दस्तावेज का अवलोकन करें।

बोलीदाता, आरएफपी दस्तावेज सभी कार्य दिवसों में 10.30 बजे (भा.मा.स) से 16.00 बजे (भा.मा.स) के बीच (04.05.2026 से प्रस्ताव जमा करने की तिथि से एक दिन पहले तक) हमारी वेबसाइट्स www.recindia.nic.in और www.recpdcl.in पर उपलब्ध सम्बंधित परियोजनाओं के आरएफपी दस्तावेज में दिए गए विवरण के अनुसार प्रत्येक पारेषण परियोजनाओं के लिए अप्रतिदेय गैर-वापसी योग्य शुल्क (₹5,00,000/- (पांच लाख रुपए केवल) या $7000 (यूएस डालर सात हजार केवल) + 18% जीएसटी) के भुगतान पर प्राप्त कर सकते हैं।

आरएफपी दस्तावेज हमारी वेबसाइट्स www.recindia.nic.in तथा www.recpdcl.in से भी डाउनलोड किया जा सकता है। तथापि, ऐसे मामले में इच्छुक पार्टी सम्बंधित आरएफपी दस्तावेज में दिए गए विवरण के अनुसार प्रत्येक पारेषण परियोजनाओं के लिए अप्रतिदेय गैर-वापसी योग्य शुल्क (₹5,00,000/- (पांच लाख रुपए केवल) या $7000 (यूएस डालर सात हजार केवल) + 18% जीएसटी) का अलग से भुगतान करने पर ही आरएफपी के उत्तर में प्रस्ताव जमा कर सकते हैं। सभी रिपोर्ट एवं आरएफपी दस्तावेजों के स्पष्टीकरण उन्हीं बोलीदाताओं को जारी किया जाएगा, जिन्होंने अपेक्षित शुल्क का भुगतान करके आरएफपी दस्तावेज प्राप्त किया या खरीदा है। इस सन्दर्भ में महत्वपूर्ण समय-सीमा इस प्रकार है:

क्र.सं.	परियोजना का नाम	स्पष्टीकरण मंगवाने की अंतिम तिथि	आरएफपी के उत्तर में प्रस्ताव जमा की अंतिम तिथि	आरएफपी प्रस्ताव खोलने का विवरण
1.	गुजरात में लकड़िया आरईजेड में आरई परियोजनाओं से विद्युत के एकीकरण के लिए पारेषण प्रणाली II-चरण (7500 मेगावाट)	25.05.2026	06.07.2026, 1500 बजे तक (भा.मा.स)	06.07.2026 को 1530 (भा.मा.स)
2.	लकड़िया (चरण-2: 7.5 गीगावाट), जाम खंभालिया (चरण-2: 5.5 गीगावाट) और जामनगर (चरण-1: 1 गीगावाट) से विद्युत निकासी के लिए सामान्य पारेषण प्रणाली भाग - छ	25.05.2026	06.07.2026, 1600 बजे तक (भा.मा.स)	06.07.2026 को 1630 (भा.मा.स)

बोली में सभी शुद्धिपत्र, अनुरोध, संशोधन, समय बढ़ाना आदि हमारी वेबसाइट्स www.recindia.nic.in तथा www.recpdcl.in पर होस्ट किए जाएंगे। नवीनतम जानकारी के लिए हमारी वेबसाइट का नियमित रूप से अवलोकन करते रहें।

नोट: आरईसीपीडीसीएल के पास बिना कोई कारण बताए तथा बिना किसी बाध्यता के बोली प्रक्रिया को रद्द या संशोधित करने का अधिकार सुरक्षित है। यह कोई पत्राचार नहीं है।

मुख्य कार्यपालक अधिकारी
आरईसी पावर डेवलपमेंट एंड कंसल्टेंसी लिमिटेड
कोर - 4, स्कोप कॉम्प्लेक्स, लोधी रोड, नई दिल्ली - 110003, भारत

बोली प्रक्रिया समन्वयक: REC Power Development, आरईसी पावर डेवलपमेंट एंड कंसल्टेंसी लिमिटेड
पहलकर्ता: विद्युत मंत्रालय भारत सरकार
पहलकर्ता भागीदार: केंद्रीय विद्युत प्राधिकरण

डॉ. संपत चंद्र के नेतृत्व में 36 घंटे लंबी जटिल सर्जरी से ट्यूमर हटा, चेहरे की कार्यक्षमता बहाल की और सुनने की क्षमता के लिए इम्प्लांट लगाया। दिपांजन अपनी मुस्कान व बोलने की क्षमता के साथ सुरक्षित बाहर आए। यह केस उन्नत चिकित्सा, टीमवर्क और उम्मीद की शक्ति का प्रेरक उदाहरण है।

आईआईएम कलकत्ता में एमबीएएक्स 20वें बैच का शुभारंभ

भारतीय प्रबंधन संस्थान कलकत्ता (आईआईएम कलकत्ता) ने अपने एक वर्षीय एमबीए प्रोग्राम (एमबीएएक्स) के 20वें बैच का शुभारंभ किया, जो आने वाले समूह के लिए एक नई शैक्षणिक यात्रा की शुरुआत है।

इस कार्यक्रम में प्रोफेसर आलोक कुमार राय, निदेशक, आईआईएम कलकत्ता; प्रोफेसर भास्कर चक्रवर्ती, डीन (अकादमिक पाठ्यक्रम); प्रोफेसर सुरेन सिस्ता, अध्यक्ष, एमबीएएक्स; और प्रोफेसर सुदर्शन कुमार, अध्यक्ष, कैरियर विकास और प्लेसमेंट कार्यालय ने भाग लिया। समारोह में मुख्य अतिथि के रूप में श्री केदार लेले, सीईओ भारत और अध्यक्ष दक्षिण एशिया, हेलियन ने मुख्य भाषण दिया। एमबीएएक्स बैच 20 में 12 महिलाओं सहित 91 प्रतिभागियों का एक विविध समूह शामिल है, जिसका औसत कार्य अनुभव 8.5 वर्ष है।

यूको बैंक का चौथा तिमाही लाभ 22.66% बढ़कर रु. 801 करोड़ हुआ

यूको बैंक ने 31 मार्च, 2026 को समाप्त तिमाही के लिए रु. 801 करोड़ का शुद्ध मुनाफा दर्ज किया, जो पिछले वर्ष की इसी अवधि के लिए रु. 653 करोड़ था, जो वर्ष-दर-वर्ष 22.66 प्रतिशत वृद्धि दर्ज करता है।

31 मार्च, 2026 को समाप्त तिमाही के लिए परिचालन लाभ रु. 1,573 करोड़ रहा।

31 मार्च, 2026 तक बैंक का कुल कारोबार रु. 5,90,314 करोड़ था, जो वर्ष-दर-वर्ष 14.95% की वृद्धि दर्ज करता है।

सकल अग्रिम वर्ष-दर-वर्ष 19.44 प्रतिशत बढ़कर रु. 2,62,752 करोड़ और कुल जमा 11.59 प्रतिशत वर्ष-दर-वर्ष बढ़कर रु. 3,27,[illegible] करोड़ रहा।

जीएलए का रिकॉर्ड प्लेसमेंट 411 छात्रों का दो दिग्गज कंपनियों में चयन

जीएलए विश्वविद्यालय ने एक बार फिर अपने उत्कृष्ट प्लेसमेंट रिकॉर्ड से नई ऊंचाइयों को छूते हुए बड़ा कीर्तिमान स्थापित किया है। कैपजेमिनी में बड़े चयन के बाद अब कॉग्नीजेंट और असेंचर जैसी दो दिग्गज कंपनियों में कुल 411 छात्रों का चयन हुआ है। कॉग्नीजेंट टेक्नोलॉजी कंपनी में बीटेक कंप्यूटर साइंस और बीटेक ईसी सीएस के 241 छात्रों का चयन 6.75 लाख रुपये तक के वार्षिक पैकेज पर हुआ है। वहीं असेंचर सर्विसेज कंपनी में बीटेक कंप्यूटर साइंस, बीटेक ईसी वीएलएसआई एवं एमसीए के 170 छात्रों का चयन 7 लाख रुपये तक के वार्षिक पैकेज पर हुआ है। जीएलए विश्वविद्यालय के कुलाधिपति नारायण दास अग्रवाल ने इस उपलब्धि पर प्रसन्नता व्यक्त की।

टाइम्स हायर एजुकेशन विश्व रैंकिंग 2026 में गलगोटियाज विश्वविद्यालय की छलांग

गलगोटियाज विश्वविद्यालय को प्रतिष्ठित टाइम्स हायर एजुकेशन (THE) वर्ल्ड यूनिवर्सिटी रैंकिंग 2026 में बड़ी मान्यता दी गई है। इससे दुनिया के उच्च शिक्षण संस्थानों के सबसे प्रतिष्ठित वैश्विक मूल्यांकनों में गलगोटियाज यूनिवर्सिटी की राष्ट्रीय और वैश्विक स्थिति को और मजबूत मिली है। भारत के 1,300 से अधिक विश्वविद्यालयों में से केवल 128 संस्थानों को टीएचई रैंकिंग के नवीनतम संस्करण में शामिल किया गया है। इन चुनिंदा संस्थानों में गलगोटियाज विश्वविद्यालय भी शामिल है, जिसे भारत के निजी विश्वविद्यालयों में 27वें स्थान पर रखा गया है।

कॉमिक बुक कॉन्स्टिट्यूशन का लोकार्पण

मध्य प्रदेश के इंदौर शहर में स्थित इंदौर इंस्टीट्यूट ऑफ लॉ द्वारा भारतरत्न डॉ. भीमराव अम्बेडकर की 135वीं जयंती के गौरवशाली दिन राष्ट्रीय राजधानी दिल्ली के सुप्रसिद्ध मावलंकर हॉल में अपनी तरह के एक अनूठे कार्यक्रम आयोजन सफलतापूर्वक किया गया।

'बचपन से पढ़े संविधान तो देश बने महान' की प्रेरणादायी टैगलाइन के साथ आयोजित इस समारोह में 'कॉन्स्टिट्यूशन कॉमिक बुक' एवं 'एलीना और महान संविधान' नामक पुस्तक श्रृंखला का भव्य विमोचन भी किया गया।

कार्यक्रम में मुख्य अतिथि के रूप में माननीय लोकसभा अध्यक्ष श्री ओम बिरला जी विशेष रूप से उपस्थित रहे, जबकि विशिष्ट अतिथि के रूप में मध्यप्रदेश शासन के नगरीय विकास, आवास एवं संसदीय कार्य मंत्री श्री कैलाश विजयवर्गीय जी की उपस्थिति रही।

हिन्दुस्तान
www.livehindustan.com

अपना बिजनेस

जमशेदपुर
सोमवार
4 मई 2026

17

ओपेक प्लस देशों का फैसला तेल बाजार पर असर डालेगा

अनुमान

वियना, एजेंसी। तेल उत्पादक देशों के समूह ओपेक प्लस ने संयुक्त अरब अमीरात (यूएई) के बाहर होने के बावजूद उत्पादन बढ़ाने का फैसला लिया है। इस मुद्दे पर रविवार को हुई अहम बैठक में समूह के सदस्य देशों के बीच जून के लिए करीब 1.88 लाख बैरल प्रति दिन उत्पादन बढ़ाने पर सहमति बन गई। हालांकि, विशेषज्ञों का कहना है कि इस फैसले का असर फिलहाल सीमित रहेगा।

यह लगातार तीसरा महीना है, जब समूह ने उत्पादन बढ़ाने का ऐलान किया है। वीडियो कॉन्फ्रेंस के जरिए हुई बैठक में सऊदी अरब, रूस, इराक, कुवैत, अल्जीरिया, कजाकिस्तान और ओमान जैसे सात देश हुए, लेकिन यूएई के बाहर होने का कोई जिक्र नहीं किया गया। इस मामले में ऊर्जा क्षेत्र के विशेषज्ञों का कहना है कि ओपेक प्लस का यह कदम केवल उत्पादन बढ़ाने तक सीमित नहीं है, बल्कि यह बाजार को भरोसा देने की कोशिश भी है कि वैश्विक तेल आपूर्ति पर समूह का नियंत्रण अभी भी बना हुआ है।

बाजार को फिलहाल फायदा नहीं होगा

विशेषज्ञों का कहना है कि यह फैसला दिखने में बड़ा लगता है, लेकिन इसका असर फिलहाल सीमित रहेगा। इसकी वजह है अमेरिका-ईरान युद्ध और हॉर्मुज जलमार्ग में बाधा जारी है। जब तक इस अहम समुद्री रास्ते से तेल की आवाजाही सामान्य नहीं होती, तब तक अतिरिक्त उत्पादन का फायदा बाजार तक नहीं पहुंच पाएगा।

इन देशों का उत्पादन पहले ही लक्ष्य से कम

रिपोर्ट के अनुसार, ओपेक प्लस का वास्तविक उत्पादन पहले ही तय लक्ष्य से काफी कम है। मार्च में समूह का उत्पादन करीब 2.76 करोड़ बैरल प्रतिदिन रहा, जबकि लक्ष्य 3.67 करोड़ बैरल प्रतिदिन था। यानी करीब 90 लाख बैरल प्रतिदिन की कमी बनी हुई है। इसमें सऊदी अरब और इराक में सबसे ज्यादा गिरावट दर्ज की गई। इसका मुख्य कारण युद्ध से जुड़ी बाधाएं हैं। इस बीच रूस, जो समूह का दूसरा सबसे बड़ा उत्पादक है, मौजूदा हालात से कुछ हद तक फायदा उठा रहा है, लेकिन वह भी अपने तय लक्ष्य तक उत्पादन बढ़ाने में संघर्ष कर रहा है।

कच्चे तेल में उछाल जारी

आपूर्ति में बाधा के चलते कच्चे तेल की कीमतें इस हफ्ते 125 डॉलर प्रति बैरल के पार पहुंच गईं, जो पिछले चार साल का उच्च स्तर है। इससे दुनियाभर में महंगाई बढ़ने और विमान ईंधन की कमी जैसी चिंताएं सामने आ रही हैं।

02 करोड़ बैरल प्रतिदिन से अधिक कच्चे तेल का उत्पादन किया समूह ने मार्च माह में, जो लक्ष्य से कम

बैंक कर्मियों का महंगाई भत्ता बढ़ा

नई दिल्ली, एजेंसी। सरकार ने बैंक कर्मियों के महंगाई भत्ते (डीए) में बढ़ोतरी कर दी है। यह नई दरें एक मई 2026 से प्रभावी हो चुकी हैं और जुलाई 2026 तक लागू रहेंगी। हालांकि, इस बार डीए में मामूली संशोधन किया गया है। मौजूदा संशोधन के तहत महंगाई भत्ता 25 प्रतिशत से बढ़ाकर 25.70 प्रतिशत कर दिया गया है।

कार्यालय – जिला शिक्षा अधीक्षक, पश्चिमी सिंहभूम, चाईबासा
दूरभाष नं0 :06582-355121, ई–मेल :chaibasamdm@gmail.com
नया समाहरणालय भवन, तृतीय तल्ला

आवश्यक सूचना

एतद् द्वारा सूचित किया जाता है कि निदेशक, प्राथमिक शिक्षा, स्कूली शिक्षा एवं साक्षरता विभाग, झारखण्ड, राँची के पत्रांक 14/ विविध–04/2025 613 दिनांक 27.04.2026 में दिये निदेशानुसार झारखण्ड कर्मचारी चयन आयोग द्वारा आयोजित झारखण्ड प्रारम्भिक विद्यालय प्रशिक्षित सहायक आचार्य संयुक्त प्रतियोगिता परीक्षा, 2023 अन्तर्गत इण्टरमीडिएट प्रशिक्षित सहायक आचार्य (कक्षा 01 से 06) एवं स्नातक प्रशिक्षित सहायक आचार्य (कक्षा 06 से 08) पद के अधियाचित रिक्त पदों के विरूद्ध अनुशंसित अभ्यर्थियों की कॉउन्सिलिंग हेतु दिनांक 04.05.2026 दिन (सोमवार) के पूर्वाह्न 10:00 बजे तिथि निर्धारित की जाती है।

स्थल – जिला शिक्षा अधीक्षक, कार्यालय, समाहरणालय परिसर, तृतीय तल्ला, पश्चिमी सिंहभूम, चाईबासा।

1. चयनित अभ्यर्थी को निदेश दिया जाता है कि पूर्ण रूपेन भरा हुआ जाँच पत्रक के साथ आवेदन के समय संलग्न किये गये सभी शैक्षणिक/प्रशैक्षणिक तथा अन्य दस्तावेजो की रंगीन छायाप्रति की स्वअभिप्रमाणित अभिलेख फोल्डर फाईल में कॉउन्सिलिंग के समय उपलब्ध करायेगें।
2. चयनित अभ्यर्थी कॉउन्सलिंग के समय सभी शैक्षणिक/प्रशैक्षणिक तथा अन्य दस्तावेज की मूल प्रति कॉउन्सिलिंग टीम के समक्ष उपस्थापित करेंगे।
3. चयनित अभ्यर्थी कॉउन्सलिंग के समय **5 पासपोर्ट साइज फोटो** कॉउन्सिलिंग टीम के समक्ष उपस्थापित करेंगे।
4. चयनित अभ्यर्थी को कॉउन्सिलिंग से संबंधित किसी प्रकार की जानकारी प्राप्त करना चाहे तो कार्यालय में स्थापित हेल्प डेस्क के कर्मी जिनका मोबाईल संख्या **9431182650 एवं 9905566653** है, पर संपर्क कर सकते है।

जिला शिक्षा अधीक्षक
पश्चिमी सिंहभूम, चाईबासा

PR 378896 East Singhbhum(26-27)#D

बंद एनपीएस खातों पर भी शुल्क लगेगा

बदलाव

नई दिल्ली, एजेंसी। पेंशन कोष नियामक और विकास प्राधिकरण (पीएफआरडीए) ने एनपीएस खातों पर लगने वाले सालाना शुल्क के नियमों को और स्पष्ट कर दिया है। अब अलग-अलग खाते और स्थितियों के हिसाब से शुल्क तय होंगे। साथ ही बंद या निष्क्रिय खाते पर भी शुल्क वसूला जाएगा। नए बदलाव सरकारी और निजी क्षेत्रों पर एक जुलाई से लागू होंगे।

पीएफआरडीए ने इस संबंध में हाल ही में सर्कुलर जारी किया है। इसका मकसद एनपीएस के अलग-अलग खातों और योजनाओं के बीच शुल्कों के ढांचे को एक समान बनाना और उन खामियों को दूर करना है, जिनकी वजह से अब शुल्क फीस वसूलने में असमानता थी। सबसे बड़ा बदलाव टियर-2 खाते में किया गया है। पहले टियर-1 और टियर-2 खातों के 'रखरखाव शुल्क' में अंतर होता था लेकिन नियामक ने दोनों के शुल्क को समान कर दिया है।

हालांकि, छोटे निवेशकों को थोड़ी राहत देते हुए यह प्रावधान किया गया है कि यदि टियर-2 खाते में शेष राशि 1,000 रुपये से कम है, तो एनपीएस सदस्य से शुल्क नहीं वसूला जाएगा।

अभी कितना शुल्क

1. **नए प्रान नंबर के लिए :** सरकारी और निजी क्षेत्र के सदस्यों के लिए 18 से 40 रुपये तक।
2. **सालाना रखरखाव शुल्क :** सरकारी कर्मियों के लिए 100 रुपये। निजी क्षेत्र के लिए कोष में जमा कुल रकम के आधार पर तय होता है। यह दो लाख तक 100 रुपये है। 10 लाख तक 150 रुपये, 25 लाख तक 300 रुपये और 50 लाख से ऊपर की रकम के लिए 500 रुपये हैं।

आरईसी पावर डेवलपमेंट एंड कंसल्टेंसी लिमिटेड
(आरईसी लिमिटेड के पूर्ण स्वामित्व का सहायक कंपनी)

वैश्विक आमंत्रण (इलेक्ट्रॉनिक बोली के माध्यम से)
टैरिफ के जरिए प्रतिस्पर्धात्मक बोली (टीबीसीबी) प्रक्रिया के माध्यम से 02 (दो) अंतर-राज्यीय पारेषण परियोजनाओं के निर्माण, स्वामित्व, प्रचालन और हस्तांतरण (बीओओटी) आधारित पारेषण सेवा प्रदाता के चयन के लिए

आरईसी पावर डेवलपमेंट एंड कंसल्टेंसी लिमिटेड, नई दिल्ली, भारत (आरईसी लिमिटेड के पूर्ण स्वामित्व की सहायक कंपनी - एक महारत्न केंद्रीय सार्वजनिक उपक्रम) नीचे उल्लिखित पारेषण परियोजनाओं की स्थापना हेतु टी. बी. सी. बी. के अंतर्गत निर्माण, स्वामित्व, प्रचालन और स्थानांतरण (बूट) के आधार पर प्रस्ताव हेतु अनुरोध (आरएफपी) एक चरण दो लिफाफे वाली प्रक्रिया के तहत प्रस्ताव आमंत्रित करता है। इच्छुक बोलीदाता कृपया हमारी वेबसाइट्स www.recindia.nic.in तथा www.recpdcl.in पर 04.05.2026 से उपलब्ध "प्रस्ताव हेतु अनुरोध" (आरएफपी) अधिसूचना तथा आरएफपी दस्तावेज का अवलोकन करें।

बोलीदाता, आरएफपी दस्तावेज सभी कार्य दिवसों में 10.30 बजे (भा.मा.स) से 16.00 बजे (भा.मा.स) के बीच (04.05.2026 से प्रस्ताव जमा करने की तिथि से एक दिन पहले तक) हमारी वेबसाइट्स www.recindia.nic.in और www.recpdcl.in पर उपलब्ध सम्बंधित परियोजनाओं के आरएफपी दस्तावेज में दिए गए विवरण के अनुसार प्रत्येक पारेषण परियोजनाओं के लिए अग्रिमदेय गैर-वापसी योग्य शुल्क (₹5,00,000/- (पांच लाख रुपए केवल) या $7000 (यूएस डालर सात हजार केवल) + 18% जीएसटी) के भुगतान पर प्राप्त कर सकते है।

आरएफपी दस्तावेज हमारी वेबसाइट्स www.recindia.nic.in तथा www.recpdcl.in से भी डाउनलोड किया जा सकता है। तथापि, ऐसे मामले में इच्छुक पार्टी सम्बंधित आरएफपी दस्तावेज में दिए गए विवरण के अनुसार प्रत्येक पारेषण परियोजनाओं के लिए अग्रिमदेय गैर-वापसी योग्य शुल्क (₹5,00,000/- (पांच लाख रुपए केवल) या $7000 (यूएस डालर सात हजार केवल) + 18% जीएसटी) का अलग से भुगतान करने पर ही आरएफपी के उत्तर में प्रस्ताव जमा कर सकते है। सर्व रिपोर्ट एवं आरएफपी दस्तावेजों के स्पष्टीकरण उनी बोलीदाताओं को जारी किया जाएगा, जिन्होंने अपेक्षित शुल्क का भुगतान करके आरएफपी दस्तावेज प्राप्त किया या खरीदा है। इस सन्दर्भ में महत्वपूर्ण समय-सीमा इस प्रकार है:

क्रम. सं.	परियोजना का नाम	स्पष्टीकरण मंगवाने की अंतिम तिथि	आरएफपी के उत्तर में प्रस्ताव जमा की अंतिम तिथि	आरएफपी प्रस्ताव खोलने का विवरण
1.	गुजरात में लकड़िया आरईजेड में आरई परियोजनाओं से विसृत के एकीकरण के लिए पारेषण प्रणाली II-चरण (7500 मेगावाट)	25.05.2026	06.07.2026, 1500 बजे तक (भा.मा.स)	06.07.2026 को 1530 (भा.मा.स)
2.	लकड़िया (चरण-2: 7.5 गीगावाट), जोम खंभालिया (चरण-2: 5.5 गीगावाट) और जामनगर (चरण-1: 1 गीगावाट) से विपुल निकासी के लिए सामान्य पारेषण प्रणाली भाग - ख	25.05.2026	06.07.2026, 1600 बजे तक (भा.मा.स)	06.07.2026 को 1630 (भा.मा.स)

बोली में सभी शुद्धिपत्र, अनुशेष, संशोधन, समय बढ़ाना आदि हमारी वेबसाइट्स www.recindia.nic.in तथा www.recpdcl.in पर होस्ट किए जाएंगे। नवीनतम जानकारी के लिए हमारी वेबसाइट को नियमित रूप से अवलोकन करते रहें।

नोट: आरईसीपीडीसीएल के पास बिना कोई कारण बताए तथा बिना किसी आश्वासन के बोली प्रक्रिया को रद्द या संशोधित करने का अधिकार सुरक्षित है। यह कोई पत्राचार नहीं है।

मुख्य कार्यपालक अधिकारी
आरईसी पावर डेवलपमेंट एंड कंसल्टेंसी लिमिटेड
कोर - 4, स्कोप कॉम्प्लेक्स, लोधी रोड, नई दिल्ली - 110003, भारत

बोली प्रक्रिया समन्वयक: REC Power Development — आरईसी पावर डेवलपमेंट एंड कंसल्टेंसी लिमिटेड
पहलकर्ता: विपुल मंत्रालय, भारत सरकार
पहलकर्ता भागीदार: केंद्रीय विपुल प्राधिकरण

कारोबारी चर्चा

कंज्यूमर कनेक्ट इनिशिएटिव

VGU का नवाचार आधारित इकोसिस्टम अंडरग्रेजुएट शिक्षा को दे रहा नया रूप

विवेकानंद ग्लोबल यूनिवर्सिटी (VGU), जयपुर अंडरग्रेजुएट शिक्षा का एक नया मॉडल विकसित कर रही है, जिसमें नवाचार को अतिरिक्त गतिविधि नहीं, बल्कि छात्र-यात्रा का एक संरचित अकादमिक हिस्सा बनाया गया है।

अनिवार्य ट्रांसडिसिप्लिनरी प्रोजेक्ट्स, इनोवेशन प्लेटफॉर्म, इन्क्यूबेशन सपोर्ट और उद्यमिता-आधारित मेंटरिंग के माध्यम से विश्वविद्यालय छात्रों को कक्षा के विचारों से आगे बढ़ाकर रिसर्च पेपर, कार्यशील प्रोटोटाइप, बौद्धिक संपदा और स्टार्टअप निर्माण तक ले जा रहा है। श्वे की विशेषता यह है कि इसका मॉडल किसी एक सेल या वार्षिक आयोजन तक सीमित नहीं है, बल्कि एक व्यापक इकोसिस्टम द्वारा समर्थित है।

इंस्टीट्यूशन इनोवेशन काउंसिल वर्षभर आइडिएशन एक्टिविटीज, स्टार्टअप इवेंट्स, जागरूकता सत्र और मेंटरशिप कार्यक्रमों के माध्यम से कैंपस में नवाचार की निरंतर धारा बनाए रखती है।

सिंघानिया विश्वविद्यालय CUET (UG) 2026 में हुआ शामिल

सिंघानिया विश्वविद्यालय, पचेरी बड़ी ने उच्च शिक्षा के क्षेत्र में एक महत्वपूर्ण कदम उठाते हुए Common University Entrance Test (CUET-UG) 2026 में स्वयं को शामिल कर लिया है। इसके साथ ही विश्वविद्यालय की प्रवेश प्रक्रिया को राष्ट्रीय स्तर का एक मजबूत मंच प्राप्त हुआ है। विश्वविद्यालय के विभिन्न स्नातक कार्यक्रमों में प्रवेश अब CUET के माध्यम से भी किया जा सकता है। CUET, जिसे नेशनल टेस्टिंग एजेंसी (NTA) द्वारा आयोजित किया जाता है। इस परीक्षा के माध्यम से छात्र एक ही

स्कोर के आधार पर कई विश्वविद्यालयों में आवेदन कर सकते हैं, जिससे उन्हें अलग-अलग प्रवेश परीक्षाओं से राहत मिलती है।

गाड़ी के शीशे पर फास्टैग नहीं लगाया तो रद्द होगा

नई दिल्ली, एजेंसी। राष्ट्रीय राजमार्ग प्राधिकरण (एनएचएआई) ने फॉस्टैग के नियम सख्त कर दिए हैं।

इसलिए सख्ती

एनएचएआई का कहना है कि कई बार देखा गया है कि एक ही फास्टैग

कार्यपालक अभियंता का कार्यालय,पेयजल एवं स्वच्छता प्रमंडल, चक्रधरपुर

अति अल्पकालीन ई० निविदा सूचना

निविदा सं० :- CKP/SR/03 /2026-27 (1st Call) Date :- 02.05.2026

1	विभाग का नाम	पेयजल एवं स्वच्छता विभाग, झारखण्ड, राँची।
2	वेबसाइट पर निविदा प्रकाशन की तिथि	दिनांक 05.05.2026 अपराह्न 05.00 बजे तक।
3	निविदा प्राप्ति (ऑन लाईन बिडींग) की अन्तिम तिथि एवं समय	दिनांक 12.05.2026 अपराह्न 5.00 बजे तक।
4	सरकार के सचिव, सूचना प्रौद्योगिकी एवं ई– गवर्नेंस, झारखण्ड मंत्रालय, के ज्ञापांक 120 दिनांक 03 .10.2023 के आलोक में विपत्र का मूल्य एवं अग्रधन की राशि Online जमा करने की अन्तिम तिथि एवं समय	दिनांक 12.05.2026 अपराह्न 05.00 बजे तक।
5	तकनीकी बिड खोलने की तिथि एवं समय	दिनांक 13.05.2026 अपराह्न 5.00 बजे तक।
6	निविदा आमंत्रित करने वाले पदाधिकारी का नाम एवं पता	कार्यपालक अभियंता का कार्यालय, पेयजल एवं स्वच्छता प्रमंडल, चक्रधरपुर।

36 घंटे, फिर से लौटी एक मुस्कान: रिकवरी के ज़रिए पुनर्जन्म की एक यात्रा

कोलकाता के 48 वर्षीय वकील दिपांजन भट्टाचार्जी की जिंदगी तब बदल गई जब 2018 में सुनने में कमी और बाद में सिरदर्द जैसे लक्षण सामने आए। पहली सर्जरी में केवल आंशिक ट्यूमर हट पाया, लेकिन 2025 में स्थिति फिर बिगड़ने के बाद उन्होंने बेंगलुरु के मणिपाल हॉस्पिटल का रुख किया, जहां

सिंह व अन्य।
नारायण के
र यथार्थ को
रावनारायण
तक है और
रस समाज
।
ाठ कि
वागत गान
ध्रुव कुमार
रुबी भूषण
ोक कुमार

कार्यक्रम का आयोजन करेगा

पटना, हिन्दुस्तान ब्यूरो। भाजपा वाणिज्य प्रकोष्ठ ने राज्यभर में प्रकोष्ठ की ओर से कार्यक्रम आयोजित करने का निर्णय लिया है।

प्रकोष्ठ के प्रदेश संयोजक प्रो जगन्नाथ प्रसाद गुप्ता की अध्यक्षता में हुई समीक्षा बैठक में विगत दिनों आयोजित भामा शाह जयंती समारोह की भव्य सफलता पर प्रसन्नता व्यक्त की गई।

संगठन की गतिविधियों में तेजी का फैसला

कार्यक्रम में आए अतिथियों के प्रति आभार व्यक्त किया गया।

वक्ताओं से मिले ऊर्जावान विचारों को प्रकोष्ठ की ओर से अपनाने पर बल दिया गया और तय हुआ कि संगठन की गतिविधियों को और तेज किया जाएगा। समीक्षा बैठक में प्रदेश सह-संयोजक अमृतेश कुमार गुप्ता, अजय कुमार गुप्ता, दिलीप कुमार गुप्ता, राजीव कुमार सिंह, संजीव कुमार पाल, नरेश महतो, देवेन्द्र कुमार गुप्ता, मिंटू जायसवाल, नागेंद्र बाबा, ओमप्रकाश गुप्ता, अरुण नटराज, प्रिंस कुमार गुप्ता, आकाश कुमार, त्रिलोकी कुमार, प्रियंका राय, मधु प्रिया, श्वेता सुमन, जयश्री भौमिक आदि मौजूद रहे।

ाठ कि
वागत गान
ध्रुव कुमार
रुबी भूषण
ोक कुमार

ूरी
गा

या कि ज़िले
में पहले से
15 योजनाएं
। इनमें जल
ग 6,000
ग्रामीण
ड़कें और
संरचना
ामिल हैं।
कार्यक्रम
या कि सभी
डों में लंबित
च कनीय
की जाएगी।
र्ष बरसात
तक पूरा
गया है।

बिहार सरकार

पुलिस अधीक्षक, यातायात का कार्यालय, पटना।
(गोपनीय शाखा)
E-mail :-sptraffic-pat-bih@gov.in, दूरभाष सं0–9031825817

यातायात प्लान

उप–महाप्रबंधक (तक0) के कार्यालय पत्रांक–BSTDCL/PIU/517, दिनांक–02.05.2026 के माध्यम से पटना जिलान्तर्गत गंगा नदी किनारे दीघा से दीदारगंज तक ल0–20.5 (कि0मी0) जे0पी0 गंगा पथ परियोजना अंर्तगत विभिन्न स्थानों पर Main carriage way एवं connecting bridge में bituminous concrete से संबंधित रखरखाव कार्य हेतु यातायात डायवर्जन प्लान साथ संलग्न करते हुए अनुमोदन हेतु अनुरोध किया गया है। समर्पित यातयात प्लान को अनुमोदित किया जाता है जो, निम्न प्रकार है।

1. **दिनांक–04.05.2026 को दीघा गोलम्बर से एल0सी0टी0 घाट तक उत्तरी फ्लैक मे वाहनों का परिचालन प्रतिबंधित रहेगा। उक्त लेन मे परिचालित वाहनों को दक्षिणी फ्लैक में परिचालित कराया जायेगा।**
2. **दिनांक–05.05.2026 को एल0सी0टी0 घाट से दीघा गोलम्बर तक दक्षिणी फ्लैक में वाहनों का परिचालन प्रतिबंधित रहेगा। उक्त लेन मे परिचालित वाहनों को उत्तरी फ्लैक में परिचालित कराया जायेगा।**

नोट :– उपरोक्त यातायात प्लान दिनांक–04.05.2026 एवं 05.05.2026 को समय 01:00 बजे अप0 से 03:00 बजे अप0 तक एवं रात्रि 10:00 बजे अप0 से 04:00 बजे पूर्वा0 तक के लिए प्रभावी रहेगा।

पुलिस अधीक्षक यातायात
पटना।

उक्त सूचना **state.bihar.gov.in/prdbihar** पर भी देखी जा सकती है।
PR. No.002240 (Police) 2026-27

नशे से बनानी दूरी है, क्योंकि परिवार जरूरी है।

सोलर उद्यमिता पर उद्यमिता–सह–कौशल विकास कार्यक्रम

9 दिवसीय आवासीय कार्यक्रम

इच्छुक युवाओं/युवतियों के लिए स्वरोजगार का सुनहरा अवसर

निःशुल्क

पंजीकरण तिथि: 05.05.2026 पूर्वाह्न 11:30 बजे तक
साक्षात्कार तिथि: 05.05.2026 अपराह्न 05:00 बजे तक
आयु– न्यूनतम 18 वर्ष,
दस्तावेज– पासपोर्ट साइज फोटो, आधार कार्ड, शैक्षिक दस्तावेज

कुल सीटें 120

कार्यक्रम निदेशक: **ज्योत्सना शरण**
स्थान: **AIC** बिहार विद्यापीठ सदाकत आश्रम, पटना, 800010 बिहार
Log on: www.niesbud.nic.in
Mob. 7631509065, 7033986752, 9334432540

आरईसी पावर डेवलपमेंट एंड कंसल्टेंसी लिमिटेड

(आरईसी लिमिटेड का पूर्ण स्वामित्व की सहायक कंपनी)

वैश्विक आमंत्रण (इलेक्ट्रॉनिक बोली के माध्यम से)

टैरिफ के जरिए प्रतिस्पर्धा बोली (टीबीसीबी) प्रक्रिया के माध्यम से 02 (दो) अंतर-राज्यीय पारेषण परियोजनाओं के निर्माण, स्वामित्व, प्रचालन और हस्तांतरण (बीओओटी) आधारित पारेषण सेवा प्रदाता के चयन के लिए

आरईसी पावर डेवलपमेंट एंड कंसल्टेंसी लिमिटेड, नई दिल्ली, भारत (आरईसी लिमिटेड के पूर्ण स्वामित्व की सहायक कंपनी - एक महारत्न केंद्रीय सार्वजनिक उपक्रम) नीचे उल्लिखित पारेषण परियोजनाओं की स्थापना हेतु टी. बी. सी. बी. के अंतर्गत निर्माण, स्वामित्व, प्रचालन और स्थानांतरण (बूट) के आधार पर प्रस्ताव हेतु अनुरोध (आरएफपी) एक चरण दो लिफाफे वाली प्रक्रिया के तहत प्रस्ताव आमंत्रित करता है। इच्छुक बोलीदाता कृपया हमारी वेबसाइट्स www.recindia.nic.in तथा www.recpdcl.in पर 04.05.2026 से उपलब्ध "प्रस्ताव हेतु अनुरोध" (आरएफपी) अधिसूचना तथा आरएफपी दस्तावेज का अवलोकन करें।

बोलीदाता, आरएफपी दस्तावेज सभी कार्य दिवसों में 10.30 बजे (भा.मा.स) से 16.00 बजे (भा.मा.स) के बीच (04.05.2026 से प्रस्ताव जमा करने की तिथि से एक दिन पहले तक) हमारी वेबसाइट्स www.recindia.nic.in और www.recpdcl.in पर उपलब्ध सम्बंधित परियोजनाओं के आरएफपी दस्तावेज में दिए गए विवरण के अनुसार प्रत्येक पारेषण परियोजनाओं के लिए अप्रतिदेय गैर-वापसी योग्य शुल्क (₹5,00,000/- (पांच लाख रुपए केवल) या $7000 (यूएस डालर सात हजार केवल) + 18% जीएसटी) के भुगतान पर प्राप्त कर सकते है।

आरएफपी दस्तावेज हमारी वेबसाइट्स www.recindia.nic.in तथा www.recpdcl.in से भी डाउनलोड किया जा सकता है। तथापि, ऐसे मामले में इच्छुक पार्टी सम्बंधित आरएफपी दस्तावेज में दिए गए विवरण के अनुसार प्रत्येक पारेषण परियोजनाओं के लिए अप्रतिदेय गैर-वापसी योग्य शुल्क (₹5,00,000/- (पांच लाख रुपए केवल) या $7000 (यूएस डालर सात हजार केवल) + 18% जीएसटी) का अलग से भुगतान करने पर ही आरएफपी के उत्तर में प्रस्ताव जमा कर सकते है। सर्व रिपोर्ट एवं आरएफपी दस्तावेजों के स्पष्टीकरण उन्हीं बोलीदाताओं को जारी किया जाएगा, जिन्होंने अपेक्षित शुल्क का भुगतान करके आरएफपी दस्तावेज प्राप्त किया या खरीदा है। इस सन्दर्भ में महत्वपूर्ण समय-सीमा इस प्रकार है:

क्रम. सं.	परियोजना का नाम	स्पष्टीकरण मंगवाने की अंतिम तिथि	आरएफपी के उत्तर में प्रस्ताव जमा की अंतिम तिथि	आरएफपी प्रस्ताव खोलने का विवरण
1.	गुजरात में लकड़िया आरईजेड में आरई परियोजनाओं से विद्युत के एकीकरण के लिए पारेषण प्रणाली II-चरण (7500 मेगावाट)	25.05.2026	06.07.2026, 1500 बजे तक (भा.मा.स)	06.07.2026 को 1530 (भा.मा.स)
2.	लकड़िया (चरण-2: 7.5 गीगावाट), जाम खंभालिया (चरण-2: 5.5 गीगावाट) और जामनगर (चरण-1: 1 गीगावाट) से विद्युत निकासी के लिए सामान्य पारेषण प्रणाली भाग - ख	25.05.2026	06.07.2026, 1600 बजे तक (भा.मा.स)	06.07.2026 को 1630 (भा.मा.स)

बोली में सभी शुद्धिपत्र, अनुशेष, संशोधन, समय बढ़ाना आदि हमारी वेबसाइट्स www.recindia.nic.in तथा www.recpdcl.in पर होस्ट किए जाएंगे। नवीनतम जानकारी के लिए हमारी वेबसाइट का नियमित रूप से अवलोकन करते रहें।

नोट: आरईसीपीडीसीएल के पास बिना कोई कारण बताए तथा बिना किसी बाध्यता के बोली प्रक्रिया को रद्द या संशोधित करने का अधिकार सुरक्षित है। यह कोई पेशकश नहीं है।

मुख्य कार्यपालक अधिकारी
आरईसी पावर डेवलपमेंट एंड कंसल्टेंसी लिमिटेड
कोर - 4, स्कोप कॉम्प्लेक्स, लोधी रोड, नई दिल्ली - 110003, भारत

बोली प्रक्रिया समन्वयक: REC Power Development — आरईसी पावर डेवलपमेंट एंड कंसल्टेंसी लिमिटेड
पहलकर्ता: विद्युत मंत्रालय भारत सरकार
पहलकर्ता भागीदार: केंद्रीय विद्युत प्राधिकरण

ANNEXURE P-6

सत्यमेव जयते

भारत सरकार

Government of India

विद्युत मंत्रालय

Ministry of Power

केन्द्रीय विद्युत प्राधिकरण

Central Electricity Authority

विद्युत प्रणाली योजना एवं मूल्यांकन - I प्रभाग

Power System Planning & Appraisal-I Division

सेवा में /**To,**

Shri. Vijay Kulkarni, Senior GM (T&D)
RECPDCL, D-Block, REC World Headquarter,
Plot No. I-4, Sector-29, Gurugram (Haryana) - 122001

विषय/**Subject: Constitution of the Bid Evaluation Committee (BEC) for the transmission schemes being implemented through TBCB -reg.**

संदर्भ / **References:**

(i) Gazette of India (Extraordinary) dated 12.02.2026
(ii) M/s RECPDCL letter dated 13.05.2026

महोदय/ Sir,

Ministry of Power vide Gazette notification under reference (i) has notified the following transmission schemes for implementation through tariff based competitive bidding (TBCB) with RECPDCL as the Bid Process Coordinator (BPC):

(i) Transmission system for Integration of Power from RE Projects in Lakadia REZ in Gujarat-Phase II (7500MW)

(ii) Common Transmission System for evacuation of power from Lakadia (Phase-II: 7.5GW), Jam Khambhaliya (Phase-II: 5.5GW) and Jamnagar (Phase-I: 1GW) - Part-B

M/s RECPDCL vide its letter under reference (ii) has requested CEA to constitute the Bid Evaluation Committee (BEC) for the above mentioned transmission schemes. Accordingly, CEA vide email dated 13.05.2026 sought nominations from WRPC for constitution of BEC.

Based on the nominations received from WRPC vide mail dated 05.06.2026, Bid Evaluation Committee (BEC) for evaluation of the bids of above mentioned transmission schemes is hereby constituted and is enclosed as **Annexure**. It may be mentioned that the Bid

File No. CEA-PS-11-16(13)/1/2024-PSPA-I Division-Part(1) (Computer No. 13086)
Generated from eOffice by AKSHATA YADAV, AD-I(AY)-PSP&A-I-CEA, ASSISTANT DIRECTOR-I (PSP&A-I), Central Electricity Authority(CEA) on 11/06/2026 01:05 PM

Evaluation Committee for the above mentioned transmission schemes have been constituted in line with Clause 9.8 of the Tariff based Competitive Bidding Guidelines for Transmission Service issued on 10.08.2021.

संलग्न / Encl. - उपरोक्त / as above

भवदीय / Yours faithfully,

Digitally signed by
Kanhaiya Singh Kushwaha
Date: 10-06-2026
18:04:19

(कन्हैया सिंह कुशवाहा / Kanhaiya Singh Kushwaha)

(उप निदेशक / Deputy Director)

Annexure

1) **Bid Evaluation Committee (BEC) for "Transmission system for Integration of Power from RE Projects in Lakadia REZ in Gujarat-Phase II (7500MW)":**

S. No.	Name	Designation
1.	Shri Amit Jog, General Manager, SBI Commercial Clients Group Regional Office -II, New Delhi	Chairman
2.	Shri A.B. Rathod, CE (SLDC), GETCO	Member
3.	Shri S.R. Parmar, I/c CE (P&C), GETCO	Member
4.	Shri Ganeswara Rao Jada, Director, PSPA-I Division, CEA	Member
5.	Ms Kavita Jha, Director, PSETD Division, CEA	Member
6.	Chairman of SPV constituted by RECPDCL	Convener - Member

2) **Bid Evaluation Committee (BEC) for "Common Transmission System for evacuation of power from Lakadia (Phase-II: 7.5GW), Jam Khambhaliya (Phase-II: 5.5GW) and Jamnagar (Phase-I: 1GW) - Part-B":**

S. No.	Name	Designation
1.	Shri Amit Jog, General Manager, SBI Commercial Clients Group Regional Office -II, New Delhi	Chairman
2.	Shri A.B. Rathod, CE (SLDC), GETCO	Member
3.	Shri Rajan Joshi, SE (STU), MSETCL	Member
4.	Shri Ganeswara Rao Jada, Director, PSPA-I Division, CEA	Member
5.	Ms Kavita Jha, Director, PSETD Division, CEA	Member
6.	Chairman of SPV constituted by RECPDCL	Convener -Member

REC Power Development and Consultancy Limited
(A wholly owned subsidiary of REC Limited, a 'Maharatna CPSE'
under Ministry of Power, Govt. of India)

REC Power Development

Ref. No. RECPDCL/TBCB/Inter-State/South Olpad-Nasik/2026-2027/1334 Date: 23.06.2026

The Chief Conservator of Forest,
Office of Chief Conservator of Forest,
Old Agra Rd, Mohan Nagar, Nashik, Maharashtra 422001

Sub: Forest Clearance for the construction of 765 kV transmission line covered under the project namely "Common Transmission System for evacuation of power from Lakadia (Phase-II: 7.5GW), Jam Khambhaliya (Phase-II: 5.5 GW) and Jamnagar (Phase-I: 1GW) - Part-B" to be implemented through Tariff Based Competitive Bidding Process.

Dear Sir,

The Ministry of Power, Government of India has initiated a scheme for development of Inter-State transmission system through Tariff Based Competitive Bidding process for evacuation of power from the Generating Stations, Transmission of power from pooling stations to other grid stations up to load centers and strengthening of transmission network.

In line with the above objective, the Ministry of Power, Government of India vide its Gazette Notification No CG-DL-E-19022026- 270309 dated 12.02.2026 has notified REC Power Development and Consultancy Limited (RECPDCL) to be the Bid Process Coordinator (BPC) for the purpose of Selection of Bidder as Transmission Service Provider to establish Inter-State transmission system for "Common Transmission System for evacuation of power from Lakadia (Phase-II: 7.5 GW), Jam Khambhaliya (Phase-II: 5.5GW) And Jamnagar (Phase-I: 1GW): Part-B" to be implemented through tariff based competitive bidding process under "Tariff Based Competitive Bidding Guidelines for Transmission Services and "Guidelines for Encouraging Competition in Development of Transmission Projects" (the Guidelines), issued by Ministry of Power, Govt. of India. The preliminary survey work for the referred transmission scheme has been completed by us.

The process inter-alia involves carrying out preliminary survey work, identification of route, preparation of survey report, and initiation of the process of seeking forest clearance and to conduct the bidding process for selection of developer for subject project.

The proposed transmission scheme comprises of the following elements:

- Establishment of 765/400 kV, 3x1500 MVA & 400/220 kV,3x500 MVA Nasik S/s
- South Olpad (GIS) – Nasik 765 kV D/C line
- Nasik – Pimpalgaon (MSETCL) 400 kV D/C line

RECPDCL has incorporated a SPV namely "**Jam Khambhaliya Jamnagar Power Transmission Limited**" (a wholly owned subsidiary of RECPDCL). All the approvals, consents, clearances etc. are to be obtained in the name of the SPV.

Based on the survey, forest clearance in favor of "**Jam Khambhaliya Jamnagar Power Transmission Limited**" as detailed in the table below, is essential for the implementation of the proposed 765 kV transmission line covered under the project. The specific details of the forest areas are mentioned in the survey report and the SOI Toposheet, which are enclosed herewith for your ready reference.

10/8/2026
आवक / जावक लिपीक
वनसंरक्षक (प्रादेशिक) नाशिक

D-Block, REC World Headquarter, Plot No. I-4, Sector-29, Gurugram, (Haryana) - 122001.
E-mail: co@recpdcl.in | Tel.: 0124-4441300 | www.recpdcl.in | CIN No. RECPDCL-U40101DL2007GOI165779 GST No. 06AADCR7399K1ZP

1. **Name of the transmission line:** South Olpad -Nashik 765 kV D/c line

Sl. No.	AP. No.	Latitude	Longitude	Forest Stretches (M)	Type of the Forest
1	AP246-AP269	20°38'44.42"N	73°23'32.56"E	9515	Reserved Forest
		20°35'32.11"N	73°27'18.77"E		
2	AP270-AP272	20°35'4.78"N	73°28'12.27"E	506	Reserved Forest
		20°34'51.71"N	73°28'19.73"E		
3	AP276-AP278	20°33'56.42"N	73°28'59.40"E	457	Reserved Forest
		20°33'42.65"N	73°29'3.29"E		
4	AP279-AP280	20°33'19.39"N	73°29'20.92"E	692	Reserved Forest
		20°32'58.23"N	73°29'29.20"E		
5	AP281-AP284	20°32'22.59"N	73°30'0.71"E	550	Reserved Forest
		20°32'10.14"N	73°30'9.62"E		
6	AP287-AP291	20°31'18.99"N	73°30'54.84"E	1619	Reserved Forest
		20°30'39.32"N	73°31'29.18"E		
7	AP293-AP296	20°28'58.27"N	73°31'49.62"E	1108	Reserved Forest
		20°29'16.07"N	73°32'14.86"E		
8	AP297-AP298	20°28'58.12"N	73°32'34.88"E	625	Reserved Forest
		20°28'44.01"N	73°32'48.89"E		
9	AP298-AP299	20°28'33.87"N	73°32'59.42"E	197	Reserved Forest
		20°28'29.75"N	73°33'5.00"E		
10	AP299-AP302	20°28'29.75"N	73°33'5.00"E	1600	Reserved Forest
		20°27'59.89"N	73°33'48.58"E		
11	AP304-AP306	20°27'48.93"N	73°34'6.98"E	465	Reserved Forest
		20°27'35.68"N	73°34'12.62"E		
12	AP307-AP309	20°27'14.93"N	73°34'58.43"E	540	Reserved Forest
		20°27'8.24"N	73°35'15.12"E		
13	AP313-AP316	20°25'45.06"N	73°36'11.43"E	1148	Reserved Forest
		20°25'12.22"N	73°36'18.58"E		
14	AP318-AP324	20°24'34.88"N	73°36'44.12"E	4334	Reserved Forest
		20°23'20.41"N	73°38'41.90"E		
15	AP341-AP348	20°19'42.85"N	73°47'38.80"E	6234	Reserved Forest
		20°18'58.07"N	73°51'2.37"E		
16	AP349-AP356	20°18'47.89"N	73°51'31.39"E	6055	Reserved Forest
		20°17'34.33"N	73°54'34.74"E		
Total Length of the forest area (In Meter)				**35645**	

In view of the above, forest clearance for the aforementioned sections if required, may kindly be accorded.

An early action in this regard is solicited.

धन्यवाद,

भवदीय,

23.06.26

(रत्नेश कुमार)
महाप्रबंधक (इंजीनियरिंग)

संलग्न :

1. Copy of Gazette notification dated 12.02.2026 issued by Ministry of Power, Government of India.
2. Survey report along with SOI Toposheets.

REC Power Development and Consultancy Limited
(A wholly owned subsidiary of REC Limited, a 'Maharatna CPSE'
under Ministry of Power, Govt. of India)

REC Power Development

Ref. No. RECPDCL/TBCB/Inter-State/Nasik/2026-2027/1335

Date: 23.06.2026

The District Collector,
Old Agra Road, Nashik,
Maharashtra - 422002

Sub: Allotment of land in respect of Jam Khambhaliya Jamnagar Power Transmission Limited for construction of 765/400 kV Nasik Substation covered under the inter-state transmission project namely "Common Transmission System for evacuation of power from Lakadia (Phase-II: 7.5GW), Jam Khambhaliya (Phase-II: 5.5GW) and Jamnagar (Phase-I: 1GW) - Part-B" to be implemented through Tariff Based Competitive Bidding Process.

Dear Sir,

The Ministry of Power, Government of India has initiated a scheme for development of Inter-State transmission system through Tariff Based Competitive Bidding process for evacuation of power from the Generating Stations, Transmission of power from pooling stations to other grid stations up to load centers and strengthening of transmission network.

Ministry of Power, Government of India vide its Gazette Notification No CG-DL-E-19022026-270309 dated 12.02.2026 has notified REC Power Development and Consultancy Limited (RECPDCL) to be the Bid Process Coordinator (BPC) for the purpose of selection of Bidder as Transmission Service Provider (TSP) to establish Inter-State transmission system i.e., "Common Transmission System for evacuation of power from Lakadia (Phase-II: 7.5 GW), Jam Khambhaliya (Phase-II: 5.5 GW) And Jamnagar (Phase-I: 1GW): Part-B" under the TBCB route.

The preliminary survey for the above transmission scheme has been completed by RECPDCL. The process includes route identification, land identification for substation construction, preparation of the survey report, initiation of land acquisition, and conduct of the bidding process for selection of the Transmission Service Provider for the subject project.

The proposed transmission scheme comprises of the following elements:

- Establishment of 765/400 kV, 3x1500 MVA & 400/220 kV, 3 x 500 MVA Nasik substation.
- South Olpad (GIS) – Nasik 765 kV D/c line
- Nasik – Pimpalgaon (MSETCL) 400 kV D/c line

RECPDCL has incorporated a Special Purpose Vehicle (SPV) named "**Jam Khambhaliya Jamnagar Power Transmission Limited**" (a wholly owned subsidiary of RECPDCL). All statutory approvals, consents, clearances and acquisition of land are to be obtained in the name of this SPV.

A total of **170 Acres** land is estimated/required for construction of 765/400 kV Nasik Substation.

Accordingly, approximately 170 Acres of land has been identified and tentative location of the substation as under:

Village: Panchale
Tehsil: Sinner

D-Block, REC World Headquarter, Plot No. I-4, Sector-29, Gurugram, (Haryana) - 122001.
E-mail: co@recpdcl.in | Tel.: 0124-4441300 | www.recpdcl.in | CIN No. RECPDCL-U40101DL2007GOI165779 GST No. 06AADCR7399K1ZP

District: Nashik
State: Maharashtra

All above information is based on the field visit and consultation with concerned Patwari. The toposheet indicating site location of substation and approach road is enclosed herewith for ready reference.

It is to inform that the successful Transmission Service Provider (TSP) will do the needful for acquisition of approx. **170 Acres** of land as per the above indicated land location for substation which may require to be considered for allotment in the name of the SPV "**Jam Khambhaliya Jamnagar Power Transmission Limited**" for establishment of 765/400 kV Nasik Substation in the Panchale Village of Sinner Tehsil, District- Nashik, Maharashtra.

धन्यवाद,

भवदीय,

23.03.26

(रत्नेश कुमार)
महाप्रबंधक (इंजीनियरिंग)

संलग्न :

1. Copy of Gazette notification dated 12.02.2026 issued by Ministry of Power, Government of India.
2. Survey report along with SOI Toposheets.

REC Power Development and Consultancy Limited
(A wholly owned subsidiary of REC Limited, a 'Maharatna CPSE'
under Ministry of Power, Govt. of India)

REC Power Development

Ref. No. RECPDCL/TBCB/Inter-State/South Olpad-Nasik/2026-2027/1336 Date: 23.06.2026

The Deputy Conservator of Forests,
Van Bhavan, Shivaji Chowk, Gangeshwar-
Mahadev Road, Adajan, Surat-395009

Sub: Forest Clearance for the construction of 765 kV transmission line covered under the project namely "Common Transmission System for evacuation of power from Lakadia (Phase-II: 7.5GW), Jam Khambhaliya (Phase-II: 5.5GW) and Jamnagar (Phase-I: 1GW) - Part-B" to be implemented through Tariff Based Competitive Bidding Process.

Dear Sir,

The Ministry of Power, Government of India has initiated a scheme for development of Inter-State transmission system through Tariff Based Competitive Bidding process for evacuation of power from the Generating Stations, Transmission of power from pooling stations to other grid stations up to load centers and strengthening of transmission network.

In line with the above objective, the Ministry of Power, Government of India vide its Gazette Notification No CG-DL-E-19022026- 270309 dated 12.02.2026 has notified REC Power Development and Consultancy Limited (RECPDCL) to be the Bid Process Coordinator (BPC) for the purpose of Selection of Bidder as Transmission Service Provider to establish Inter-State transmission system for "Common Transmission System for evacuation of power from Lakadia (Phase-II: 7.5 GW), Jam Khambhaliya (Phase-II: 5.5GW) And Jamnagar (Phase-I: 1GW): Part-B" to be implemented through tariff based competitive bidding process under "Tariff Based Competitive Bidding Guidelines for Transmission Services and "Guidelines for Encouraging Competition in Development of Transmission Projects" (the Guidelines), issued by Ministry of Power, Govt. of India. The preliminary survey work for the referred transmission scheme has been completed by us.

The process inter-alia involves carrying out preliminary survey work, identification of route, preparation of survey report, and initiation of the process of seeking forest clearance and to conduct the bidding process for selection of developer for subject project.

The proposed transmission scheme comprises of the following elements:

- Establishment of 765/400 kV, 3 x 1500 MVA & 400/220 kV,3x500 MVA Nasik Substation
- South Olpad (GIS) – Nasik 765 kV D/c line
- Nasik – Pimpalgaon (MSETCL) 400 kV D/c line

RECPDCL has incorporated a SPV namely "**Jam Khambhaliya Jamnagar Power Transmission Limited**" (a wholly owned subsidiary of RECPDCL). All the approvals, consents, clearances etc. are to be obtained in the name of the SPV.

ટપાલ કારકુન
નાયબ વન સંરક્ષકશ્રીની કચેરી,
સુરત વન વિભાગ, સુરત.

SOI Toposheet મળેલ છે
11/06/26

Based on the survey, forest clearance in favor of "**Jam Khambhaliya Jamnagar Power Transmission Limited**" as detailed in the table below, is essential for the implementation of the proposed 765 kV transmission line covered under the project. The specific details of the forest areas are mentioned in the survey report and the SOI Toposheet, which are enclosed herewith for your ready reference.

D-Block, REC World Headquarter, Plot No. I-4, Sector-29, Gurugram, (Haryana) - 122001.
E-mail: co@recpdcl.in | Tel.: 0124-4441300 | www.recpdcl.in | CIN No. RECPDCL-U40101DL2007GOI165779 GST No. 06AADCR7399K1ZP

1. **Name of the transmission line:** South Olpad -Nashik 765 kV D/c line

Sl. No.	AP. No.	Latitude	Longitude	Forest Stretches (M)	Type of the Forest
1.	AP155-AP156	20°52'43.86"N	73°16'39.77"E	260	Reserved Forest
		20°52'34.13"N	73°16'48.64"E		
2.	AP156-AP157	20°52'19.52"N	73°17'4.84"E	85	Reserved Forest
		20°52'18.44"N	73°17'7.51"E		
Total Length of the forest area (In Meter)				**345**	

In view of the above, forest clearance for the aforementioned sections if required, may kindly be accorded.

An early action in this regard is solicited.

धन्यवाद,

भवदीय,

23.06.26

(रत्नेश कुमार)
महाप्रबंधक (इंजीनियरिंग)

संलग्न :

1. Copy of Gazette notification dated 12.02.2026 issued by Ministry of Power, Government of India.
2. Survey report along with SOI Toposheets.

REC Power Development and Consultancy Limited
(A wholly owned subsidiary of REC Limited, a 'Maharatna CPSE'
under Ministry of Power, Govt. of India)

REC Power Development

Ref. No. RECPDCL/TBCB/Inter-State/South Olpad-Nasik/2026-2027/1337 Date: 23.06.2026

The Deputy Forest protection Officer
209, Venketeshwar Apartment, Opp. Navsari District Court,
Junathana, Kaliawadi, Navsari, Gujarat 396445

Sub: Forest Clearance for the construction of 765 kV transmission line covered under the project namely "Common Transmission System for evacuation of power from Lakadia (Phase-II: 7.5GW), Jam Khambhaliya (Phase-II: 5.5GW) and Jamnagar (Phase-I: 1GW) - Part-B" to be implemented through Tariff Based Competitive Bidding Process.

Dear Sir,

The Ministry of Power, Government of India has initiated a scheme for development of Inter-State transmission system through Tariff Based Competitive Bidding process for evacuation of power from the Generating Stations, Transmission of power from pooling stations to other grid stations up to load centers and strengthening of transmission network.

In line with the above objective, the Ministry of Power, Government of India vide its Gazette Notification No CG-DL-E-19022026- 270309 dated 12.02.2026 has notified REC Power Development and Consultancy Limited (RECPDCL) to be the Bid Process Coordinator (BPC) for the purpose of Selection of Bidder as Transmission Service Provider to establish Inter-State transmission system for "Common Transmission System for evacuation of power from Lakadia (Phase-II: 7.5 GW), Jam Khambhaliya (Phase-II: 5.5 GW) And Jamnagar (Phase-I: 1 GW): Part-B" to be implemented through tariff based competitive bidding process under "Tariff Based Competitive Bidding Guidelines for Transmission Services and "Guidelines for Encouraging Competition in Development of Transmission Projects" (the Guidelines), issued by Ministry of Power, Govt. of India. The preliminary survey work for the referred transmission scheme has been completed by us.

The process inter-alia involves carrying out preliminary survey work, identification of route, preparation of survey report, and initiation of the process of seeking forest clearance and to conduct the bidding process for selection of developer for subject project.

The proposed transmission scheme comprises of the following elements:

- Establishment of 765/400 kV, 3 x 1500 MVA & 400/220 kV, 3 x 500 MVA Nasik Substation
- South Olpad (GIS) – Nasik 765 kV D/c line
- Nasik – Pimpalgaon (MSETCL) 400 kV D/c line

RECPDCL has incorporated a SPV namely "**Jam Khambhaliya Jamnagar Power Transmission Limited**" (a wholly owned subsidiary of RECPDCL). All the approvals, consents, clearances etc. are to be obtained in the name of the SPV.

Based on the survey, forest clearance in favor of "**Jam Khambhaliya Jamnagar Power Transmission Limited**" as detailed in the table below, is essential for the implementation of the proposed 765 kV transmission line covered under the project. The specific details of the forest areas are mentioned in the survey report and the SOI Toposheet, which are enclosed herewith for your ready reference.

D-Block, REC World Headquarter, Plot No. I-4, Sector-29, Gurugram, (Haryana) - 122001.
E-mail: co@recpdcl.in | Tel.: 0124-4441300 | www.recpdcl.in | CIN No. RECPDCL-U40101DL2007GOI165779 GST No. 06AADCR7399K1ZP

1. **Name of the transmission line:** South Olpad -Nashik 765 kV D/c line

Sl. No.	AP. No.	Latitude	Longitude	Forest Stretches (M)	Type of the Forest
1.	AP218 – AP223	20°43'3.56"N	73°19'40.21"E	1416	Reserved Forest
		20°42'26.67"N	73°20'5.93"E		
2.	AP229 – AP232	20°41'2.50"N	73°20'44.62"E	720	Reserved Forest
		20°40'42.07"N	73°20'53.14"E		
3	AP235 – AP242	20°40'13.53"N	73°21'37.68"E	2688	Reserved Forest
		20°39'28.32"N	73°22'54.58"E		
Total Length of the forest area (In Meter)				**4824**	

In view of the above, forest clearance for the aforementioned sections if required, may kindly be accorded.

An early action in this regard is solicited.

धन्यवाद,

भवदीय,

24.06.26

(रत्नेश कुमार)
महाप्रबंधक (इंजीनियरिंग)

संलग्न :

1. Copy of Gazette notification dated 12.02.2026 issued by Ministry of Power, Government of India.
2. Survey report along with SOI Toposheets.

ANNEXURE P-8

Celgall
PURSUIT WITH EXCELLENCE
(As ISO : 9001-2008 Certified Company)
CIN-L45201PB2002PLC025257

ANNEXURE 1 - COVERING LETTER

Date: 20-07-2026
From: Ceigall India Limited
452, Udyog Vihar, Phase-V,
Near GPO-Gurugram, Gurugram – 122016, Haryana
Tel No: 9630085259
Fax No: 161-4623666
E-mail: tenders@ceigall.co

To,
Chief Executive Officer,
REC Power Development and Consultancy Limited
(A wholly owned subsidiary of REC Limited)
REC Corporate Head Quarter,
D Block, Plot No. I – 4,
Sec – 29 Gurugram – 122 001

Dear Sir,

Sub: **Bid for selection of Bidder as Transmission Service Provider to establish Inter-State Transmission Scheme i.e., "Common Transmission System for evacuation of power from Lakadia (Phase-II: 7.5GW), Jam Khambhaliya (Phase-II: 5.5GW) and Jamnagar (Phase-I: 1GW) - Part-B" through tariff based competitive bidding process.**

1. Being duly authorized to present and act on behalf of **M/s Ceigall India Limited** (insert name of Bidding Company / ~~Bidding Consortium)~~ (hereinafter called the "Bidder") and having read and examined in detail the Request for Proposal (RFP) document, the undersigned hereby submit our Technical Bid **with** duly signed formats and Financial Bid (Initial Offer) as stipulated in RFP document for your consideration.

2. It is confirmed that our Bid is consistent with all the requirements of submission as stated in the RFP document and subsequent clarifications/amendments as per Clause 2.3 and 2.4 of RFP.

3. The information submitted in our Bid is complete, is strictly as per the requirements stipulated in the RFP document and is correct to the best of our knowledge and understanding. We would be solely responsible for any errors or omissions in our Bid.

4. We hereby agree and undertake to procure the products associated with the Transmission System as per provisions of Public Procurement (Preference to Make in India) orders issued by Ministry of Power vide orders No. 11/5/2018 - Coord. dated 28.07.2020 for transmission sector, as amended vide order No. A-1/2021-FSC- Part(5) dated 16.11.2021 and No.: P45021/2/2017-PP (BE-II)-Part-4 Vol.II dated 19.07.2024 issued by Ministry of Power for transmission sector, as may be further amended from time to time read with Department for Promotion of Industry and Internal Trade (DPIIT) orders in this regard We hereby also agree and undertake to comply with Department of Expenditure, Ministry of Finance revised OM dated 23.02.2023 issued in suppression of Order (Public Procurement No 1) bearing File No. 6/18/2019-PPD

dated 23.07.2020, Order (Public Procurement No 2) bearing File No. 6/18/2019-PPD dated 23.07.2020 and Order (Public Procurement No. 3) bearing File No. 6/18/2019-PPD, dated 24.07.2020, Office Memorandum (OM) No. F.18/37/2020-PPD dated 08.02.2021, OM No. F.12/1/2021- PPD(Pt.) dated 02.03.2021, OM No. F.7/10/2021-PPD dated 08.06.2021 and Order (Public Procurement No 4) bearing File No. F.7/10/2021-PPD dated 23.02.2023 as amended from time to time, regarding public procurement from a bidder of a country, which shares land border with India.

5. We hereby agree to comply with Ministry of Power order no. 25-11/6/2018 – PG dated 02.07.2020 as amended from time to time.

6. We are herewith submitting legally binding board resolution for the total equity requirement of the Project.

7. We hereby confirm that in accordance with Clause 2.1.4 of the RFP, we are herewith submitting legally binding undertaking supported by a board resolution from the ……..(Insert name of Technically Evaluated Entity and/or Financially Evaluated Entity or its Ultimate Parent Company, as the case may be) that all the equity investment obligations of **Ceigall India Limited** (Insert name of the Bidding Company) shall be deemed to be equity investment obligations of the …… (Insert name of Technically Evaluated Entity and/or Financially Evaluated Entity or its Ultimate Parent Company, as the case may be) and in the event of any default by **Ceigall India Limited** (Insert name of the Bidding Company), the same shall be met by …… (Insert name of Technically Evaluated Entity and/or Financially Evaluated Entity or its Ultimate Parent Company, as the case may be). **–(Not Applicable)**

[Sl. No 7 to be inserted only in case the Bidder is a Bidding Company / Lead Member of a Consortium and has sought qualification on the basis of technical and financial capability of its Affiliate(s) and/or its Parent]

8. We confirm that there are no litigations or disputes against us, which materially affect our ability to fulfill our obligations with regard to the Project.

9. We hereby confirm that we shall continue to maintain compliance with Qualification Requirements till the execution of the Transmission Service Agreement. Further, in case we emerge as Selected Bidder for the Project, we shall continue to maintain compliance with Qualification Requirements till the COD of the Project.

10. We confirm that we have studied the provisions of relevant Indian laws and regulations required to enable us to build, own, operate and transfer the said Project and to prepare this Bid.

11. We hereby confirm that we shall abide unreservedly with BPC' s decision in the qualification process for selection of Qualified Bidder and further warrant that under no circumstances we shall challenge either the BPC' s decision or its right to make such decision at any time in the future.

12. We confirm that the Bid shall remain valid for a period of one eighty (180) days from the Bid Deadline.

CEIGALL INDIA LIMITED

13. The details of contact person are furnished as under:

Name:	Chandan Singh
Designation:	Authorized Signatory
Name of the Company:	Ceigall India Limited
Address of the Bidder:	452, Udyog Vihar, Phase – V, Near GPO-Gurugram, Behind Enkay Tower, Gurugram – 1210016, Haryana
Phone Nos.:	9630085259
Fax No:	161-4623666
E-mail:	tenders@ceigall.co

14. **Bid Bond**

We have enclosed a Bid Bond of Rs. **36 Crores** (Rupees Thirty Six Crore only) in the form of insurance surety bond no **12-6621-0010397900-00 dated 20.07.2026** as per your proforma (Annexure-14A) from **Bajaj General Insurance Limited** and valid up to in terms of Clause 2.11 of the RFP.

15. **Acceptance**

We hereby unconditionally and irrevocably agree and accept that the decision made by the BPC on any matter regarding or arising out of the RFP shall be binding on us. We hereby expressly waive any and all claims in respect of Bid process.

16. **Familiarity With Relevant Indian Laws & Regulations**

We confirm that we have studied the provisions of relevant Indian laws and regulations as required to enable us to submit this Bid and execute the RFP Project Documents (other than TSA), in the event of our selection as the TSP. We further undertake and agree that all such factors as mentioned in Clause 2.5.7 of RFP have been fully examined and considered while submitting the Bid.

It is confirmed that our Bid is consistent with all the requirements of submission as stated in the RFP and subsequent communications from BPC.

The information submitted in our Bid is complete, strictly as per the requirements stipulated in the RFP and is correct to the best of our knowledge and understanding. We would be solely responsible for any errors or omissions in our Bid.

We confirm that we have not taken any deviation so as to be deemed non-responsive with respect to the provisions stipulated at Clause 2.5.1, of this RFP.

Thanking you,
Yours sincerely,

CEIGALL INDIA LIMITED

(Signature)

Name:	Chandan Singh
Designation:	Authorized Signatory
Company:-	Ceigall India Limited
Address:	452, Udyog Vihar Phase – V, Near GPO-Gurugram, Behind Enkay Tower, Gurugram 122016, Haryana

Date: 20-07-2026
Place: Gurugram

EIGALL INDIA LIMITED

ANNEXURE P-9

No. 25-17/115/2026-POWER GRID(MoP)
संख्या 25-17/115/2026-पावर ग्रिड(एमओपी)

भारत सरकार
Government of India
विद्युत मंत्रालय
Ministry of Power
***

Shram Shakti Bhawan, Rafi Marg
New Delhi, Dated 8th September, 2026

To,

Shri Arun Kumar Chaturvedi, Director,
M/s Jam Khambhaliya Jamnagar Power Transmission Limited,
Core-4, SCOPE Complex,
7 Lodhi Road, New Delhi – 110003.

Subject: Prior approval of the Government of India under Section 68 (1) of the Electricity Act, 2003, to M/s Jam Khambhaliya Jamnagar Power Transmission Limited for installation of the overhead transmission lines under the transmission scheme "Common Transmission System for evacuation of power from Lakadia (Phase-II: 7.5GW), Jam Khambhaliya (Phase-II: 5.5GW) and Jamnagar (Phase-I: 1GW) – Part B"- regarding.

Sir,

I am directed to refer to REC Power Development Consultancy Limited (RECPDCL)'s online application on NSWS portal vide application ID SW4493741278-M029_D002_A003-1782310412820 dated 24.06.2026, seeking prior approval of Government of India under Section 68(1) of the Electricity Act, 2003, in favour of M/s Jam Khambhaliya Jamnagar Power Transmission Limited (a wholly owned subsidiary of REC Power Development Consultancy Limited) for installation of the following overhead transmission lines under the transmission scheme "Common Transmission System for evacuation of power from Lakadia (Phase-II: 7.5GW), Jam Khambhaliya (Phase-II: 5.5GW) and Jamnagar (Phase-I: 1GW) – Part B":

- South Olpad (GIS) – Nasik 765 kV D/c line.
- Nasik – Pimpalgaon (MSETCL) 400 kV D/c line.

2. Ministry of Power vide Gazette no. CG-DL-E-19022026-270309 (No.687) dated 12.02.2026 has appointed REC Power Development Consultancy Limited (RECPDCL) as Bid Process Coordinator for the purpose of selection of Bidder as Transmission Service Provider (TSP) to establish the transmission scheme "Common Transmission System for evacuation of power from Lakadia (Phase-II: 7.5GW), Jam Khambhaliya (Phase-II: 5.5GW) and Jamnagar (Phase-I: 1GW) – Part B" to be implemented through Tariff Based Competitive Bidding (TBCB) route. REC Power Development Consultancy Limited (RECPDCL), the Bid Process Coordinator, has incorporated the SPV, M/s Jam Khambhaliya Jamnagar Power Transmission Limited', for implementation of the above mentioned transmission scheme.

3. M/s Jam Khambhaliya Jamnagar Power Transmission Limited has submitted an Undertaking dated 03.09.2026 stating that the route of above-mentioned overhead line would fall outside the Revised GIB Priority Area of Gujarat as referred in judgment of Hon'ble Supreme Court of India dated 19.12.2025 in Writ Petition (Civil) No. 838 of 2019, regarding GIB (Great Indian Bustard) case. Also, M/s Jam Khambhaliya Jamnagar Power Transmission Limited would comply with the directions of Hon'ble Supreme Court of India in its order dated 19.12.2025 in Writ Petition (Civil) No. 838 of 2019, including the optimization of route of the dedicated/ISTS line(s).

contd/...

4. Ministry of Power, Government of India on the basis of the recommendation of Central Electricity Authority (CEA), conveys the prior approval under Section 68 (1) of the Electricity Act, 2003 to the SPV, M/s Jam Khambhaliya Jamnagar Power Transmission Limited for installation of the following overhead transmission lines under the transmission scheme "Common Transmission System for evacuation of power from Lakadia (Phase-II: 7.5GW), Jam Khambhaliya (Phase-II: 5.5GW) and Jamnagar (Phase-I: 1GW) - Part B":

- South Olpad (GIS) – Nasik 765 kV D/c line *(Line length is 240 km approx.)*
- Nasik – Pimpalgaon (MSETCL) 400 kV D/c line *(Line length is 80 km approx.)*

5. The approval would be subject to compliance of:

(i) The relevant provisions of the Electricity Act, 2003, as amended from time to time and the rules and regulations made there under, and

(ii) CEA (Measures relating to Safety and Electric Supply) Regulations, 2023, and any subsequent amendments made thereto.

(iii) The directions of Hon'ble Supreme Court of India in its order dated 19.12.2025 in Writ Petition (Civil) No. 838 of 2019, including the optimization of route of the overhead lines and any other directions given by competent authorities in pursuance of the above order by the Hon'ble Supreme Court.

6. The approval would also be subject to the following conditions:

(i) The implementing agency will commence construction of the project within three years of grant of approval, unless this term is extended by Ministry of Power.

(ii) Ministry of Power may withdraw the approval before the expiry of the period of three years after giving a one-month notice.

(iii) The implementing agencies shall abide by the provisions of Works of Licensees Rules, 2006 notified by the Govt. of India, Ministry of Power in the Gazette of India, extra-ordinary Part-II, Section 3(i) dated 18-04-2006 (vide GSR 217 (E) dated 18-04-2006).

Yours faithfully,

MVNVara Prasad

(M.V.N. Vara Prasad/ एम.वी.एन. वरा प्रसाद)
Under Secretary to the Government of India
Tele: 011-23730264

Copy to:

The Chairperson
Central Electricity Authority
Sewa Bhawan, R.K. Puram, New Delhi 110066.

***

REC Power Development and Consultancy Limited
(A wholly owned subsidiary of REC Limited, a 'Maharatna CPSE'
under Ministry of Power, Govt. of India)

REC Power Development

Ref.:RECPDCL/TBCB/Lakadia_Phase_II &Lakadia_Part_B/2026-27/537 दिनांक: 07.05.2026

सेक्रेटरी,
केन्द्रीय विद्युत विनियामक आयोग,
6वीं, 7वीं और 8वीं मंजिल, टावर-बी, वर्ल्ड ट्रेड सेंटर
नौरोजी नगर, तीसरा नई दिल्ली – 110029

Subject: Global Invitation for selection of Transmission Service Provider to establish Transmission system for the projects namely "Common Transmission System for evacuation of power from Lakadia (Phase-II: 7.5GW), Jam Khambhaliya (Phase-II: 5.5GW) and Jamnagar (Phase-I: 1GW) - Part-B" & "Transmission system for Integration of Power from RE Projects in Lakadia REZ in Gujarat-Phase II (7500MW)" **-Copy of RFP documents.**

महोदय,

Kind reference is invited to the Gazette Notification No.CG-DL-E-19022026-270309 dated 12.02.2026, issued by Ministry of Power, Government of India wherein REC Power Development and Consultancy Limited has been appointed as Bid Process Coordinator (BPC) for selection of bidder as Transmission Service Provider to establish Inter-State transmission projects on Build, Own, Operate & Transfer (BOOT) basis.

In this regard, we would like to intimate that the RFP process for the subject cited projects have been initiated by way of Global Invitation in National/International newspapers i.e. Hindustan Times Package on 04.05.2026 & Financial Times Package on 07.05.2026. The important timelines in this regard are as below. :-

Sr. No.	Name of the Project	Last date of RFP Purchase	Last date for submission of response to RFP
1.	Common Transmission System for evacuation of power from Lakadia (Phase-II: 7.5GW), Jam Khambhaliya (Phase-II: 5.5GW) and Jamnagar (Phase-I: 1GW) - Part-B	03.07.2026	06.07.2026 up to 1500 Hrs (IST)
2.	Transmission system for Integration of Power from RE Projects in Lakadia REZ in Gujarat-Phase II (7500MW)	03.07.2026	06.07.2026 up to 1600 Hrs (IST)

The RfP notification and RfP document for the above projects have also been uploaded on our websites www.recindia.nic.in and www.recpdcl.in.

In this regard, copy of Request for Proposal (RfP), Transmission Service Agreement (TSA) and Share Purchase Agreement (SPA) along with copies of newspaper notification of the subject projects are enclosed herewith for your kind information and reference please.

धन्यवाद,

भवदीय,

(विजय कुलकर्णी)

वरिष्ठ महाप्रबंधक एवं विभागाध्यक्ष (टी & डी)

संलग्न: जैसा कि ऊपर बताया गया है

REC Power Development and Consultancy Limited
(A wholly owned subsidiary of REC Limited, a 'Maharatna CPSE'
under Ministry of Power, Govt. of India)

REC Power Development

Ref.:RECPDCL/TBCB/Lakadia_Phase_II &Lakadia_Part_B/2026-27/538

दिनांक: 07.05.2026

निदेशक (ट्रांसडेस्क)
ऊर्जा मंत्रालय,
श्रमशक्ति भवन, रफी मार्ग, नई दिल्ली-110001

Subject: Global Invitation for selection of Transmission Service Provider to establish Transmission system for the projects namely "Common Transmission System for evacuation of power from Lakadia (Phase-II: 7.5GW), Jam Khambhaliya (Phase-II: 5.5GW) and Jamnagar (Phase-I: 1GW) - Part-B" & "Transmission system for Integration of Power from RE Projects in Lakadia REZ in Gujarat-Phase II (7500MW)" **-Copy of RFP documents.**

महोदय,

Kind reference is invited to the Gazette Notification No.CG-DL-E-19022026-270309 dated 12.02.2026, issued by Ministry of Power, Government of India wherein REC Power Development and Consultancy Limited has been appointed as Bid Process Coordinator (BPC) for selection of bidder as Transmission Service Provider to establish Inter-State transmission projects on Build, Own, Operate & Transfer (BOOT) basis.

In this regard, we would like to intimate that the RFP process for the subject cited projects have been initiated by way of Global Invitation in National/International newspapers i.e. Hindustan Times Package on 04.05.2026 & Financial Times Package on 07.05.2026. The important timelines in this regard are as below. :-

Sr. No.	Name of the Project	Last date of RFP Purchase	Last date for submission of response to RFP
1.	Common Transmission System for evacuation of power from Lakadia (Phase-II: 7.5GW), Jam Khambhaliya (Phase-II: 5.5GW) and Jamnagar (Phase-I: 1GW) - Part-B	03.07.2026	06.07.2026 up to 1500 Hrs (IST)
2.	Transmission system for Integration of Power from RE Projects in Lakadia REZ in Gujarat-Phase II (7500MW)	03.07.2026	06.07.2026 up to 1600 Hrs (IST)

The RfP notification and RfP document for the above projects have also been uploaded on our websites www.recindia.nic.in and www.recpdcl.in.

In line with provision of clause 9 of Tariff Based Competitive Bidding Guidelines for Transmission service', the RFP notifications are also required to be published on MoP website. Accordingly, we are attaching herewith Global Invitation (in English & Hindi) with a request to arrange to uploading of the same on the Ministry's website.

In this regard, copy of Request for Proposal (RfP), Transmission Service Agreement (TSA) and Share Purchase Agreement (SPA) along with copies of newspaper notification of the subject projects are enclosed herewith for your kind information and reference please.

धन्यवाद,

भवदीय,

(विजय कुलकर्णी)

वरिष्ठ महाप्रबंधक एवं विभागाध्यक्ष (टी & डी)

संलग्न: जैसा कि ऊपर बताया गया है

ANNEXURE P-10

JAM KHAMBHALIYA JAMNAGAR POWER TRANSMISSION LIMITED
(A wholly owned subsidiary of REC Power Development and Consultancy Limited)
Registered Office: Core-4, SCOPE Complex, 7, Lodhi Road, New Delhi-110003
Corporate Office: D-Block, REC World Headquarter,
Plot No. I-4, Sector-29, Gurugram, Haryana-122001
(U42202DL2026GOI466346)

Ref No.: Jam Khambhaliya Jamnagar-PTL/ISTS/Section-68/Approval/26-27/(31) Date: 24.06.2026

To
The Secretary,
Central Electricity Authority,
Sewa Bhawan, R. K. Puram,
New Delhi - 110 066.

Kind Attention: Sh. Rakesh Kumar

Sub: Approval under Section-68 of the Electricity Act, 2003 for laying of overhead transmission lines for the Inter-State Transmission project namely "**Common Transmission System for evacuation of power from Lakadia (Phase-II: 7.5GW), Jam Khambhaliya (Phase-II: 5.5GW) and Jamnagar (Phase-I: 1GW) - Part-B**".

Dear Sir,

Ministry of Power, Government of India vide its notification no. CG-DL-E-19022026-270309 dated 12.02.2026 (**Copy enclosed**), has appointed RECPDCL, the holding company of **JAM KHAMBHALIYA JAMNAGAR POWER TRANSMISSION LIMITED**, as the Bid Process Coordinator for establishment of the transmission project namely "**Common Transmission System for evacuation of power from Lakadia (Phase-II: 7.5GW), Jam Khambhaliya (Phase-II: 5.5GW) and Jamnagar (Phase-I: 1GW) - Part-B**" through Tariff Based Competitive Bidding process.

The scope of the project, inter-alia, comprises the following transmission elements:

Sl. No.	Scope of the Transmission Scheme
1.	Establishment of 765/400 kV, 3x1500 MVA & 400/220 kV, 3x500 MVA Nasik S/s (towards South of Nasik) with 2x330 MVAr 765 kV bus reactor and 2x125 MVAr 400 kV bus reactor. • 765/400 kV, 1500 MVA ICT – 3 Nos. (10x500 MVA single phase units including one spare ICT Unit) • 400/220 kV ICTs - 3 Nos. • 765 kV ICT bays – 3 Nos. • 400 kV ICT bays –6 Nos. • 220 kV ICT bays – 3 Nos. • 765 kV Line bays – 2 Nos. • 1x330 MVAr, 765 kV bus reactor- 2 Nos. (7x110 MVAr single phase Reactors including one spare Unit for bus /line reactor) • 765 kV Bus reactor bay – 2 Nos. • 220 kV BC– 1 No. • 220 kV TBC – 1 No. • 125 MVAr, 420 kV Bus Reactor- 2 Nos. • 400 kV Bus Reactor bay- 2 Nos. • 400 kV line bays - 2 Nos.

	• 220 kV line bays - 6 Nos. (for MSETCL 220 kV lines: Adwadi 220 kV D/C, Nasik GCR 220 kV D/C & Nasik OCR 220 kV D/C) **Future provision (space for):** • 765/400 kV, 1500 MVA ICT along with bays- 3 Nos. (on Sec-II) • 765 kV line bays along with switchable line reactors – 10 Nos. (4 Nos. on Sec-I & 6 Nos. on Sec-II) • 765 kV, 330 MVAr Bus Reactor along with bay: 2 Nos. (on Sec-II) • 765 kV Sectionaliser bay: 1 -set • 400 kV Sectionaliser bay: 1- set • 400/220 kV, 500 MVA ICT along with bays - 7 Nos. (2 on Sec-I & 5 on Sec-II) • 400 kV line bays along with Switchable Line Reactors– 10 Nos. (4 on Sec-I & 6 on Sec-II) • 420 kV, 125 MVAr Bus Reactor along with bays: 2 Nos. (on Sec-II) • 220 kV Sectionaliser bay: 1- set • 220 kV BC & TBC – 1 No. each • 220 kV line bays: 2 No. on Sec-I & 8 Nos. on Section-II
2.	South Olpad (GIS) – Nasik 765 kV D/C line
3.	2 Nos. 765 kV line bays at South Olpad (GIS) S/s (Sec-II) for South Olpad – Nasik 765 kV D/C line • 765 kV line bays – 2 Nos. (GIS) (Sec-II) along with 1 set of 765 kV sectionaliser bay so as to establish 765 kV Sec-II.
4.	765 kV, 240 MVAr Switchable line reactors on each circuit at both ends of South Olpad – Nasik 765kV D/C line • 240 MVAr, 765 kV Switchable Line Reactor- 4 Nos. (2 for South Olpad end and 2 for Nasik end) • 765 kV Switchable Line Reactor bay - 4 Nos. (2 for South Olpad end and 2 for Nasik end) • 80 MVAr spare single-phase reactor at Nasik for above 240 MVAr switchable LR. • 80 MVAr spare single-phase reactor at South Olpad S/s is already available and same shall be used for subject Switchable LR.
5.	Nasik – Pimpalgaon (MSETCL) 400 kV D/C line (Quad ACSR/AAAC/AL59 moose equivalent) *(Line to be routed from near Sinner TPP / Raymond i.e. from eastern side of Nasik)*
6.	2 Nos. 400 kV line bays at Pimpalgaon S/s for Nasik – Pimpalgaon (MSETCL) 400 kV D/C line (Quad ACSR/AAAC/AL59 moose equivalent)
	• 400 kV line bays – 2 Nos.

Accordingly, RECPDCL initiated the single stage Request for Proposal (RFP) documents on 04.05.2026 for selection of Transmission Service Provider for implementation of the above project. Further, in accordance with the provisions of the TBCB guidelines, the project-specific SPV namely "**JAM KHAMBHALIYA JAMNAGAR POWER TRANSMISSION LIMITED**" has been incorporated under the Companies Act, 2013 (**Copy of Certificate of Incorporation enclosed**). The said SPV shall be transferred to the successful bidder in accordance with the provisions of the RFP documents.

As per Clause 1.6.2.1 of Section-1 of RFP document, the responsibilities of Bid Process Coordinator, inter-alia, include obtaining approval for laying of overhead transmission lines under section-68 of Electricity Act, 2003 from the appropriate Government.

Out of the above scope, approval under Section-68 is being sought for the following overhead transmission line(s):

1. South Olpad (GIS) – Nasik 765 kV D/C line
2. Nasik – Pimpalgaon (MSETCL) 400 kV D/C line.

In view of the above, approval under Section-68 of Electricity Act, 2003, for laying of overhead transmission lines forming part of the above transmission project may kindly be accorded in favour of **JAM KHAMBHALIYA JAMNAGAR POWER TRANSMISSION LIMITED**.

The Certified True Copy (CTC) of the Minutes of the Meeting of the Board of Directors of **JAM KHAMBHALIYA JAMNAGAR POWER TRANSMISSION LIMITED** authorizing the directors to file any application is also enclosed herewith

Thanking you,

Yours sincerely

(Arun Kumar Chaturvedi)
Director

Encl.: As above

Survey Report & RA Drawings

For

Common Transmission System for evacuation of power from Lakadia (Phase-II: 7.5 GW), Jam Khambhaliya (Phase-II: 5.5 GW) and Jamnagar (Phase-I: 1GW) - Part-B

REC Power Development and Consultancy Limited
(*a wholly owned subsidiary of REC Limited*)
Corporate Office: D- Block, REC Corporate Headquarter,
Plot No. I-4, Sector-29, Gurugram-122001
Registered Office: Core 4, Scope Complex, 7,
Lodhi Road, New Delhi – 110003
Website : www.recpdcl.in

DISCLAIMER

Bidders may please note that the Bid Process Coordinator (BPC) has carried out a survey of the Transmission System associated with the Project. While every possible care has been taken in identifying the involvement of forest area/ animal and bird sanctuary/ mines in the proposed routes. However, Bidders in their own interest should carry out required surveys and field investigation for submission of their Bid. For the purpose of carrying out required survey, the address and co-ordinate of each location of sub-station has been provided by the BPC. The coordinate of location of the sub-station is only for the purpose of facilitating Bidders to locate the sub-station and the same should not be considered as the point of termination of transmission line. For exact point of termination of transmission line, the Bidder shall have to coordinate with the agency responsible for construction of sub-station/ switchyard who shall provide the inter- connection facility. Bidders in their own interest should visit the project site to confirm the location of sub-stations and any apprehension in this regard should be brought to the notice of the BPC.

Failure to verify the location of sub-station, investigate the route of the Transmission Lines associated with the Project and to examine, inspect site or subsurface conditions fully shall not be grounds for a Bidder to alter its Bid after the Bid Deadline nor shall it relieve a Bidder from any responsibility for appropriately eliminating the difficulty or costs of successfully completing the Project.

The BPC, its authorized representative, any of the Long Term Transmission Customer(s), nor their directors, employees or advisors/consultants make any representation or warranty, express or implied, or accept any responsibility or liability, whatsoever, in respect of any statements or omissions made in the Survey Report, or the accuracy, completeness or reliability of information contained therein, and shall incur no liability under any law, statue, rules or regulations as to the accuracy, reliability or completeness of such survey report, even if any loss or damage is caused to the Bidders by any act or omission on their part.

Table of Contents

Sr. No.	Description	Page No.
	Disclaimer	1-1
	SECTION: 1	
1.	Scope of Work	4-5
2.	Approach & Methodology	6-7
3.	Geographic Information	8-9
	SECTION:2	
2	**Establishment of 765/400 kV, 3x1500 MVA & 400/220 kV, 3x500 MVA Nasik S/s (towards South of Nasik) with 2x330 MVAr 765 kV bus reactor and 2x125 MVAr 400 kV bus reactor.**	11-13
2.1	Coordinates of the proposed Nasik S/s (towards South of Nasik).	14-15
2.2	Information of the proposed Nasik S/s Substation	16-18
2.3	Proposed Nasik S/s Substation location map on digital SOI sheets	19-19
	SECTION:3	
3	**South Olpad (GIS) – Nasik 765 kV D/C line**	21-22
3.1	Coordinates of both end	23-24
3.2	Index Map of Survey of India (SOI) Toposheets	25-26
3.3	Angle Schedule of the Proposed Transmission Route	27-69
3.4	Summary of Proposed Transmission Route	70-77
3.5	Wind Zone Map	78-79
3.6	Result & Conclusions	80-81
3.7	Route Alignment Map on Digitized Toposheet	82-82
	SECTION:4	
4	**Nasik – Pimpalgaon (MSETCL) 400 kV D/C line (Quad ACSR/AAAC/AL59 moose equivalent)**	84-85
4.1	Coordinates of both end	86-87
4.2	Index Map of Survey of India (SOI) Toposheets	88-89
4.3	Angle Schedule of the Proposed Transmission Route	90-96
4.4	Summary of Proposed Transmission Route	97-101
4.5	Wind Zone Map	102-103
4.6	Result & Conclusions	104-105
4.7	Route Alignment Map on Digitized Toposheet	106-106

Section: 1

Scope of Work

Name of the Scheme: Common Transmission System for evacuation of power from Lakadia (Phase-II: 7.5 GW), Jam Khambhaliya (Phase-II: 5.5 GW) and Jamnagar (Phase-I: 1GW) - Part-B

Sl. No.	Name of the Element	Type of Substation /Conductor capacity /km/ no. of bays etc.
1.	Establishment of 765/400 kV, 3x1500 MVA & 400/220 kV, 3x500 MVA Nasik S/s (towards South of Nasik) with 2x330 MVAr 765 kV bus reactor and 2x125 MVAr 400 kV bus reactor. **Future Space Provisions:** • 765/400 kV, 1500 MVA ICT along with bays- 3 Nos. (on Sec-II) • 765 kV line bays along with switchable line reactors – 10 Nos. (4 Nos. on Sec-I & 6 Nos. on Sec-II) • 765 kV, 330 MVAr Bus Reactor along with bay: 2 Nos. (on Sec-II) • 765 kV Sectionaliser bay: 1 -set • 400 kV Sectionaliser bay: 1- set • 400/220 kV, 500 MVA ICT along with bays - 7 Nos. (2 on Sec-I & 5 on Sec-II) • 400 kV line bays along with Switchable Line Reactors– 10 Nos. (4 on Sec-I & 6 on Sec-II) • 420 kV, 125 MVAr Bus Reactor along with bays: 2 Nos. (on Sec-II) • 220 kV Sectionaliser bay: 1- set • 220 kV BC & TBC – 1 No. each • 220 kV line bays: 2 No. on Sec-I & 8 Nos. on Section-II	• 765/400 kV, 1500 MVA ICT – 3 Nos. (10x500 MVA single phase units including one spare ICT Unit) • 400/220 kV ICTs - 3 Nos. • 765 kV ICT bays – 3 Nos. • 400 kV ICT bays –6 Nos. • 220 kV ICT bays – 3 Nos. • 765 kV Line bays – 2 Nos. • 1x330 MVAr, 765 kV bus reactor- 2 Nos. (7x110 MVAr single phase Reactors including one spare Unit for bus /line reactor) • 765 kV Bus reactor bay – 2 Nos. • 220 kV BC– 1 No. • 220 kV TBC – 1 No. • 125 MVAr, 420 kV Bus Reactor- 2 Nos. • 400 kV Bus Reactor bay- 2 Nos. • 400 kV line bays - 2 Nos. • 220 kV line bays - 6 Nos. (for MSETCL 220 kV lines: Adwadi 220 kV D/C, Nasik GCR 220 kV D/C & Nasik OCR 220 kV D/C)
2.	South Olpad (GIS) – Nasik 765 kV D/C line	-
3.	2 Nos. 765 kV line bays at South Olpad (GIS) S/s (Sec-II) for South Olpad – Nasik 765 kV D/C line.	• 765 kV line bays – 2 Nos. (GIS) (Sec-II) along with 1 set of 765 kV Sectionaliser bay so as to establish 765 kV Sec-II.

Sl. No.	Name of the Element	Type of Substation /Conductor capacity /km/ no. of bays etc.
4	765 kV, 240 MVAr Switchable line reactors on each circuit at both ends of South Olpad – Nasik 765kV D/C line.	• 240 MVAr, 765 kV Switchable Line Reactor- 4 Nos. (2 for South Olpad end and 2 for Nasik end) • 765 kV Switchable Line Reactor bay - 4 Nos. (2 for South Olpad end and 2 for Nasik end) • 80 MVAr spare single-phase reactor at Nasik for above 240 MVAr switchable LR. • 80 MVAr spare single-phase reactor at South Olpad S/s is already available and same shall be used for subject Switchable LR.
5	Nasik – Pimpalgaon (MSETCL) 400 kV D/C line (Quad ACSR/AAAC/AL59 moose equivalent) (Line to be routed from near Sinner TPP / Raymond i.e. from eastern side of Nasik)	-
6	2 Nos. 400 kV line bays at Pimpalgaon S/s for Nasik – Pimpalgaon (MSETCL) 400 kV D/C line (Quad ACSR/AAAC/AL59 moose equivalent)	400 kV line bays – 2 Nos.

2: Approach & Methodology

Approach: Identify the optimal transmission line corridor between the origin and termination points, taking into account the following key constraints:

- Forests and wild life habitats
- Densely populated areas
- Major crossing such as rivers, railways, highways and other crossings

Methodology: Data Collection & Digitization of Maps: Survey of India TOPO sheets on 1:50,000 scale. All the Survey of India TOPO sheets were geo-referenced with respect to Latitude Longitude of TOPO sheets under following projection system to keep uniformity with respect to GPS co-ordinates:

- Projection : UTM
- Spheroid : WGS84
- Datum : WGS84
- Zone : 43
- North or South : North

These were used to update the base map features extracted from TOPO sheets are as follows. The features extracted from SOI TOPO sheets.

- City and village sprawl
- Contours
- Spot Heights and Bench Marks
- Railway lines (MG/BG)
- Metalled Roads (National/State Highways),
- Major Rivers (width > 500 m)
- Canals
- Nallah/Drain crossings
- Forest (Reserved/Protected/Social/Open Scrub)
- Protected areas (Cantonments, Air fields)
- Main power lines (EHV) and other electrical power lines
- Telephone lines
- Angle points
- Lakes, Reservoirs and Ponds
- Swamp
- Air Port/ Air Strip

3: Geographical Information

3.1. Geographical Information Nashik District:

Nashik is located in the northwestern part of Maharashtra and lies on the Deccan Plateau. The district has a tropical wet and dry climate with moderate to high rainfall, especially during the monsoon season. The terrain is a mix of plains, hills, and plateaus, with parts of the Western Ghats influencing its topography. The district is drained by important rivers such as the Godavari and its tributaries. Nashik has an average elevation of about 560 metres above sea level.

3.2. Climate Nashik District:

Temperature:

Nashik has a tropical wet and dry climate, with summer temperatures typically ranging from 30°C to 40°C, while winter temperatures range between 10°C and 20°C. Compared to desert regions, temperatures are more moderate, and nights are relatively cooler, especially in winter.

Rainfall:

Nashik receives moderate to high annual rainfall, averaging around 700–1000 mm, with the majority occurring during the monsoon months (June–September).

Humidity:

Humidity levels in Nashik are moderate, generally ranging from 40–70%, and tend to increase during the monsoon season.

Winds:

Nashik experiences light to moderate winds throughout the year. During the monsoon season, winds may become stronger and are often associated with rainfall, while summer winds are generally dry but not as intense as desert regions.

Monsoon:

The monsoon in Nashik is well-defined and occurs from June to September, bringing consistent and sometimes heavy rainfall influenced by the Western Ghats.

Temperature during winter:

During winter, temperatures in Nashik generally range between 10°C and 20°C, with cool nights and pleasant daytime conditions.

3.3 Soil type Nashik District

Nashik District is characterized by predominantly black cotton soil (regur), along with patches of red and lateritic soils in hilly areas. The black soil is rich in clay content, has good moisture retention capacity, and is highly suitable for crops like cotton, sugarcane, grapes, and cereals. The soil is generally fertile but may become hard when dry and sticky when wet. In the upland and hilly regions, soils are comparatively less fertile but support horticulture and forest vegetation.

Section: 2

2.0: Establishment of 765/400 kV, 3x1500 MVA & 400/220 kV, 3x500 MVA Nasik S/s.

Snapshot of KMZ file for proposed 765/400 kV Nasik Substation

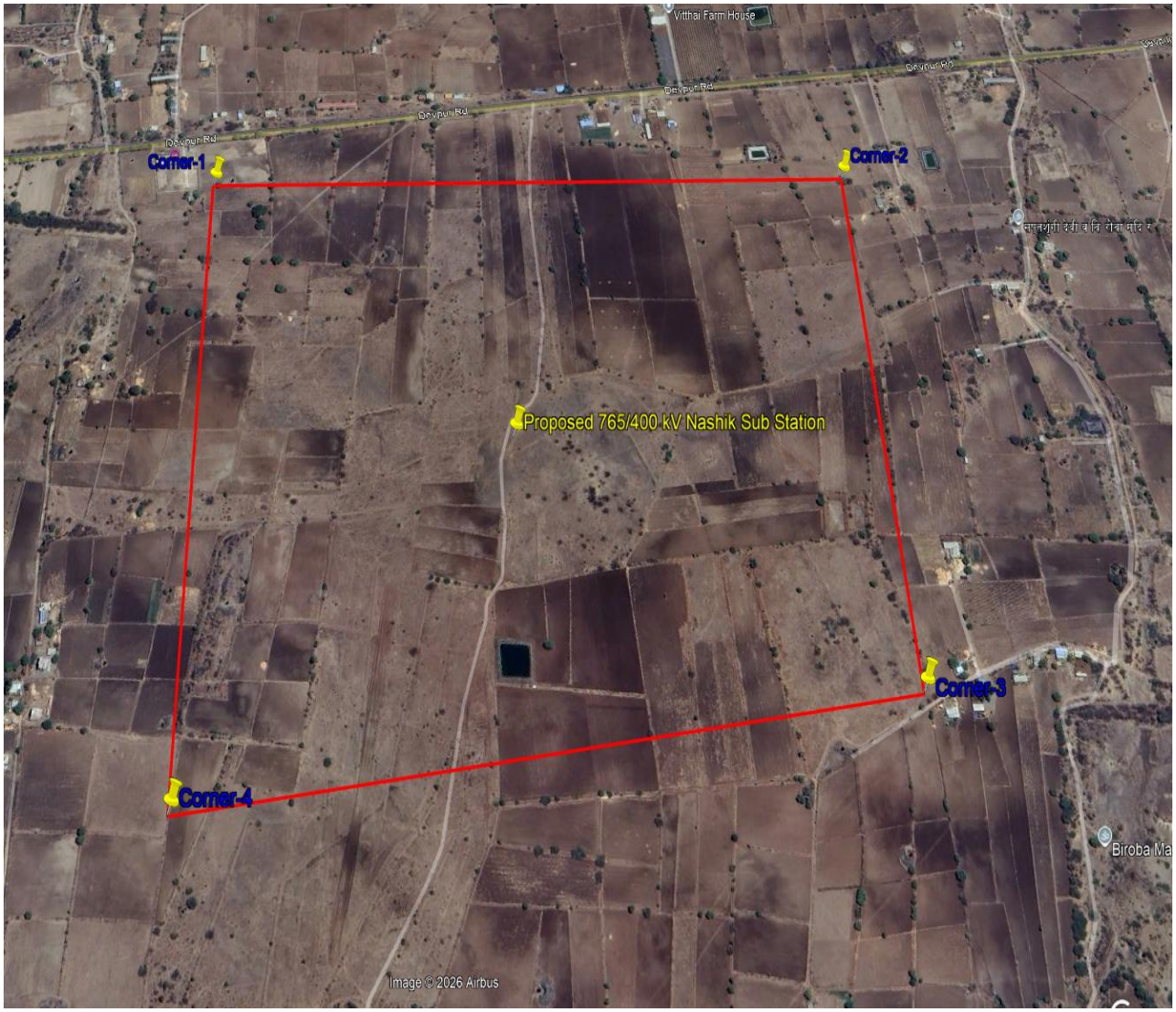

Photographs of proposed 765/400 kV Nasik Substation

2:1 Coordinates of the proposed 765/400kV Nasik substation

Coordinates of the proposed 765/400kV Nasik substation			
Village: Panchale Taluka: Sinner District: Nashik State: Maharashtra	**Corner**	**Latitude**	**Longitude**
	Corner-1	19°52'28.55"N	74°11'19.59"E
	Corner-2	19°52'23.76"N	74°11'51.47"E
	Corner-3	19°52'1.93"N	74°11'47.19"E
	Corner-4	19°52'2.82"N	74°11'15.64"E

Note: The substation (greenfield load serving sub-station) shall not be beyond 5 km radius of the proposed location.

2.3: Details of the proposed 765/400 kV Nasik Substation

Sl. No.	Criterion	Proposed Nasik
1	Land Co-ordinates	
a)	Corner 1	19°52'28.55"N 74°11'19.59"E
b)	Corner 2	19°52'23.76"N 74°11'51.47"E
c)	Corner 3	19°52'1.93"N 74°11'47.19"E
d)	Corner 4	19°52'2.82"N 74°11'15.64"E
2	Size (Acre) (mtr x mtr)	Approx. 170 Acre **Corner** / **Size (m)** 1-2 / Approx.940 2-3 / Approx. 670 3-4 / Approx. 921 4-1 / Approx. 814
3	Govt. /Private/Forest land	Private
4	Forest/WLS/Eco Sensitive Zone/Elephant Corridor	Nil
5	Tribes/Non-Tribes Land	Nil
6	Agriculture/Waste land	Agricultural
7	Development	Nil
8	Approximate cost	
	a. Circle rate per acre	Approx. Rs. 30 Lakhs
	b. Market rate per acre	Approx. Rs. 50-60 Lakh#
	c. Approx. cost of the land	Approx. 51 Crore
9	Terrain	Mostly Plain
10	Type of Soil	Black Cotton Soil#
11	No. of Owners	Approx. 50 Nos.#
12	Environment/Pollution in the vicinity	Nil
13	Location with reference to nearest town	Sinner
14	High Flood Level (HFL) Data	Not Available
15	Diversion of Nallah/Canal required	No major requirement
16	Slope	Yes
17	Approximate Extent of leveling required (in meter)	No major requirement
18	Land acquisition feasibility	Yes
19	Rate of Govt. Land	Not Applicable
20	Extent of approach	Available
21	Planned/unplanned development	Unplanned Development
22	No. of families to be displaced	No major requirement
23	Level of site with reference to road level	
	a. Level of road	586 Meters
	b. Level of site	586 Meters

Sl. No.	Criterion	Proposed Nasik
24	Distance from sea shore	Approx. 150 Km
25	Logistics Survey	No Major Hurdle
26	Approach	Along the road
27	Obstacles in reaching site	No
28	Nearby main road	NH-160
29	Length of approach road to be constructed	Not Required
30	Name of nearest airport (name)/Airstrip	Shirdi International Airport (Approx. 31 KM)
31	Upcoming Aviation/Airport Zone/Air Force	Nil
32	Name of nearest Rail head	Nashik Railway Station
33	Availability of ground water	Available
34	Availability of transmission corridor (entry of line and exit of lines) (Three /four sides)	Four Sides
35	Existence of structures/dwelling units in the land of the proposed site	Nil
36	Availability of disposal of rain/storm water	Not Available
37	Crops grown and types (Multi- crop/single crop)	Multi Crop
38	Distance from main road	8.5 KM from NH-160
39	Nearest railway station (BG/MG)	Nashik Railway Station
40	Unloading facility at railway station	Not Available
41	No. of Culverts required for approach	Not Required
42	Nearest EHV line/Nearest sub-station	Sinnar Substation
43	Length of line between this site & nearest substation for construction power at 33/11Kv	Approx. 21 Km
44	Frontage for line take off	Available
45	Telephone/Telegraph line	Nil
46	Community Facilities	Available
47	Drainage	Not Available
48	Security	Not Available
49	Availability of construction water	Available
50	Availability of drinking water	Available in the vicinity
51	Wind Zone	2
52	Army cantonment/Mining/No Go Areas	Nil

The information is tentative only. Bidders may asses the same through their own due diligence.

2.3 Proposed Sub-Station Location Map on Digital SOI Sheets

Section: 3

3.0: South Olpad (GIS)-Nasik 765 kV D/c

Snapshot of KMZ file for the proposed South Olpad (GIS)-Nasik 765 kV D/c line

3.1 : Coordinates of both ends

Substation Details

Details of Substation	Latitude	Longitude
Proposed 765/400 kV South Olpad Substation Village: Andhi Taluka: Olpad District: Surat State: Gujarat	21°21'15.98" N	72°46'32.67" E
Proposed 765/400 kV Nashik Substation Village: Panchale Taluka: Sinner District: Nashik State: Maharashtra	19°52'4.40"N	74°11'20.94"E

Note: The exact coordinates for construction of 765 kV line bays at proposed 765/400 kV South Olpad substation for termination of the transmission line namely "South Olpad-Nasik 765 kV D/c line" are to be obtained from the developer of 765/400 kV South Olpad substation during execution stage.

3.2 : Index Map of SOI Toposheets

Survey of India Toposheets Index Map (1:50000 scale)

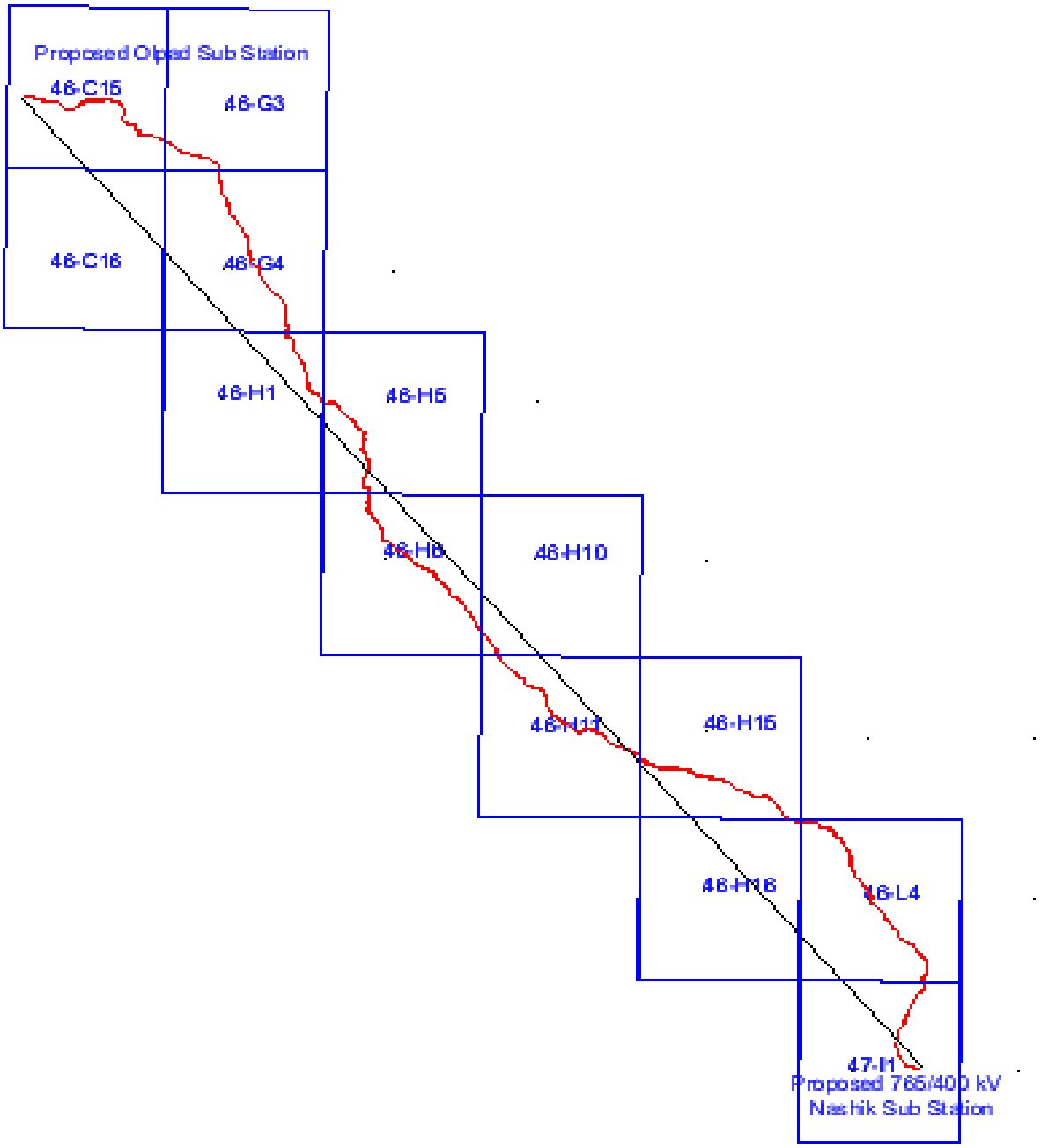

3.3: Angle Schedule of the proposed South Olpad (GIS)-Nasik 765 kV D/c line

South Olpad (GIS)-Nasik 765 kV D/c line									
AP No.	**Easting**	**Northing**	**Latitude**	**Longitude**	**Span (Mtr.)**	**Cumulative Length (Mtr.)**	**Angle of Deviation**	**Remarks**	**Altitude (M)**
Gantry	269343	2363006	21°21'15.98" N	72°46'32.67" E				Proposed South Olpad Substation	29
					129				
AP1	269341	2363135	21°21'20.16" N	72°46'32.56" E		129	31°53'39.7"R		29
					364				
AP2	269530	2363445	21°21'30.35" N	72°46'38.97" E		492	51°9'2.9"R		32
					733				
AP3	270257	2363542	21°21'33.8" N	72°47'4.13" E		1225	20°53'16"R		30
					250			U/c Ahmedabad – South Olpad (GIS) 765 kV D/c Line	
AP4	270500	2363484	21°21'32.04" N	72°47'12.59" E		1475	13°10'43.8"L		30
					404				
AP5	270904	2363483	21°21'32.18" N	72°47'26.59" E		1879	27°55'52.5"R		29
					249			U/c Vadodara (GIS) - South Olpad (GIS) 765 kV D/C Line	
AP6	271123	2363365	21°21'28.48" N	72°47'34.26" E		2127	19°32'3.9"L		30
					279				
AP7	271398	2363324	21°21'27.25" N	72°47'43.84" E		2406	10°34'45.3"R		31
					249			GSPL Gas Pipe Line & U/C South Olpad (GIS) – Boisar-II (GIS) 765kV D/c Line	
AP8	271634	2363242	21°21'24.7" N	72°47'52.05" E		2655	3°59'22.4"R		29

South Olpad (GIS)-Nasik 765 kV D/c line									
AP No.	Easting	Northing	Latitude	Longitude	Span (Mtr.)	Cumulative Length (Mtr.)	Angle of Deviation	Remarks	Altitude (M)
					250			GGL Pipe Line	
AP9	271864	2363144	21°21'21.61" N	72°48'0.07" E		2905	2°41'23.3"L		30
					648				
AP10	272471	2362917	21°21'14.53" N	72°48'21.24" E		3553	14°6'33"R		31
					251			Gail Gas Pipe Line & Proposed South Olpad 500 kV HVDC -KPS 3	
AP11	272677	2362775	21°21'9.99" N	72°48'28.48" E		3804	2°2'55.8"R		31
					242			220 kV D/c line (KWS-HAL) PGCIL	
AP12	272871	2362631	21°21'5.4" N	72°48'35.28" E		4046	43°0'0.7"L		33
					1364				
AP13	274226	2362783	21°21'10.94" N	72°49'22.23" E		5409	22°52'4.3"R		33
					803				
AP14	274996	2362555	21°21'3.89" N	72°49'49.04" E		6212	29°37'57.4"R		33
					224			220 kV D/c line (JEAS-KOSAMBA)	
AP15	275152	2362393	21°20'58.7" N	72°49'54.52" E		6436	4°20'26.7"L		33
					1248				
AP16	276083	2361562	21°20'32.1" N	72°50'27.2" E		7684	35°7'52"L		36
					1248				
AP17	277323	2361418	21°20'27.96" N	72°51'10.3" E		8933	7°58'48"R		36
					222			GAIL Gas Pipe Line	
AP18	277538	2361362	21°20'26.23" N	72°51'17.78" E		9155	56°46'38.9"L		37
					1723				

South Olpad (GIS)-Nasik 765 kV D/c line									
AP No.	Easting	Northing	Latitude	Longitude	Span (Mtr.)	Cumulative Length (Mtr.)	Angle of Deviation	Remarks	Altitude (M)
AP19	278815	2362518	21°21'4.39" N	72°52'1.56" E		10878	27°40'60"R		36
					1697				
AP20	280458	2362942	21°21'18.9" N	72°52'58.37" E		12575	13°57'16.5"R		38
					1575				
AP21	282033	2362957	21°21'20.05" N	72°53'53.02" E		14150	1°32'22.2"R		43
					250			PIL Pipe Line	
AP22	282283	2362952	21°21'20.02" N	72°54'1.69" E		14400	44°29'43.1"L		42
					248			GSPL Gas Pipe Line	
AP23	282463	2363123	21°21'25.63" N	72°54'7.85" E		14648	46°8'29.3"R		43
					434				
AP24	282896	2363103	21°21'25.16" N	72°54'22.9" E		15082	20°16'20.8"R		43
					246			Railway Double Track Electrified-Pol-No.284/27,284/28A	
AP25	283123	2363006	21°21'22.14" N	72°54'30.82" E		15328	0°35'57.2"L		45
					771				
AP26	283836	2362713	21°21'12.92" N	72°54'55.69" E		16099	31°57'51.1"L		41
					246			Bullet Train (Ahmedabad to Mumbai)	
AP27	284079	2362755	21°21'14.36" N	72°55'4.08" E		16345	26°51'12.4"R		43
					512				
AP28	284567	2362603	21°21'9.65" N	72°55'21.11" E		16856	6°50'56.4"R		40
					235			66 kV S/c GETCO	

South Olpad (GIS)-Nasik 765 kV D/c line									
AP No.	Easting	Northing	Latitude	Longitude	Span (Mtr.)	Cumulative Length (Mtr.)	Angle of Deviation	Remarks	Altitude (M)
AP29	284782	2362507	21°21'6.62" N	72°55'28.6" E		17091	27°59'14.5"R		46
					1339				
AP30	285605	2361451	21°20'32.64" N	72°55'57.65" E		18431	37°57'48.1"R		49
					246			Torrent -GSPL Gas Pipe Line	
AP31	285605	2361205	21°20'24.65" N	72°55'57.76" E		18677	18°54'4.2"L		48
					655				
AP32	285817	2360585	21°20'4.6" N	72°56'5.39" E		19331	40°5'26.1"R		51
					970				
AP33	285466	2359681	21°19'35.04" N	72°55'53.62" E		20302	45°50'6.2"L		48
					402				
AP34	285633	2359315	21°19'23.23" N	72°55'59.59" E		20704	51°13'56.7"L		44
					368				
AP35	285990	2359225	21°19'20.46" N	72°56'12.01" E		21072	34°55'37.7"R		44
					237			SH-605 (Velanja-Pardi)	
AP36	286145	2359046	21°19'14.7" N	72°56'17.48" E		21309	40°37'59.6"L		40
					248				
AP37	286391	2359010	21°19'13.62" N	72°56'26.02" E		21557	35°45'3.8"R		41
					229			220 kV D/c line T.N 123-T.N 124	
AP38	286555	2358850	21°19'8.51" N	72°56'31.78" E		21786	37°31'6.8"L		39
					227				
AP39	286780	2358824	21°19'7.75" N	72°56'39.61" E		22013	39°25'21.6"R		39
					234			220 kV D/c line	

South Olpad (GIS)-Nasik 765 kV D/c line									
AP No.	Easting	Northing	Latitude	Longitude	Span (Mtr.)	Cumulative Length (Mtr.)	Angle of Deviation	Remarks	Altitude (M)
AP40	286943	2358655	21°19'2.34" N	72°56'45.32" E		22247	54°49'41.1"L		38
					259				
AP41	287198	2358695	21°19'3.72" N	72°56'54.17" E		22506	43°47'22.4"R		37
					216			220 kV D/c line	
AP42	287375	2358570	21°18'59.76" N	72°57'0.36" E		22722	42°4'22.6"R		38
					203			66 kV M/c line	
AP43	287420	2358373	21°18'53.35" N	72°57'2.02" E		22925	39°1'37.3"L		42
					330				
AP44	287680	2358169	21°18'46.84" N	72°57'11.12" E		23255	6°52'0.3"R		43
					214			220 kV D/c line	
AP45	287832	2358017	21°18'41.98" N	72°57'16.45" E		23469	10°45'35.4"L		43
					152				
AP46	287958	2357932	21°18'39.24" N	72°57'20.86" E		23621	7°10'4.9"R		40
					253			NH-48 (Ahmedabad-Mumbai Highway) & 220 kV D/c line	
AP47	288148	2357765	21°18'33.89" N	72°57'27.52" E		23874	51°39'3.1"R		39
					274				
AP48	288133	2357491	21°18'24.99" N	72°57'27.14" E		24148	15°50'50"L		43
					288				
AP49	288197	2357210	21°18'15.88" N	72°57'29.48" E		24437	52°49'14.3"L		43
					207			66 kV D/c line	
AP50	288386	2357124	21°18'13.18" N	72°57'36.07" E		24644	14°39'3.6"R		43
					218				
AP51	288555	2356987	21°18'8.78" N	72°57'42.01" E		24862	38°11'16"L		43

South Olpad (GIS)-Nasik 765 kV D/c line									
AP No.	Easting	Northing	Latitude	Longitude	Span (Mtr.)	Cumulative Length (Mtr.)	Angle of Deviation	Remarks	Altitude (M)
					727			Tapi River	
AP52	289283	2356976	21°18'8.75" N	72°58'7.25" E		25590	14°58'17.5"R		40
					1819				
AP53	291034	2356481	21°17'53.38" N	72°59'8.2" E		27409	12°45'19.4"R		40
					1748				
AP54	292569	2355645	21°17'26.84" N	73°0'1.84" E		29158	25°27'18.5"L		46
					214			400 kV D/c line Torrent Energy (Dgen-Navsari) -T.N 248-T.N249	
AP55	292783	2355634	21°17'26.56" N	73°0'9.25" E		29371	27°18'56.3"R		48
					852				
AP56	293518	2355203	21°17'12.84" N	73°0'34.92" E		30223	14°48'4.7"R		46
					1304				
AP57	294436	2354277	21°16'43.14" N	73°1'7.18" E		31527	24°25'46.8"L		47
					941				
AP58	295315	2353944	21°16'32.65" N	73°1'37.82" E		32467	20°28'37.9"L		49
					219			U/c 765 kV D/c line (Ahmedabad -Navsari)	
AP59	295534	2353942	21°16'32.7" N	73°1'45.41" E		32686	15°10'12.2"L		49
					242			Vataman Switching Station – Navsari (New) (Gis) 765 kV D/C Line U/B & New Line U/C	
AP60	295768	2354004	21°16'34.81" N	73°1'53.5" E		32928	6°8'0.9"R		47
					293				

South Olpad (GIS)-Nasik 765 kV D/c line									
AP No.	**Easting**	**Northing**	**Latitude**	**Longitude**	**Span (Mtr.)**	**Cumulative Length (Mtr.)**	**Angle of Deviation**	**Remarks**	**Altitude (M)**
AP61	296058	2354049	21°16'36.37" N	73°2'3.53" E		33221	31°45'56.6"R		47
					242			220 kV D/c line (Sugen-Puna)	
AP62	296280	2353954	21°16'33.38" N	73°2'11.29" E		33464	7°14'27.3"L		51
					102				
AP63	296379	2353926	21°16'32.52" N	73°2'14.71" E		33566	33°2'14.5"R		51
					239			400 kV D/c line (Kosamba – VAV)	
AP64	296536	2353746	21°16'26.72" N	73°2'20.26" E		33805	29°6'19.8"L		49
					642				
AP65	297141	2353529	21°16'19.92" N	73°2'41.32" E		34447	22°12'10.1"L		51
					219			220 kV D/c line (Sugen-Bhatar) & NH-NE4 Vadodara-Mumbai Expy	
AP66	297360	2353539	21°16'20.32" N	73°2'48.91" E		34667	23°12'59.4"R		48
					1040				
AP67	298332	2353171	21°16'8.74" N	73°3'22.79" E		35706	21°51'0"L		52
					970				
AP68	299302	2353189	21°16'9.73" N	73°3'56.41" E		36676	38°21'20.2"R		50
					1300				
AP69	300337	2352403	21°15'44.57" N	73°4'32.63" E		37976	34°14'59.7"L		51
					248			400 kV S/c line (Vapi - Gandhar Kawas)	
AP70	300585	2352390	21°15'44.24" N	73°4'41.23" E		38224	48°48'9.5"R		51

South Olpad (GIS)-Nasik 765 kV D/c line									
AP No.	Easting	Northing	Latitude	Longitude	Span (Mtr.)	Cumulative Length (Mtr.)	Angle of Deviation	Remarks	Altitude (M)
					521				
AP71	300907	2351980	21°15'31.07" N	73°4'52.57" E		38745	36°18'0.4"R		54
					824				
AP72	300934	2351157	21°15'4.3" N	73°4'53.87" E		39569	12°2'23.2"L		51
					240			SH-167	
AP73	300992	2350923	21°14'56.73" N	73°4'55.97" E		39810	9°34'43.1"R		53
					572				
AP74	301035	2350353	21°14'38.22" N	73°4'57.72" E		40381	29°4'52.5"L		53
					237			400 kV D/c line (Power Grid GND-NAV-T.N 250-T.N 251)	
AP75	301166	2350156	21°14'31.85" N	73°5'2.33" E		40618	29°6'51.6"R		53
					1483				
AP76	301278	2348676	21°13'43.8" N	73°5'6.83" E		42102	24°54'38.5"L		51
					200			66 kV D/c line	
AP77	301375	2348502	21°13'38.16" N	73°5'10.29" E		42302	37°5'46.1"R		52
					136				
AP78	301357	2348367	21°13'33.78" N	73°5'9.7" E		42438	3°23'52.8"L		52
					243			66 kV D/c line	
AP79	301338	2348125	21°13'25.89" N	73°5'9.15" E		42681	33°50'55.4"L		49
					481				
AP80	301574	2347705	21°13'12.35" N	73°5'17.52" E		43162	40°18'44.3"R		50
					221			220 kV D/c Power Grid (KAP-VAV)	
AP81	301532	2347488	21°13'5.27" N	73°5'16.15" E		43384	2°54'54.6"L		52

South Olpad (GIS)-Nasik 765 kV D/c line									
AP No.	Easting	Northing	Latitude	Longitude	Span (Mtr.)	Cumulative Length (Mtr.)	Angle of Deviation	Remarks	Altitude (M)
					209			220 kV D/c line	
AP82	301503	2347281	21°12'58.54" N	73°5'15.23" E		43592	24°47'59"L		52
					359				
AP83	301607	2346937	21°12'47.4" N	73°5'18.97" E		43951	27°43'14.1"L		50
					1081				
AP84	302365	2346166	21°12'22.63" N	73°5'45.57" E		45033	34°46'26.8"R		50
					1379				
AP85	302598	2344807	21°11'38.53" N	73°5'54.22" E		46412	5°12'45.4"R		53
					242			66 kV S/c line & Canal	
AP86	302617	2344565	21°11'30.69" N	73°5'54.99" E		46654	2°26'31.1"L		55
					245			66 kV D/c Line	
AP87	302647	2344322	21°11'22.8" N	73°5'56.12" E		46899	0°24'32.3"L		52
					747				
AP88	302743	2343582	21°10'58.76" N	73°5'59.75" E		47646	38°12'5.5"L		52
					617				
AP89	303183	2343150	21°10'44.9" N	73°6'15.19" E		48262	44°31'15.7"L		53
					243			SH-165	
AP90	303426	2343151	21°10'45.01" N	73°6'23.62" E		48505	49°13'0"R		54
					244				
AP91	303586	2342966	21°10'39.07" N	73°6'29.23" E		48749	18°46'20.1"R		54
					226			400 kV Power Grid KPP-NAV- T.N 0078 - T.N 0079	
AP92	303671	2342756	21°10'32.29" N	73°6'32.27" E		48976	10°38'25"L		52
					2288				

South Olpad (GIS)-Nasik 765 kV D/c line									
AP No.	Easting	Northing	Latitude	Longitude	Span (Mtr.)	Cumulative Length (Mtr.)	Angle of Deviation	Remarks	Altitude (M)
AP93	304909	2340832	21°9'30.2" N	73°7'15.96" E		51264	10°55'9.9"R		54
					1226				
AP94	305365	2339694	21°8'53.38" N	73°7'32.23" E		52490	46°32'27"L		51
					229			SH-88	
AP95	305578	2339609	21°8'50.71" N	73°7'39.65" E		52719	35°24'48.5"R		53
					512				
AP96	305856	2339180	21°8'36.85" N	73°7'49.48" E		53231	18°41'45.1"R		53
					245			Railway line Double Track -Pol No-29/22,29/23	
AP97	305917	2338942	21°8'29.15" N	73°7'51.67" E		53476	13°33'27.2"R		57
					750				
AP98	305926	2338193	21°8'4.79" N	73°7'52.29" E		54226	12°13'21"L		53
					203			GGL Home District Gas	
AP99	305971	2337995	21°7'58.38" N	73°7'53.94" E		54428	11°5'40.2"R		55
					1591				
AP100	306022	2336405	21°7'6.71" N	73°7'56.35" E		56019	46°28'48.4"L		46
					240			Mindhola River	
AP101	306201	2336246	21°7'1.6" N	73°8'2.62" E		56259	29°46'49.8"R		44
					738				
AP102	306436	2335546	21°6'38.93" N	73°8'11.03" E		56997	23°13'44.1"R		56
					213			NH-53 (Songadh-Surat)	
AP103	306418	2335334	21°6'32.03" N	73°8'10.51" E		57210	25°48'19.9"L		55
					694			66 kV H Pole	

South Olpad (GIS)-Nasik 765 kV D/c line									
AP No.	**Easting**	**Northing**	**Latitude**	**Longitude**	**Span (Mtr.)**	**Cumulative Length (Mtr.)**	**Angle of Deviation**	**Remarks**	**Altitude (M)**
AP104	306668	2334687	21°6'11.09" N	73°8'19.43" E		57904	34°13'15.2"L		55
					919				
AP105	307424	2334164	21°5'54.38" N	73°8'45.82" E		58822	2°54'31.9"R		58
					238			U/C South Olpad (GIS) – Boisar-Ii (GIS) 765 kV D/c Line	
AP106	307612	2334019	21°5'49.74" N	73°8'52.4" E		59060	36°8'14.3"R		52
					360				
AP107	307713	2333674	21°5'38.54" N	73°8'56.04" E		59420	36°20'17.2"R		56
					235			SH-187 (Kadodra-Antapur)	
AP108	307633	2333453	21°5'31.34" N	73°8'53.34" E		59655	34°30'53.7"L		57
					1139				
AP109	307917	2332350	21°4'55.6" N	73°9'3.64" E		60794	23°18'6.8"L		50
					2829				
AP110	309650	2330113	21°3'43.52" N	73°10'4.55" E		63623	10°55'39"L		60
					2318				
AP111	311391	2328583	21°2'54.42" N	73°11'5.46" E		65941	30°20'29.2"R		61
					1261			66 kV H POL	
AP112	311788	2327386	21°2'15.65" N	73°11'19.68" E		67203	33°37'2.6"L		58
					241			Under Bidding 800 kV HVDC Barmer-South Kalamb	
AP113	311978	2327238	21°2'10.9" N	73°11'26.3" E		67443	52°49'1.5"R		54
					589				

South Olpad (GIS)-Nasik 765 kV D/c line									
AP No.	Easting	Northing	Latitude	Longitude	Span (Mtr.)	Cumulative Length (Mtr.)	Angle of Deviation	Remarks	Altitude (M)
AP114	311969	2326649	21°1'51.74" N	73°11'26.23" E		68032	17°25'4.3"R		48
					392			Purna River	
AP115	311846	2326277	21°1'39.61" N	73°11'22.13" E		68424	22°17'2"L		52
					1330				
AP116	311939	2324950	21°0'56.52" N	73°11'25.87" E		69754	20°31'6.2"L		54
					1181				
AP117	312430	2323876	21°0'21.76" N	73°11'43.28" E		70935	43°45'51.6"R		64
					870				
AP118	312143	2323054	20°59'54.95" N	73°11'33.67" E		71805	22°58'19.3"L		63
					630				
AP119	312184	2322426	20°59'34.54" N	73°11'35.34" E		72435	26°38'22.5"L		62
					294				
AP120	312333	2322173	20°59'26.36" N	73°11'40.58" E		72728	47°16'22.9"L		59
					554			Canal	
AP121	312873	2322054	20°59'22.7" N	73°11'59.35" E		73282	33°23'53.5"R		63
					410				
AP122	313159	2321761	20°59'13.27" N	73°12'9.36" E		73691	32°3'25.5"R		64
					585				
AP123	313283	2321189	20°58'54.73" N	73°12'13.86" E		74276	19°4'45.8"R		64
					1040				
AP124	313158	2320157	20°58'21.13" N	73°12'9.95" E		75316	44°27'14.2"L		62
					1418				
AP125	314023	2319033	20°57'44.89" N	73°12'40.32" E		76734	12°10'8.9"R		68
					426				
AP126	314206	2318648	20°57'32.44" N	73°12'46.8" E		77161	13°34'23.2"L		70

South Olpad (GIS)-Nasik 765 kV D/c line									
AP No.	Easting	Northing	Latitude	Longitude	Span (Mtr.)	Cumulative Length (Mtr.)	Angle of Deviation	Remarks	Altitude (M)
					328				
AP127	314412	2318393	20°57'24.23" N	73°12'54.03" E		77488	16°57'47"R		65
					250			66 kV S/c Line	
AP128	314506	2318162	20°57'16.74" N	73°12'57.36" E		77738	4°55'55.3"R		64
					329				
AP129	314602	2317848	20°57'6.56" N	73°13'0.82" E		78067	40°47'4.7"L		68
					185				
AP130	314759	2317749	20°57'3.42" N	73°13'6.28" E		78251	2°58'32.8"R		67
					213			220 kV D/c line KAP-VAPI Power Grid	
AP131	314933	2317627	20°56'59.5" N	73°13'12.36" E		78465	34°26'9.1"R		68
					405				
AP132	315075	2317247	20°56'47.22" N	73°13'17.4" E		78869	22°29'56"R		70
					635				
AP133	315052	2316613	20°56'26.59" N	73°13'16.86" E		79504	34°24'1.1"L		71
					705				
AP134	315429	2316018	20°56'7.37" N	73°13'30.14" E		80209	40°59'12"R		67
					239			SH-165 (Mahuva-Anawa) & Adani Gas Pipe Line	
AP135	315393	2315781	20°55'59.66" N	73°13'28.99" E		80448	16°9'22.2"L		66
					902				
AP136	315511	2314887	20°55'30.65" N	73°13'33.42" E		81349	15°28'52.1"L		67
					407			Olan Khadi River	
AP137	315670	2314513	20°55'18.52" N	73°13'39.07" E		81757	23°44'15.9"R		71

South Olpad (GIS)-Nasik 765 kV D/c line									
AP No.	Easting	Northing	Latitude	Longitude	Span (Mtr.)	Cumulative Length (Mtr.)	Angle of Deviation	Remarks	Altitude (M)
					1209				
AP138	315655	2313304	20°54'39.2" N	73°13'39" E		82966	34°33'9.5"L		74
					423				
AP139	315890	2312952	20°54'27.86" N	73°13'47.28" E		83389	38°45'1.2"L		73
					452				
AP140	316322	2312817	20°54'23.62" N	73°14'2.26" E		83841	23°58'43.9"R		74
					420			Ambika River	
AP141	316637	2312539	20°54'14.69" N	73°14'13.27" E		84261	51°7'43.6"L		66
					320				
AP142	316953	2312593	20°54'16.56" N	73°14'24.18" E		84582	33°42'21.4"R		76
					313				
AP143	317239	2312466	20°54'12.53" N	73°14'34.12" E		84895	57°35'52.3"R		75
					410				
AP144	317299	2312060	20°53'59.35" N	73°14'36.35" E		85305	25°5'35.1"L		71
					1253				
AP145	317991	2311015	20°53'25.62" N	73°15'0.68" E		86558	46°50'5.2"L		67
					416				
AP146	318401	2310945	20°53'23.5" N	73°15'14.9" E		86974	20°8'37"L		70
					563				
AP147	318955	2311047	20°53'27.02" N	73°15'34.02" E		87537	25°4'51.3"R		72
					298				
AP148	319243	2310972	20°53'24.68" N	73°15'44.03" E		87835	50°2'31.9"L		77
					216			SH-165 Mahuva – Anawal & Adani Gas Pipe Line	

South Olpad (GIS)-Nasik 765 kV D/c line									
AP No.	Easting	Northing	Latitude	Longitude	Span (Mtr.)	Cumulative Length (Mtr.)	Angle of Deviation	Remarks	Altitude (M)
AP149	319419	2311098	20°53'28.82" N	73°15'50.08" E		88052	17°57'42.3"R		75
					210				
AP150	319620	2311161	20°53'30.95" N	73°15'56.99" E		88262	34°8'46.9"R		79
					309				
AP151	319915	2311073	20°53'28.18" N	73°16'7.25" E		88570	51°48'5.5"R		82
					538				
AP152	320113	2310572	20°53'11.98" N	73°16'14.27" E		89108	16°34'15.1"L		82
					213				
AP153	320244	2310405	20°53'6.58" N	73°16'18.88" E		89321	20°48'56"L		82
					229				
AP154	320441	2310286	20°53'2.8" N	73°16'25.72" E		89551	26°58'34.7"R		84
					508				
AP155	320710	2309855	20°52'48.86" N	73°16'35.18" E		90059	9°53'29.7"L		82
					1187			Reserved Forest	
AP156	321501	2308971	20°52'20.39" N	73°17'2.9" E		91246	23°39'39.6"L		80
					645			Reserved Forest	
AP157	322089	2308703	20°52'11.89" N	73°17'23.32" E		91891	14°55'36.5"R		82
					493				
AP158	322469	2308390	20°52'1.85" N	73°17'36.6" E		92384	19°44'29.7"L		82
					308				
AP159	322760	2308286	20°51'58.57" N	73°17'46.68" E		92692	30°53'49.9"R		83
					204				
AP160	322889	2308129	20°51'53.5" N	73°17'51.22" E		92896	22°16'41.5"R		84
					215				
AP161	322952	2307923	20°51'46.84" N	73°17'53.48" E		93111	21°19'53.3"L		85

South Olpad (GIS)-Nasik 765 kV D/c line									
AP No.	Easting	Northing	Latitude	Longitude	Span (Mtr.)	Cumulative Length (Mtr.)	Angle of Deviation	Remarks	Altitude (M)
					178				
AP162	323063	2307784	20°51'42.34" N	73°17'57.37" E		93290	10°37'55.8"R		89
					181				
AP163	323148	2307623	20°51'37.15" N	73°18'0.36" E		93471	25°2'51.5"L		88
					179				
AP164	323291	2307516	20°51'33.7" N	73°18'5.33" E		93650	50°27'25.8"R		85
					275				
AP165	323302	2307241	20°51'24.77" N	73°18'5.83" E		93924	19°2'20.1"L		89
					235				
AP166	323388	2307022	20°51'17.68" N	73°18'8.89" E		94160	51°24'50.1"L		91
					284				
AP167	323660	2306938	20°51'15.05" N	73°18'18.32" E		94444	30°44'16.4"R		92
					273				
AP168	323843	2306736	20°51'8.53" N	73°18'24.73" E		94717	20°56'36.2"R		92
					233			Single Railway Track Non Electrified	
AP169	323927	2306519	20°51'1.51" N	73°18'27.72" E		94950	26°53'53.7"L		91
					151				
AP170	324040	2306418	20°50'58.27" N	73°18'31.64" E		95101	47°50'7.6"L		87
					243				
AP171	324282	2306443	20°50'59.17" N	73°18'40" E		95344	32°55'51.8"R		85
					416				
AP172	324652	2306255	20°50'53.16" N	73°18'52.88" E		95760	17°5'26.2"R		89
					238			400 kV D/c line	
AP173	324823	2306089	20°50'47.83" N	73°18'58.86" E		95998	47°17'45.4"R		90

South Olpad (GIS)-Nasik 765 kV D/c line									
AP No.	Easting	Northing	Latitude	Longitude	Span (Mtr.)	Cumulative Length (Mtr.)	Angle of Deviation	Remarks	Altitude (M)
					229				
AP174	324818	2305860	20°50'40.38" N	73°18'58.75" E		96227	39°2'27.2"R		93
					332				
AP175	324603	2305607	20°50'32.1" N	73°18'51.41" E		96558	30°3'15.7"L		92
					319				
AP176	324545	2305294	20°50'21.88" N	73°18'49.54" E		96878	38°1'35.3"L		89
					499				
AP177	324777	2304852	20°50'7.58" N	73°18'57.71" E		97377	35°28'57.2"R		87
					667				
AP178	324686	2304191	20°49'46.06" N	73°18'54.81" E		98044	43°56'36.5"R		95
					232				
AP179	324504	2304047	20°49'41.34" N	73°18'48.56" E		98275	48°29'12.2"L		96
					245				
AP180	324490	2303803	20°49'33.38" N	73°18'48.17" E		98520	15°25'5"R		96
					218			SH-165	
AP181	324420	2303596	20°49'26.65" N	73°18'45.83" E		98738	12°9'42.9"L		95
					232				
AP182	324394	2303366	20°49'19.16" N	73°18'45" E		98970	6°33'17"R		94
					217			Kaveri River	
AP183	324345	2303155	20°49'12.29" N	73°18'43.38" E		99186	42°50'53"L		95
					391				
AP184	324539	2302816	20°49'1.31" N	73°18'50.22" E		99578	29°52'18"L		92
					459				
AP185	324935	2302584	20°48'53.89" N	73°19'4.01" E		100037	39°48'39.1"R		90
					630				

South Olpad (GIS)-Nasik 765 kV D/c line									
AP No.	Easting	Northing	Latitude	Longitude	Span (Mtr.)	Cumulative Length (Mtr.)	Angle of Deviation	Remarks	Altitude (M)
AP186	325149	2301991	20°48'34.7" N	73°19'11.6" E		100666	27°15'53.2"R		97
					306				
AP187	325109	2301688	20°48'24.84" N	73°19'10.34" E		100972	3°20'22.2"L		100
					204			Kaveri River	
AP188	325095	2301485	20°48'18.22" N	73°19'9.91" E		101176	38°49'28"L		93
					501				
AP189	325380	2301073	20°48'4.93" N	73°19'19.92" E		101677	43°36'39.2"R		95
					209			SH-15 (Chikhi-Vansda) & Gujarat Gas Pipe Line	
AP190	325347	2300866	20°47'58.2" N	73°19'18.88" E		101886	24°22'29.8"L		97
					372				
AP191	325447	2300508	20°47'46.57" N	73°19'22.44" E		102258	37°18'3.6"R		105
					348				
AP192	325317	2300185	20°47'36.02" N	73°19'18.08" E		102606	36°58'40.2"L		102
					472				
AP193	325441	2299729	20°47'21.26" N	73°19'22.51" E		103078	40°4'17.3"R		101
					1525				
AP194	324799	2298347	20°46'36.08" N	73°19'0.8" E		104602	6°22'42.1"L		102
					911				
AP195	324509	2297483	20°46'7.91" N	73°18'51.11" E		105513	11°11'1"L		104
					617				
AP196	324430	2296871	20°45'47.99" N	73°18'48.6" E		106130	44°53'27.4"L		111
					324				
AP197	324627	2296615	20°45'39.71" N	73°18'55.51" E		106454	40°46'54.8"L		111

South Olpad (GIS)-Nasik 765 kV D/c line									
AP No.	Easting	Northing	Latitude	Longitude	Span (Mtr.)	Cumulative Length (Mtr.)	Angle of Deviation	Remarks	Altitude (M)
					282				
AP198	324904	2296557	20°45'37.94" N	73°19'5.09" E		106736	12°1'5.4"R		113
					378				
AP199	325250	2296405	20°45'33.12" N	73°19'17.11" E		107114	13°6'2.2"R		119
					336				
AP200	325519	2296205	20°45'26.68" N	73°19'26.47" E		107450	38°40'42.2"R		125
					216				
AP201	325573	2295996	20°45'19.91" N	73°19'28.42" E		107665	10°37'28.1"R		122
					399			Kaveri River	
AP202	325600	2295598	20°45'6.98" N	73°19'29.5" E		108064	34°41'53.5"R		127
					286				
AP203	325454	2295353	20°44'58.96" N	73°19'24.53" E		108350	38°12'56.7"L		123
					306				
AP204	325493	2295049	20°44'49.09" N	73°19'26" E		108656	10°38'48.9"L		130
					273				
AP205	325578	2294789	20°44'40.67" N	73°19'29.03" E		108929	57°17'10.3"R		132
					264				
AP206	325411	2294585	20°44'33.97" N	73°19'23.34" E		109193	22°52'2.4"L		132
					276			Kaveri River	
AP207	325334	2294320	20°44'25.33" N	73°19'20.75" E		109469	3°22'59.8"L		130
					491				
AP208	325223	2293842	20°44'9.74" N	73°19'17.11" E		109960	23°18'35.8"L		129
					522				
AP209	325317	2293328	20°43'53.08" N	73°19'20.53" E		110482	21°5'5.6"R		138
					200				

South Olpad (GIS)-Nasik 765 kV D/c line									
AP No.	Easting	Northing	Latitude	Longitude	Span (Mtr.)	Cumulative Length (Mtr.)	Angle of Deviation	Remarks	Altitude (M)
AP210	325280	2293131	20°43'46.67" N	73°19'19.32" E		110682	2°40'51.8"R		132
					226			66 kV D/c Tower	
AP211	325227	2292912	20°43'39.5" N	73°19'17.58" E		110908	17°17'33.3"R		134
					231				
AP212	325109	2292713	20°43'33.01" N	73°19'13.57" E		111139	24°40'57"L		136
					219				
AP213	325086	2292495	20°43'25.92" N	73°19'12.86" E		111358	58°57'26.8"L		140
					199				
AP214	325245	2292375	20°43'22.08" N	73°19'18.38" E		111557	32°45'29.5"L		140
					157				
AP215	325401	2292364	20°43'21.75" N	73°19'23.78" E		111714	51°42'28.5"R		144
					221			Up Coming Railway & NH-56	
AP216	325524	2292180	20°43'15.83" N	73°19'28.11" E		111934	3°19'49.8"R		145
					212				
AP217	325633	2291998	20°43'9.93" N	73°19'31.91" E		112147	34°20'4.9"L		142
					194				
AP218	325809	2291916	20°43'7.32" N	73°19'38.03" E		112341	36°41'35.3"R		149
					382			Reserved Forest	
AP219	325990	2291579	20°42'56.45" N	73°19'44.4" E		112723	8°33'45.2"R		226
					321			Reserved Forest	
AP220	326098	2291277	20°42'46.66" N	73°19'48.25" E		113044	32°27'28.4"L		254
					262			Proposed 800 kV HVDC Barmer II-Kalam & Reserved Forest	

South Olpad (GIS)-Nasik 765 kV D/c line									
AP No.	Easting	Northing	Latitude	Longitude	Span (Mtr.)	Cumulative Length (Mtr.)	Angle of Deviation	Remarks	Altitude (M)
AP221	326305	2291117	20°42'41.51" N	73°19'55.45" E		113305	33°22'1.8"R		238
					407			Reserved Forest	
AP222	326436	2290731	20°42'29.02" N	73°20'0.13" E		113713	47°5'40.4"L		180
					324			Reserved Forest	
AP223	326732	2290599	20°42'24.82" N	73°20'10.39" E		114036	44°31'54.2"R		160
					317				
AP224	326847	2290304	20°42'15.27" N	73°20'14.48" E		114353	14°54'13.4"L		165
					496				
AP225	327140	2289905	20°42'2.38" N	73°20'24.76" E		114849	25°8'13.9"R		163
					384				
AP226	327214	2289527	20°41'50.14" N	73°20'27.46" E		115233	35°53'5.4"L		167
					340				
AP227	327463	2289296	20°41'42.68" N	73°20'36.13" E		115573	49°54'35.9"R		165
					363				
AP228	327445	2288933	20°41'30.88" N	73°20'35.63" E		115936	34°44'35"L		166
					594				
AP229	327758	2288428	20°41'14.57" N	73°20'46.64" E		116531	41°23'18.8"R		166
					480			Reserved Forest	
AP230	327679	2287955	20°40'59.14" N	73°20'44.06" E		117011	29°56'12.9"L		197
					503			Reserved Forest	
AP231	327854	2287483	20°40'43.87" N	73°20'50.29" E		117514	32°9'13.3"L		178
					179			Reserved Forest	
AP232	327997	2287374	20°40'40.38" N	73°20'55.24" E		117693	39°33'56.2"L		180
					337				
AP233	328334	2287387	20°40'40.9" N	73°21'6.89" E		118030	28°6'7.6"R		216

South Olpad (GIS)-Nasik 765 kV D/c line									
AP No.	Easting	Northing	Latitude	Longitude	Span (Mtr.)	Cumulative Length (Mtr.)	Angle of Deviation	Remarks	Altitude (M)
					300				
AP234	328604	2287255	20°40'36.71" N	73°21'16.26" E		118331	41°49'29"R		206
					455				
AP235	328776	2286833	20°40'23.05" N	73°21'22.36" E		118786	32°14'22.1"L		185
					823			Reserved Forest	
AP236	329446	2286354	20°40'7.7" N	73°21'45.67" E		119610	4°26'42.5"R		256
					322			Reserved Forest	
AP237	329692	2286148	20°40'1.06" N	73°21'54.25" E		119931	10°43'56.6"R		311
					283			Reserved Forest	
AP238	329871	2285929	20°39'54" N	73°22'0.51" E		120214	1°49'29.9"L		270
					224			Reserved Forest	
AP239	330018	2285760	20°39'48.56" N	73°22'5.65" E		120438	25°59'47.6"L		226
					710			Reserved Forest	
AP240	330672	2285483	20°39'39.78" N	73°22'28.34" E		121148	9°14'37.9"R		309
					404			Reserved Forest	
AP241	331014	2285269	20°39'32.9" N	73°22'40.22" E		121552	5°35'52"L		362
					578			Reserved Forest	
AP242	331531	2285010	20°39'24.66" N	73°22'58.19" E		122130	12°48'2.9"R		307
					302				
AP243	331765	2284818	20°39'18.5" N	73°23'6.32" E		122432	23°29'7.3"R		425
					311				
AP244	331907	2284541	20°39'9.54" N	73°23'11.33" E		122744	4°13'59.6"L		457
					642				
AP245	332241	2283993	20°38'51.83" N	73°23'23.06" E		123386	18°13'7.2"L		522
					328				

South Olpad (GIS)-Nasik 765 kV D/c line									
AP No.	Easting	Northing	Latitude	Longitude	Span (Mtr.)	Cumulative Length (Mtr.)	Angle of Deviation	Remarks	Altitude (M)
AP246	332491	2283780	20°38'44.99" N	73°23'31.78" E		123714	12°53'8.9"L		569
					408			Reserved Forest	
AP247	332853	2283592	20°38'38.98" N	73°23'44.34" E		124122	17°57'43.9"R		431
					430			Reserved Forest	
AP248	333155	2283286	20°38'29.11" N	73°23'54.85" E		124552	34°39'40.4"L		424
					299			Reserved Forest	
AP249	333448	2283230	20°38'27.38" N	73°24'5" E		124850	29°2'16.4"R		379
					551			Reserved Forest	
AP250	333871	2282877	20°38'16.04" N	73°24'19.73" E		125401	18°24'59.1"L		313
					391			Reserved Forest	
AP251	334235	2282734	20°38'11.51" N	73°24'32.36" E		125793	2°40'51.5"R		292
					197			Reserved Forest	
AP252	334415	2282653	20°38'8.95" N	73°24'38.59" E		125989	5°17'23.1"R		277
					514			Reserved Forest	
AP253	334862	2282401	20°38'0.89" N	73°24'54.14" E		126503	19°44'17.4"L		260
					224			Reserved Forest	
AP254	335083	2282363	20°37'59.74" N	73°25'1.78" E		126727	17°36'53.3"R		246
					404			Reserved Forest	
AP255	335442	2282178	20°37'53.83" N	73°25'14.23" E		127131	9°18'54.7"R		250
					421			Reserved Forest	
AP256	335780	2281927	20°37'45.77" N	73°25'26" E		127552	33°33'14.1"R		238
					242			Sasu River & Reserved Forest	
AP257	335862	2281699	20°37'38.39" N	73°25'28.92" E		127794	45°1'12.5"L		241
					248			Reserved Forest	

South Olpad (GIS)-Nasik 765 kV D/c line									
AP No.	Easting	Northing	Latitude	Longitude	Span (Mtr.)	Cumulative Length (Mtr.)	Angle of Deviation	Remarks	Altitude (M)
AP258	336086	2281594	20°37'35.04" N	73°25'36.7" E		128042	50°51'18.1"R		244
					220			132 kV D/c line & Reserved Forest	
AP259	336140	2281381	20°37'28.13" N	73°25'38.6" E		128262	41°52'33.2"L		248
					296			Reserved Forest	
AP260	336385	2281215	20°37'22.8" N	73°25'47.14" E		128558	38°32'21.6"R		265
					237			Reserved Forest	
AP261	336456	2280988	20°37'15.46" N	73°25'49.66" E		128795	17°6'17.4"L		269
					391			Reserved Forest	
AP262	336677	2280666	20°37'5.05" N	73°25'57.4" E		129186	14°39'14.3"L		270
					634			Reserved Forest	
AP263	337156	2280251	20°36'51.7" N	73°26'14.1" E		129820	21°59'45.6"R		293
					705			Reserved Forest	
AP264	337478	2279623	20°36'31.39" N	73°26'25.4" E		130525	33°38'2.3"L		310
					682			Reserved Forest	
AP265	338073	2279290	20°36'20.74" N	73°26'46.07" E		131208	33°40'10.3"R		319
					715			Reserved Forest	
AP266	338398	2278654	20°36'0.14" N	73°26'57.52" E		131922	14°13'56.2"R		343
					504			Reserved Forest	
AP267	338510	2278162	20°35'44.2" N	73°27'1.55" E		132426	32°13'13.5"L		500
					522			Reserved Forest	
AP268	338880	2277793	20°35'32.32" N	73°27'14.44" E		132949	32°56'26.2"L		493
					574			Reserved Forest	
AP269	339442	2277674	20°35'28.61" N	73°27'33.88" E		133523	3°46'25.4"R		532
					556				

South Olpad (GIS)-Nasik 765 kV D/c line									
AP No.	Easting	Northing	Latitude	Longitude	Span (Mtr.)	Cumulative Length (Mtr.)	Angle of Deviation	Remarks	Altitude (M)
AP270	339977	2277523	20°35'23.86" N	73°27'52.42" E		134079	31°16'24.9"R		478
					951			Reserved Forest	
AP271	340625	2276827	20°35'1.43" N	73°28'15.02" E		135030	19°9'39.6"R		360
					1169			Reserved Forest	
AP272	341097	2275757	20°34'26.8" N	73°28'31.65" E		136199	17°40'41.6"L		323
					224			SH 22	
AP273	341245	2275590	20°34'21.4" N	73°28'36.81" E		136422	11°28'53.3"R		315
					410				
AP274	341450	2275235	20°34'9.91" N	73°28'44" E		136832	33°1'1.5"L		307
					308				
AP275	341724	2275095	20°34'5.46" N	73°28'53.51" E		137140	21°29'12.9"R		313
					245			Man River	
AP276	341886	2274912	20°33'59.54" N	73°28'59.18" E		137385	38°57'52"R		303
					267			Reserved Forest	
AP277	341898	2274645	20°33'50.87" N	73°28'59.68" E		137652	19°26'22.8"L		308
					279			Reserved Forest	
AP278	342003	2274386	20°33'42.48" N	73°29'3.37" E		137931	26°13'40.3"L		318
					453				
AP279	342341	2274084	20°33'32.76" N	73°29'15.14" E		138385	27°41'52.3"R		322
					1198			Reserved Forest	
AP280	342761	2272962	20°32'56.4" N	73°29'30.01" E		139583	18°18'7.3"L		468
					1179			Reserved Forest	
AP281	343501	2272043	20°32'26.75" N	73°29'55.83" E		140762	10°25'7.9"L		562
					236			Reserved Forest	
AP282	343680	2271889	20°32'21.78" N	73°30'2.06" E		140998	17°24'18.9"R		513

South Olpad (GIS)-Nasik 765 kV D/c line									
AP No.	Easting	Northing	Latitude	Longitude	Span (Mtr.)	Cumulative Length (Mtr.)	Angle of Deviation	Remarks	Altitude (M)
					284			Reserved Forest	
AP283	343829	2271648	20°32'13.99" N	73°30'7.31" E		141282	2°55'25.2"R		441
					626			Reserved Forest	
AP284	344132	2271100	20°31'56.27" N	73°30'17.93" E		141908	39°8'56.7"L		387
					433				
AP285	344534	2270939	20°31'51.13" N	73°30'31.85" E		142341	23°3'1.3"R		373
					321				
AP286	344761	2270711	20°31'43.81" N	73°30'39.77" E		142662	23°13'35.9"R		371
					723				
AP287	345030	2270040	20°31'22.04" N	73°30'49.25" E		143386	35°54'5.8"L		395
					730			Reserved Forest	
AP288	345647	2269650	20°31'9.54" N	73°31'10.67" E		144116	21°52'57"R		411
					681			Reserved Forest	
AP289	346046	2269097	20°30'51.69" N	73°31'24.61" E		144797	15°51'20.6"R		335
					355			Reserved Forest & Par River	
AP290	346167	2268764	20°30'40.88" N	73°31'28.89" E		145152	10°1'56.4"R		347
					1190			Reserved Forest	
AP291	346372	2267591	20°30'2.81" N	73°31'36.34" E		146342	31°31'15.6"L		387
					326				
AP292	346588	2267347	20°29'54.92" N	73°31'43.86" E		146668	28°29'39.8"R		373
					412				
AP293	346680	2266945	20°29'41.89" N	73°31'47.17" E		147080	19°54'40.5"L		405
					326			Reserved Forest	
AP294	346857	2266671	20°29'33.04" N	73°31'53.36" E		147407	36°26'37.9"L		443

South Olpad (GIS)-Nasik 765 kV D/c line									
AP No.	Easting	Northing	Latitude	Longitude	Span (Mtr.)	Cumulative Length (Mtr.)	Angle of Deviation	Remarks	Altitude (M)
					286			Reserved Forest	
AP295	347124	2266570	20°29'29.83" N	73°32'2.62" E		147692	30°50'29.8"R		455
					781			Reserved Forest	
AP296	347610	2265959	20°29'10.09" N	73°32'19.57" E		148473	12°30'13.7"L		517
					525				
AP297	348018	2265628	20°28'59.45" N	73°32'33.76" E		148998	11°10'56.4"R		568
					860			Reserved Forest	
AP298	348568	2264967	20°28'38.11" N	73°32'52.96" E		149859	13°20'8.2"L		493
					434			Reserved Forest	
AP299	348915	2264707	20°28'29.75" N	73°33'5" E		150292	21°4'16.8"L		546
					415			Reserved Forest	
AP300	349315	2264594	20°28'26.18" N	73°33'18.83" E		150708	27°53'5.6"R		567
					871			Reserved Forest	
AP301	349945	2263992	20°28'6.8" N	73°33'40.74" E		151579	0°46'42.2"L		602
					426			Reserved Forest	
AP302	350256	2263702	20°27'57.46" N	73°33'51.59" E		152004	26°25'7.6"L		659
					281				
AP303	350526	2263622	20°27'54.95" N	73°34'0.9" E		152285	25°22'6.1"R		686
					229			SH 21 (Palsane Barthare)	
AP304	350696	2263469	20°27'50.02" N	73°34'6.84" E		152514	35°38'1.2"R		667
					387			Reserved Forest	
AP305	350780	2263092	20°27'37.76" N	73°34'9.84" E		152901	33°10'44.5"L		575
					695			Reserved Forest	
AP306	351278	2262606	20°27'22.1" N	73°34'27.16" E		153596	44°26'15.4"L		539

South Olpad (GIS)-Nasik 765 kV D/c line									
AP No.	Easting	Northing	Latitude	Longitude	Span (Mtr.)	Cumulative Length (Mtr.)	Angle of Deviation	Remarks	Altitude (M)
					308				
AP307	351585	2262607	20°27'22.21" N	73°34'37.78" E		153904	21°8'54.4"R		545
					1094			Reserved Forest	
AP308	352606	2262214	20°27'9.73" N	73°35'13.12" E		154998	13°30'7"R		563
					318			Reserved Forest	
AP309	352868	2262034	20°27'3.95" N	73°35'22.22" E		155316	20°40'26.6"L		522
					371				
AP310	353229	2261945	20°27'1.16" N	73°35'34.67" E		155687	36°46'26.2"R		530
					551				
AP311	353578	2261519	20°26'47.4" N	73°35'46.86" E		156238	12°19'25.3"R		548
					1162				
AP312	354107	2260484	20°26'13.88" N	73°36'5.4" E		157401	23°44'27.1"R		507
					465				
AP313	354133	2260019	20°25'58.79" N	73°36'6.46" E		157866	13°12'31"L		496
					595			Reserved Forest	
AP314	354302	2259449	20°25'40.3" N	73°36'12.46" E		158460	23°35'8.7"R		515
					629			Reserved Forest	
AP315	354225	2258826	20°25'19.99" N	73°36'9.97" E		159089	51°46'35.9"L		558
					445			Reserved Forest	
AP316	354538	2258509	20°25'9.79" N	73°36'20.87" E		159534	17°5'49.4"R		505
					783				
AP317	354901	2257815	20°24'47.33" N	73°36'33.59" E		160317	23°23'40.5"L		473
					210			Par River	
AP318	355064	2257683	20°24'43.07" N	73°36'39.26" E		160527	22°22'55.1"R		473
					504			Reserved Forest	

South Olpad (GIS)-Nasik 765 kV D/c line									
AP No.	Easting	Northing	Latitude	Longitude	Span (Mtr.)	Cumulative Length (Mtr.)	Angle of Deviation	Remarks	Altitude (M)
AP319	355306	2257241	20°24'28.74" N	73°36'47.72" E		161031	38°5'47.7"L		495
					530			Reserved Forest	
AP320	355793	2257031	20°24'22.07" N	73°37'4.57" E		161561	1°39'54.8"R		565
					617			Reserved Forest	
AP321	356352	2256771	20°24'13.75" N	73°37'23.95" E		162178	25°7'26.6"R		668
					853			Reserved Forest	
AP322	356900	2256116	20°23'52.62" N	73°37'43.03" E		163032	41°24'26.7"L		676
					754			Reserved Forest	
AP323	357645	2256003	20°23'49.13" N	73°38'8.77" E		163786	34°18'42.4"R		713
					1933			Reserved Forest	
AP324	359060	2254685	20°23'6.66" N	73°38'57.92" E		165718	24°51'36.4"L		720
					847				
AP325	359865	2254422	20°22'58.3" N	73°39'25.77" E		166566	52°37'31.9"L		768
					922				
AP326	360624	2254944	20°23'15.49" N	73°39'51.82" E		167487	21°0'39.5"R		738
					305				
AP327	360921	2255015	20°23'17.88" N	73°40'2.03" E		167792	24°2'59.6"R		753
					960				
AP328	361865	2254839	20°23'12.41" N	73°40'34.64" E		168753	22°29'48.3"R		754
					808				
AP329	362542	2254399	20°22'58.26" N	73°40'58.12" E		169560	15°28'57.6"L		774
					828				
AP330	363331	2254149	20°22'50.34" N	73°41'25.4" E		170388	43°16'27.4"R		721
					724				
AP331	363684	2253516	20°22'29.86" N	73°41'37.75" E		171113	15°58'6.7"L		720

South Olpad (GIS)-Nasik 765 kV D/c line									
AP No.	Easting	Northing	Latitude	Longitude	Span (Mtr.)	Cumulative Length (Mtr.)	Angle of Deviation	Remarks	Altitude (M)
					829			Up Coming Railway line (Wagai-Nashik)	
AP332	364271	2252932	20°22'10.99" N	73°41'58.17" E		171941	11°39'18.9"L		711
					657				
AP333	364821	2252572	20°21'59.44" N	73°42'17.21" E		172598	1°35'9.2"L		697
					1225			Kadya River	
AP334	365864	2251930	20°21'38.81" N	73°42'53.35" E		173823	19°4'37.1"L		712
					1646				
AP335	367471	2251572	20°21'27.58" N	73°43'48.86" E		175469	7°34'31.7"R		752
					844				
AP336	368263	2251281	20°21'18.33" N	73°44'16.27" E		176314	16°36'56.2"R		735
					952				
AP337	369026	2250712	20°21'0" N	73°44'42.72" E		177265	4°31'8.2"R		712
					1240			Upcoming Railway line (Bilmora-Manmad)	
AP338	369958	2249894	20°20'33.62" N	73°45'15.09" E		178506	8°10'41"R		689
					906				
AP339	370547	2249205	20°20'11.38" N	73°45'35.58" E		179412	26°12'21.2"L		673
					822				
AP340	371302	2248881	20°20'1.02" N	73°46'1.69" E		180233	6°43'7.9"R		695
					1191				
AP341	372335	2248286	20°19'41.93" N	73°46'37.44" E		181425	30°27'15.4"L		692
					2175			Reserved Forest	
AP342	374510	2248305	20°19'43.06" N	73°47'52.42" E		183600	6°39'6"R		742
					2212			Reserved Forest	

South Olpad (GIS)-Nasik 765 kV D/c line									
AP No.	Easting	Northing	Latitude	Longitude	Span (Mtr.)	Cumulative Length (Mtr.)	Angle of Deviation	Remarks	Altitude (M)
AP343	376709	2248068	20°19'35.87" N	73°49'8.33" E		185812	11°14'48.7"L		730
					231			220 kV D/c line & Reserved Forest	
AP344	376939	2248089	20°19'36.59" N	73°49'16.25" E		186043	23°52'15"R		728
					692			Reserved Forest	
AP345	377594	2247866	20°19'29.5" N	73°49'38.89" E		186735	20°19'11.9"R		716
					919			Reserved Forest	
AP346	378307	2247287	20°19'10.81" N	73°50'3.62" E		187654	18°34'8.9"L		709
					843			Reserved Forest	
AP347	379097	2246991	20°19'1.38" N	73°50'30.91" E		188497	13°35'12.4"L		708
					1380			Reserved Forest	
AP348	380467	2246824	20°18'56.27" N	73°51'18.18" E		189877	35°10'4.1"R		665
					343			Dev River	
AP349	380721	2246594	20°18'48.85" N	73°51'27" E		190219	30°40'33.9"L		693
					828			Reserved Forest	
AP350	381532	2246430	20°18'43.7" N	73°51'55.01" E		191047	8°2'52.4"L		697
					801			Reserved Forest	
AP351	382332	2246383	20°18'42.34" N	73°52'22.58" E		191848	13°35'47.1"R		691
					810			Reserved Forest	
AP352	383106	2246147	20°18'34.82" N	73°52'49.34" E		192658	4°38'45.9"L		679
					240			SH-17 (Saputara-Nashik) & Reserved Forest	
AP353	383341	2246095	20°18'33.2" N	73°52'57.45" E		192898	13°12'39.3"R		687
					751			Reserved Forest	

South Olpad (GIS)-Nasik 765 kV D/c line									
AP No.	Easting	Northing	Latitude	Longitude	Span (Mtr.)	Cumulative Length (Mtr.)	Angle of Deviation	Remarks	Altitude (M)
AP354	384019	2245771	20°18'22.82" N	73°53'20.88" E		193649	23°58'13.9"R		709
					1629			Reserved Forest	
AP355	385076	2244533	20°17'42.76" N	73°53'57.62" E		195278	35°14'14.3"L		693
					1742			Reserved Forest	
AP356	386764	2244103	20°17'29.15" N	73°54'55.91" E		197019	17°46'26.2"R		692
					1007				
AP357	387618	2243569	20°17'11.94" N	73°55'25.46" E		198027	23°36'27.5"L		682
					717				
AP358	388327	2243463	20°17'8.66" N	73°55'49.94" E		198744	6°44'33.9"L		677
					571				
AP359	388898	2243446	20°17'8.23" N	73°56'9.64" E		199315	12°8'55.8"L		679
					248			NH-953	
AP360	389142	2243491	20°17'9.74" N	73°56'18.02" E		199563	6°32'51.5"R		682
					789				
AP361	389929	2243545	20°17'11.65" N	73°56'45.13" E		200352	50°10'47.7"R		669
					757				
AP362	390452	2242998	20°16'53.98" N	73°57'3.28" E		201108	16°47'20.6"L		663
					487				
AP363	390875	2242758	20°16'46.27" N	73°57'17.93" E		201595	28°13'23.8"R		660
					569				
AP364	391179	2242277	20°16'30.68" N	73°57'28.51" E		202164	20°47'6.3"L		664
					507				
AP365	391584	2241973	20°16'20.86" N	73°57'42.55" E		202671	23°10'0.1"R		669
					601				
AP366	391884	2241452	20°16'3.97" N	73°57'52.99" E		203272	18°10'59.5"R		664

South Olpad (GIS)-Nasik 765 kV D/c line									
AP No.	Easting	Northing	Latitude	Longitude	Span (Mtr.)	Cumulative Length (Mtr.)	Angle of Deviation	Remarks	Altitude (M)
					414				
AP367	391968	2241046	20°15'50.8" N	73°57'55.98" E		203686	51°54'21.1"L		659
					472				
AP368	392391	2240836	20°15'44.06" N	73°58'10.6" E		204158	34°5'33.1"R		662
					562				
AP369	392668	2240348	20°15'28.22" N	73°58'20.24" E		204720	25°24'8"L		662
					587				
AP370	393148	2240010	20°15'17.35" N	73°58'36.88" E		205307	23°19'13.5"R		664
					489				
AP371	393405	2239594	20°15'3.85" N	73°58'45.8" E		205796	18°57'53.7"L		661
					420				
AP372	393729	2239327	20°14'55.24" N	73°58'57.05" E		206216	43°33'6.8"L		660
					321				
AP373	394050	2239350	20°14'56.06" N	73°59'8.08" E		206538	25°11'23.4"R		655
					355				
AP374	394381	2239223	20°14'51.97" N	73°59'19.54" E		206893	20°16'54.6"L		656
					298				
AP375	394679	2239218	20°14'51.9" N	73°59'29.8" E		207191	25°32'34.4"R		657
					389				
AP376	395028	2239046	20°14'46.36" N	73°59'41.86" E		207580	16°5'53.4"R		655
					273				
AP377	395230	2238861	20°14'40.4" N	73°59'48.85" E		207853	43°6'20.9"L		654
					230				
AP378	395460	2238864	20°14'40.53" N	73°59'56.79" E		208084	21°43'18.1"L		652
					297				

South Olpad (GIS)-Nasik 765 kV D/c line									
AP No.	Easting	Northing	Latitude	Longitude	Span (Mtr.)	Cumulative Length (Mtr.)	Angle of Deviation	Remarks	Altitude (M)
AP379	395735	2238977	20°14'44.27" N	74°0'6.23" E		208381	34°24'51"R		658
					405				
AP380	396131	2238893	20°14'41.6" N	74°0'19.91" E		208786	36°55'29.4"L		655
					378				
AP381	396474	2239052	20°14'46.85" N	74°0'31.69" E		209164	25°57'46.9"R		654
					435				
AP382	396909	2239045	20°14'46.68" N	74°0'46.69" E		209599	23°5'55.2"R		650
					450				
AP383	397320	2238861	20°14'40.78" N	74°1'0.88" E		210049	18°59'20.5"L		646
					224			132 kV S/c line	
AP384	397543	2238840	20°14'40.16" N	74°1'8.58" E		210273	18°6'39.5"L		645
					419				
AP385	397951	2238934	20°14'43.3" N	74°1'22.62" E		210692	35°52'2.6"R		650
					405				
AP386	398324	2238777	20°14'38.24" N	74°1'35.5" E		211097	39°21'32.7"R		651
					315				
AP387	398470	2238498	20°14'29.21" N	74°1'40.6" E		211411	21°53'13.8"L		648
					465				
AP388	398824	2238197	20°14'19.48" N	74°1'52.87" E		211876	40°42'30.1"L		644
					346				
AP389	399170	2238199	20°14'19.61" N	74°2'4.79" E		212222	18°55'51.2"R		649
					410				
AP390	399559	2238068	20°14'15.43" N	74°2'18.2" E		212632	17°18'4"R		655
					308				
AP391	399808	2237888	20°14'9.6" N	74°2'26.84" E		212940	32°45'17.5"L		652

South Olpad (GIS)-Nasik 765 kV D/c line									
AP No.	Easting	Northing	Latitude	Longitude	Span (Mtr.)	Cumulative Length (Mtr.)	Angle of Deviation	Remarks	Altitude (M)
					433				
AP392	400241	2237864	20°14'8.91" N	74°2'41.74" E		213373	24°46'50.8"R		657
					678				
AP393	400840	2237546	20°13'58.69" N	74°3'2.45" E		214051	39°7'56.5"R		647
					217			220 kV D/C line	
AP394	400924	2237347	20°13'52.21" N	74°3'5.4" E		214268	1°21'9.5"L		646
					293				
AP395	401045	2237079	20°13'43.54" N	74°3'9.61" E		214561	26°26'49.6"R		643
					229				
AP396	401036	2236850	20°13'36.08" N	74°3'9.36" E		214791	35°15'3.5"L		640
					313				
AP397	401207	2236588	20°13'27.59" N	74°3'15.3" E		215104	16°34'42.8"L		640
					239			NH-60	
AP398	401389	2236433	20°13'22.59" N	74°3'21.61" E		215342	35°59'48.4"L		641
					291				
AP399	401679	2236411	20°13'21.93" N	74°3'31.61" E		215634	29°14'54.4"R		642
					322				
AP400	401948	2236233	20°13'16.18" N	74°3'40.9" E		215956	14°4'45.9"R		639
					151				
AP401	402050	2236122	20°13'12.58" N	74°3'44.42" E		216107	17°9'41.2"R		638
					454				
AP402	402243	2235711	20°12'59.26" N	74°3'51.16" E		216560	6°26'8"R		635
					427				
AP403	402380	2235307	20°12'46.13" N	74°3'55.96" E		216987	11°2'53.9"L		636
					501				

South Olpad (GIS)-Nasik 765 kV D/c line									
AP No.	Easting	Northing	Latitude	Longitude	Span (Mtr.)	Cumulative Length (Mtr.)	Angle of Deviation	Remarks	Altitude (M)
AP404	402629	2234872	20°12'32.04" N	74°4'4.62" E		217488	6°38'8.4"L		635
					463				
AP405	402903	2234500	20°12'19.98" N	74°4'14.16" E		217951	14°8'23.8"L		637
					439				
AP406	403243	2234221	20°12'10.96" N	74°4'25.91" E		218390	23°42'2.5"R		634
					447				
AP407	403445	2233822	20°11'58.02" N	74°4'32.95" E		218838	13°42'15.4"R		625
					789				
AP408	403625	2233054	20°11'33.07" N	74°4'39.29" E		219626	9°59'2.7"R		620
					1199				
AP409	403691	2231857	20°10'54.16" N	74°4'41.81" E		220825	0°52'6.5"R		618
					205			400 kV line AWBD_Boisar (PG)_ DCQ	
AP410	403699	2231652	20°10'47.5" N	74°4'42.13" E		221030	41°1'55.9"L		617
					285				
AP411	403895	2231445	20°10'40.8" N	74°4'48.9" E		221315	34°27'6.5"R		620
					487				
AP412	403970	2230964	20°10'25.15" N	74°4'51.59" E		221802	34°9'26"L		612
					203				
AP413	404109	2230815	20°10'20.35" N	74°4'56.39" E		222005	16°37'10.6"R		607
					239				
AP414	404215	2230601	20°10'13.4" N	74°5'0.1" E		222244	18°42'51.9"R		609
					728				
AP415	404313	2229879	20°9'49.94" N	74°5'3.61" E		222973	31°57'15.1"L		604

South Olpad (GIS)-Nasik 765 kV D/c line									
AP No.	Easting	Northing	Latitude	Longitude	Span (Mtr.)	Cumulative Length (Mtr.)	Angle of Deviation	Remarks	Altitude (M)
					250				
AP416	404472	2229687	20°9'43.72" N	74°5'9.13" E		223222	21°35'33.2"L		606
					424				
AP417	404844	2229483	20°9'37.15" N	74°5'21.97" E		223646	21°40'22.4"R		607
					307				
AP418	405039	2229247	20°9'29.5" N	74°5'28.75" E		223953	28°9'12.6"R		607
					246			132 kV Manmad Nashik DCDC	
AP419	405088	2229006	20°9'21.68" N	74°5'30.47" E		224198	35°23'7"L		599
					519				
AP420	405467	2228651	20°9'10.2" N	74°5'43.57" E		224717	18°9'39.2"R		600
					543				
AP421	405727	2228175	20°8'54.75" N	74°5'52.63" E		225260	21°16'25.8"L		597
					942				
AP422	406448	2227569	20°8'35.16" N	74°6'17.57" E		226202	32°2'19.8"R		595
					655				
AP423	406649	2226946	20°8'14.93" N	74°6'24.61" E		226857	25°24'21.3"L		592
					446				
AP424	406955	2226621	20°8'4.43" N	74°6'35.2" E		227302	20°47'44.6"R		591
					615				
AP425	407190	2226053	20°7'45.98" N	74°6'43.42" E		227918	37°32'57.5"R		586
					522				
AP426	407055	2225549	20°7'29.57" N	74°6'38.84" E		228439	32°31'43.3"L		589
					424				
AP427	407182	2225144	20°7'16.43" N	74°6'43.31" E		228864	36°34'35.6"L		585

South Olpad (GIS)-Nasik 765 kV D/c line									
AP No.	Easting	Northing	Latitude	Longitude	Span (Mtr.)	Cumulative Length (Mtr.)	Angle of Deviation	Remarks	Altitude (M)
					716				
AP428	407762	2224724	20°7'2.85" N	74°7'3.36" E		229580	21°9'11.6"R		586
					405			Vaintha River	
AP429	407982	2224384	20°6'51.84" N	74°7'10.99" E		229985	2°5'19.7"R		582
					251			Railway Double Track Electrified-Pol.No-223/7 ,223/8	
AP430	408111	2224169	20°6'44.86" N	74°7'15.46" E		230236	29°52'11"L		581
					577				
AP431	408614	2223886	20°6'35.75" N	74°7'32.84" E		230813	29°10'11.9"R		580
					735				
AP432	408998	2223259	20°6'15.42" N	74°7'46.19" E		231548	18°8'39.8"R		583
					536				
AP433	409122	2222738	20°5'58.49" N	74°7'50.56" E		232084	23°53'12.6"L		579
					878				
AP434	409654	2222039	20°5'35.84" N	74°8'8.99" E		232962	9°56'32.1"L		574
					285				
AP435	409863	2221845	20°5'29.58" N	74°8'16.22" E		233247	36°12'44.5"R		572
					481				
AP436	409955	2221373	20°5'14.24" N	74°8'19.46" E		233728	36°15'58.1"L		570
					407				
AP437	410254	2221097	20°5'5.32" N	74°8'29.8" E		234135	21°16'11.4"R		573
					374				
AP438	410418	2220761	20°4'54.4" N	74°8'35.5" E		234509	46°23'51.8"L		572
					590				

South Olpad (GIS)-Nasik 765 kV D/c line									
AP No.	Easting	Northing	Latitude	Longitude	Span (Mtr.)	Cumulative Length (Mtr.)	Angle of Deviation	Remarks	Altitude (M)
AP439	410980	2220582	20°4'48.68" N	74°8'54.89" E		235099	40°24'39.3"R		569
					276				
AP440	411126	2220348	20°4'41.09" N	74°8'59.96" E		235375	21°42'33.9"R		570
					491				
AP441	411213	2219865	20°4'25.39" N	74°9'3.06" E		235866	17°5'52.1"R		566
					229			SH-30 (Aurangabad-Nashik)	
AP442	411186	2219637	20°4'17.98" N	74°9'2.16" E		236095	21°58'36.5"L		565
					428				
AP443	411298	2219224	20°4'4.55" N	74°9'6.08" E		236524	34°55'55.6"L		565
					718				
AP444	411849	2218763	20°3'49.64" N	74°9'25.13" E		237242	18°16'13.7"L		566
					1103				
AP445	412874	2218356	20°3'36.58" N	74°10'0.48" E		238345	18°9'12.4"R		571
					344				
AP446	413138	2218135	20°3'29.45" N	74°10'9.62" E		238689	44°30'52"L		578
					331				
AP447	413468	2218163	20°3'30.38" N	74°10'20.96" E		239020	35°27'41.8"R		577
					336				
AP448	413757	2217991	20°3'24.84" N	74°10'30.94" E		239356	28°51'0.8"R		579
					574				
AP449	414047	2217496	20°3'8.78" N	74°10'41.02" E		239930	23°31'23"L		573
					405				
AP450	414374	2217257	20°3'1.08" N	74°10'52.32" E		240335	24°32'44.9"R		572
					1215				

South Olpad (GIS)-Nasik 765 kV D/c line									
AP No.	Easting	Northing	Latitude	Longitude	Span (Mtr.)	Cumulative Length (Mtr.)	Angle of Deviation	Remarks	Altitude (M)
AP451	414970	2216198	20°2'26.73" N	74°11'13.01" E		241550	25°48'13.3"L		574
					499				
AP452	415380	2215913	20°2'17.52" N	74°11'27.17" E		242049	16°37'55.4"R		575
					249			BPCL Pipe Line	
AP453	415535	2215719	20°2'11.22" N	74°11'32.53" E		242297	8°15'49.1"R		571
					1031				
AP454	416055	2214829	20°1'42.35" N	74°11'50.57" E		243328	32°15'26.3"R		562
					987				
AP455	416021	2213843	20°1'10.27" N	74°11'49.56" E		244315	6°54'29.2"L		558
					496				
AP456	416063	2213349	20°0'54.22" N	74°11'51.11" E		244810	30°22'10.5"R		552
					408				
AP457	415888	2212980	20°0'42.19" N	74°11'45.13" E		245219	11°38'6.3"R		550
					384				
AP458	415656	2212674	20°0'32.18" N	74°11'37.21" E		245603	4°54'14.8"L		551
					416				
AP459	415435	2212322	20°0'20.7" N	74°11'29.65" E		246019	36°3'14"L		548
					459				
AP460	415466	2211864	20°0'5.81" N	74°11'30.8" E		246478	30°55'45.8"L		547
					670				
AP461	415849	2211314	19°59'47.98" N	74°11'44.05" E		247148	49°40'4"R		544
					524				
AP462	415714	2210807	19°59'31.49" N	74°11'39.52" E		247671	15°23'9.6"L		545
					297				
AP463	415717	2210511	19°59'21.84" N	74°11'39.66" E		247968	29°7'11.7"R		534

South Olpad (GIS)-Nasik 765 kV D/c line									
AP No.	Easting	Northing	Latitude	Longitude	Span (Mtr.)	Cumulative Length (Mtr.)	Angle of Deviation	Remarks	Altitude (M)
					450			Godavari River	
AP464	415502	2210116	19°59'8.95" N	74°11'32.32" E		248418	29°39'24.6"R		537
					931				
AP465	414710	2209625	19°58'52.88" N	74°11'5.15" E		249350	26°41'25"L		541
					1573				
AP466	413887	2208285	19°58'9.16" N	74°10'37.06" E		250922	11°48'16.7"L		553
					2010				
AP467	413208	2206394	19°57'7.52" N	74°10'14.02" E		252932	6°22'22.5"R		560
					1935				
AP468	412356	2204656	19°56'10.86" N	74°9'45" E		254867	14°20'37.9"R		569
					514				
AP469	412022	2204265	19°55'58.08" N	74°9'33.59" E		255381	9°15'51.1"L		571
					1182				
AP470	411410	2203254	19°55'25.1" N	74°9'12.71" E		256563	26°17'50.4"L		571
					1782				
AP471	411257	2201479	19°54'27.32" N	74°9'7.78" E		258345	15°31'6.9"R		578
					760				
AP472	410992	2200766	19°54'4.1" N	74°8'58.78" E		259105	48°9'21.9"L		581
					510				
AP473	411230	2200315	19°53'49.45" N	74°9'7.02" E		259616	24°14'0.5"R		581
					998				
AP474	411290	2199318	19°53'17.05" N	74°9'9.29" E		260614	26°59'51"L		575
					268			Dev River	
AP475	411426	2199088	19°53'9.56" N	74°9'14" E		260882	13°33'37.1"L		575
					1310				

South Olpad (GIS)-Nasik 765 kV D/c line									
AP No.	**Easting**	**Northing**	**Latitude**	**Longitude**	**Span (Mtr.)**	**Cumulative Length (Mtr.)**	**Angle of Deviation**	**Remarks**	**Altitude (M)**
AP476	412338	2198146	19°52'39.08" N	74°9'45.5" E		262192	14°52'15.2"R		587
					741				
AP477	412699	2197499	19°52'18.11" N	74°9'58.03" E		262933	2°15'46.9"L		596
					244			SH-35 (Devpur-Panchale)	
AP478	412826	2197291	19°52'11.36" N	74°10'2.44" E		263176	37°46'21.5"L		594
					1926				
AP479	414626	2196608	19°51'49.43" N	74°11'4.45" E		265102	33°48'29.6"L		586
					308				
AP480	414926	2196678	19°51'51.73" N	74°11'14.75" E		265410	44°11'10.3"L		587
					318				
AP481	415098	2196945	19°52'0.44" N	74°11'20.62" E		265727	28°4'51.6"L		592
					122				
Gantry	415108	2197066	19°52'4.4" N	74°11'20.94" E		265849		Proposed 765/400 kV Nashik Substation	590

3.4: Summary of the proposed route

South Olpad (GIS) - Nasik 765 kV D/c Line		
SL. No.	**Description**	**Proposed Route**
1	Bee line length	220.874KM
	Line Length	265.849 KM
2	Terrain	Plain with Constraints
	a) Plain	80%
	b) Undulated terrain	20%
3	Snow bound Route (in Meters)	Nil
4	Length of line in heavy rainfall area which may affect working season (in Meters)	Nil
5	Angle Points	481 Nos.
6	Forest	
	a) Reserve Forest	Approx. 40.8 Km
	b) Protected Forest	Nil
	c) Open Scrub	Along the Route
7	Wildlife infringement	Nil
8	Animal/Bird Sanctuary	Nil
9	infringement of endangered species habitat	Nil
10	National Park	Nil
11	Great Indian Bustard (GIB) area (Priority/ Potential Zone)	Nil
12	Creek, Marshy and low-laying area	Nil
13	No. of Pile/Special Foundation required	Nil
14	Transportation & Maintenance	Available
15	Power Line crossings (110 kV & above)	34 Nos.
16	Telecom Line Crossing	Nil
17	Railway crossings	8 Nos.
18	Airport/Air strip	Surat International Airport, Nashik International Airport & Shirdi International Airport
19	Upcoming Airport/Aviation zone/Airforce Station	Nil
20	Army cantonment/Mining/No go areas/Airstrips	Nil
21	River crossings	18 Nos.
	a) Major	Nil
	b) Minor	18 Nos.
22	NH Crossings	6 Nos.
23	SH Crossings	13 Nos.
24	Existing Gas/Petroleum/Oil Pipeline	12 Nos. AP7-AP8 (GSPL Gas Pipe Line) AP8-AP9 (GGL Pipe Line) AP10-AP11 (Gail Gas Pipe Line)

South Olpad (GIS) - Nasik 765 kV D/c Line		
SL. No.	**Description**	**Proposed Route**
		AP17-AP18 (Gail Gas Pipe Line) AP21-AP22 (PIL Pipe Line) AP22-AP23 (GSPL Gas Pipe Line) AP30-AP31 (Torrent -GSPL Gas Pipe Line) AP98-AP99 (GGL Home District Gas) AP134-AP135 (Adani Gas Pipe Line) AP148-AP149 (Adani Gas Pipe Line) AP189-AP190 (Gujarat Gas Pipe Line) AP452-AP453 (BPCL Pipe Line)
25	Proposed Gas/Petroleum/Oil Pipeline	Nil
26	Land Availability (if required for Acquisition)	Available
	i) Extent of land available	Available
	ii) Land use pattern (agricultural, barren, forest etc.)	Agricultural & Forest
	iii) Land ownership (Govt. Private, trible, non-tribal etc)	Govt. & Private
27	Approaches for construction	Available
28	Wind Zone	I, II & III
29	State	Maharashtra & Gujarat
30	District	Nashik, Navsari, Surat, Tapi & Valsad

Power Line Crossing (110 kV& above)

South Olpad (GIS) - Nasik 765 kV D/c Line				
Sr No.	**Circuit Details**	**Voltage rating in kV / Crossing**	**Name of Owner (SEB/DOT)**	**Crossing in between Angle Point**
1	Double circuit	765 kV	U/C Ahmedabad – South Olpad (GIS)	AP3-AP4
2	Double circuit	765 kV	U/C Vadodara (GIS) - South Olpad (GIS)	AP5-AP6
3	Double circuit	765 kV	U/C South Olpad (GIS) – Boisar-II (GIS)	AP7-AP8
4	Double circuit	500 kV	Proposed South Olpad HVDC -KPS 3	AP10-AP11
5	Double circuit	220 kV	(KWS-HAL) PGCIL	AP11-AP12
6	Double circuit	220 kV	(JEAS-KOSAMBA)	AP14-AP15
7	Double circuit	220 kV	Hazira - Mangrol T.N 123-T.N 124	AP37-AP38
8	Double circuit	220 kV	Utran -Mangrol	AP39-AP40
9	Double circuit	220 kV	220 kV D/c line	AP41-AP42
10	Double circuit	220 kV	220 kV D/c line	AP44-AP45
11	Double circuit	220 kV	220 kV D/c line	AP46-AP47
12	Double circuit	400 kV	Torrent Energy (Dgen-Navsari) -T.N 248-T.N249	AP54-AP55
13	Double circuit	765 kV	Ahmedabad -Navsari (U/C)	AP58-AP59
14	Double circuit	765 kV	Vataman Switching Station – Navsari (New) (Gis)	AP59-AP60
15	Under Construction	Under Construction	New Line U/C	AP59-AP60
16	Double circuit	220 kV	Sugen-Puna	AP61-AP62
17	Double circuit	400 kV	Kosamba - VAV	AP63-AP64
18	Double circuit	220 kV	Sugen-Bhatar	AP65-AP66
19	Single circuit	400 kV	Vapi To Gandhar Kawas	AP69-AP70
20	Double circuit	400 kV	Power Grid GND-NAV- T.N 250-T.N 251	AP74-AP75
21	Double circuit	220 kV	Power Grid (KAP-VAV)	AP80-AP81
22	Double circuit	220 kV	220 kV D/C	AP81-AP82
23	Double circuit	400 kV	Power Grid KPP-Nav- T.N 0078 - T.N 0079	AP91-AP92
24	Double circuit	765 kV	U/C South Olpad (GIS) – Boisar-Ii (GIS)	AP105-AP106
25	Double circuit	800 kV	Under Bidding HVDC Barmer-Kalam	AP112-AP113
26	Double circuit	220 kV	KAP-VAPI Power Grid	AP130-AP131
27	Double circuit	400 kV	400KV D/C LINE	AP172-AP173
28	Double circuit	800 kV	Proposed HVDC Barmer II-Kalam	AP220-AP221
29	Double circuit	132 kV	132 kV D/c line	AP258-AP259

South Olpad (GIS) - Nasik 765 kV D/c Line				
Sr No.	Circuit Details	Voltage rating in kV / Crossing	Name of Owner (SEB/DOT)	Crossing in between Angle Point
30	Double circuit	220 kV	220 kV D/c line	AP343-AP344
31	Single circuit	132 kV	132 kV S/c Line	AP383-AP384
32	Double circuit	220 kV	220 kV D/c Line	AP393-AP394
33	Double circuit	400 kV	AWBD_Boisar (PG)_ DCQ	AP409-AP410
34	Double circuit	132 kV	Manmad Nashik DCDC	AP418-AP419

National Highway/State Highway Crossings

South Olpad (GIS) - Nasik 765 kV D/c Line				
Sl. No.	Name of the Road	National Highway / State Highway	Nearest City/Town from Crossing	(Crossing Between Loc. No.)
1	Velanja-Pardi	SH-605	Kamrej Abrama	AP35-AP36
2	Ahmedabad-Mumbai HWY	NH-48	Choryasi	AP46-AP47
3	Vadodara-Mumbai Expy	NH-NE4	Digyas	AP65-AP66
4	Orna-Sampura	SH-167	Delad	AP72-AP73
5	Bardoli-Kadod	SH-165	Kharvasa, Bardoli	AP89-AP90
6	Bardoli-Kadod	SH-88	Bardoli	AP94-AP95
7	Songadh-Surat	NH-53	Bardoli	AP102-AP103
8	Kadodra-Antapur	SH-187	Bamroli	AP107-AP108
9	Mahuva - Anawal	SH-165	Mahuva	AP148-AP149
10	Anaval-Vansda	SH-165	Palgabhan	AP180-AP181
11	Chikhi-Vansda	SH-15	Moti Valzar	AP189-AP190
12	Bhomapardi-Kanjan	NH-56	Umarkui	AP215-AP216
13	Kosimpada-Ambatha	SH 22	Nimbarpada	AP272-AP273
14	Palsane Barthare	SH 21	Mahismal	AP303-AP304
15	Saputara-Nashik	SH-17	Ozar Khed	AP352-AP353
16	Pimpalgaon Baswant-Vani	NH-953	Dindori	AP359-AP360
17	Pimpalgaon Baswant-Chandvad	NH-60	Shirwade Wani	AP397-AP398
18	AURANGABAD-NASHIK	SH-30	Niphad	AP441-AP442
19	Devpur-Panchale	SH-35	Devpur	AP477-AP478

Railway Line Crossings

South Olpad (GIS) - Nasik 765 kV D/c Line						
SL. No.	**Name of the Railway Line**	**Type of Gauge Broad / Metre / Narrow**	**Single/Double Line**	**Electrified / Non- Electrified**	**Remarks (Crossing in Between Locs.)**	**Pol.No**
1	Sayan-Kim	Broad	Railway Double Track Electrified	Electrified	AP24-AP25	Pol-No.284/27,284/28A
2	Ahmedabad To Mumbai	Broad	Bullet Train	Electrified	AP26-AP27	
3	Bardoli- Timberva	Broad	Railway Double Track	Electrified	AP96-AP97	Pol No-29/22,29/23
4	Dholikua-Unai	Broad	Single Railway Track Non Electrified	Electrified	AP168-AP169	
5	Navsari-Gangpur	Broad	Up Coming Railway	Electrified	AP215-AP216	
6	Wagai-Nashik	Broad	Upcoming Railway	Electrified	AP331-AP332	
7	Bilmora-Manmad	Broad	Upcoming Railway	Electrified	AP337-AP338	
8	Niphad-Ugaon	Broad	Railway Double Track Electrified	Electrified	AP429-AP430	-Pol.No-223/7,223/8

River Crossing

South Olpad (GIS) - Nasik 765 kV D/c Line								
SL. No.	Name of River	Approximate Span in Meters (bank to bank width)	Perennial / Weathered Flow	HFL Information	Navigable / Non - Navigable	Remarks (Crossing in Between Loc. No.)	Pile Foundation required	Mid-span Piles required
1	Tapi River	500	Perennial	Nil	Navigable	AP51-AP52	Not Required	Nil
2	Mindhola River	62	Perennial	Nil	Non - Navigable	AP100-AP101	Not Required	Nil
3	Purna River	200	Perennial	Nil	Non - Navigable	AP114-AP115	Not Required	Nil
4	Olan Khadi River	50	Perennial	Nil	Non - Navigable	AP136-AP137	Not Required	Nil
5	Ambika River	170	Perennial	Nil	Non - Navigable	AP140-AP141	Not Required	Nil
6	Kaveri River	35	Perennial	Nil	Non - Navigable	AP182-AP183	Not Required	Nil
7	Kaveri River	43	Perennial	Nil	Non - Navigable	AP187-AP188	Not Required	Nil
8	Kaveri River	40	Perennial	Nil	Non - Navigable	AP201-AP202	Not Required	Nil
9	Kaveri River	75	Perennial	Nil	Non - Navigable	AP206-AP207	Not Required	Nil
10	Sasu River	50	Weathered Flow	Nil	Non - Navigable	AP256-AP257	Not Required	Nil
11	Man River	64	Weathered Flow	Nil	Non - Navigable	AP275-AP276	Not Required	Nil
12	Par River	100	Weathered Flow	Nil	Non - Navigable	AP289-AP290	Not Required	Nil
13	Par River	130	Weathered Flow	Nil	Non - Navigable	AP317-AP318	Not Required	Nil
14	Kadya River	25	Weathered Flow	Nil	Non - Navigable	AP333-AP334	Not Required	Nil
15	Dev River	50	Weathered Flow	Nil	Non - Navigable	AP348-AP349	Not Required	Nil
16	Vaintha River	60	Weathered Flow	Nil	Non - Navigable	AP428-AP429	Not Required	Nil
17	Godavari River	320	Perennial	Nil	Navigable	AP463-AP464	Not Required	Nil
18	Dev River	45	Weathered Flow	Nil	Navigable	AP474-AP475	Not Required	Nil

Forest Crossing

South Olpad (GIS) - Nasik 765 kV D/c Line				
Sl. No	**Section AP to AP**	**Name of the Forest**	**Type of Forest (Reserved/Protected/Social/Revenue**	**Forest Stretches (m)**
1	AP155-AP156	Reserved Forest	Reserved	260
2	AP156-AP157	Reserved Forest	Reserved	85
3	AP218-AP223	Reserved Forest	Reserved	1416
4	AP229-AP232	Reserved Forest	Reserved	720
5	AP235-AP242	Reserved Forest	Reserved	2688
6	AP246-AP269	Reserved Forest	Reserved	9515
7	AP270-AP272	Reserved Forest	Reserved	506
8	AP276-AP278	Reserved Forest	Reserved	457
9	AP279-AP280	Reserved Forest	Reserved	692
10	AP281-AP284	Reserved Forest	Reserved	550
11	AP287-AP291	Reserved Forest	Reserved	1619
12	AP293-AP296	Reserved Forest	Reserved	1108
13	AP297-AP298	Reserved Forest	Reserved	625
14	AP298-AP299	Reserved Forest	Reserved	197
15	AP299-AP302	Reserved Forest	Reserved	1600
16	AP304-AP306	Reserved Forest	Reserved	465
17	AP307-AP309	Reserved Forest	Reserved	540
18	AP313-AP316	Reserved Forest	Reserved	1148
19	AP318-AP324	Reserved Forest	Reserved	4334
20	AP341-AP348	Reserved Forest	Reserved	6234
21	AP349-AP356	Reserved Forest	Reserved	6055
Total Forest Stretches				**40814**

Wildlife/Elephant Corridor/Bird Sanctuary/GIB Crossing

South Olpad (GIS) - Nasik 765 kV D/c Line				
Sl. No.	**Section AP to AP**	**Name of the Wildlife**	**Type of Wildlife (Reserved/Protected/Social/Revenue**	**Wildlife Stretches(m)**
Nil				

3.5: Wind Zone Map

Wind Zone

The Proposed transmission line namely "South Olpad (GIS)-Nasik 765 kV D/c line from South Olpad Gantry – AP 247 is passing through Wind Zone-III, from AP 247 – AP 270 is passing through Wind Zone-1, from AP 270 – AP 273 is passing through Wind Zone-3 and from AP 273 – Nasik Gantry is passing through Wind Zone – II.

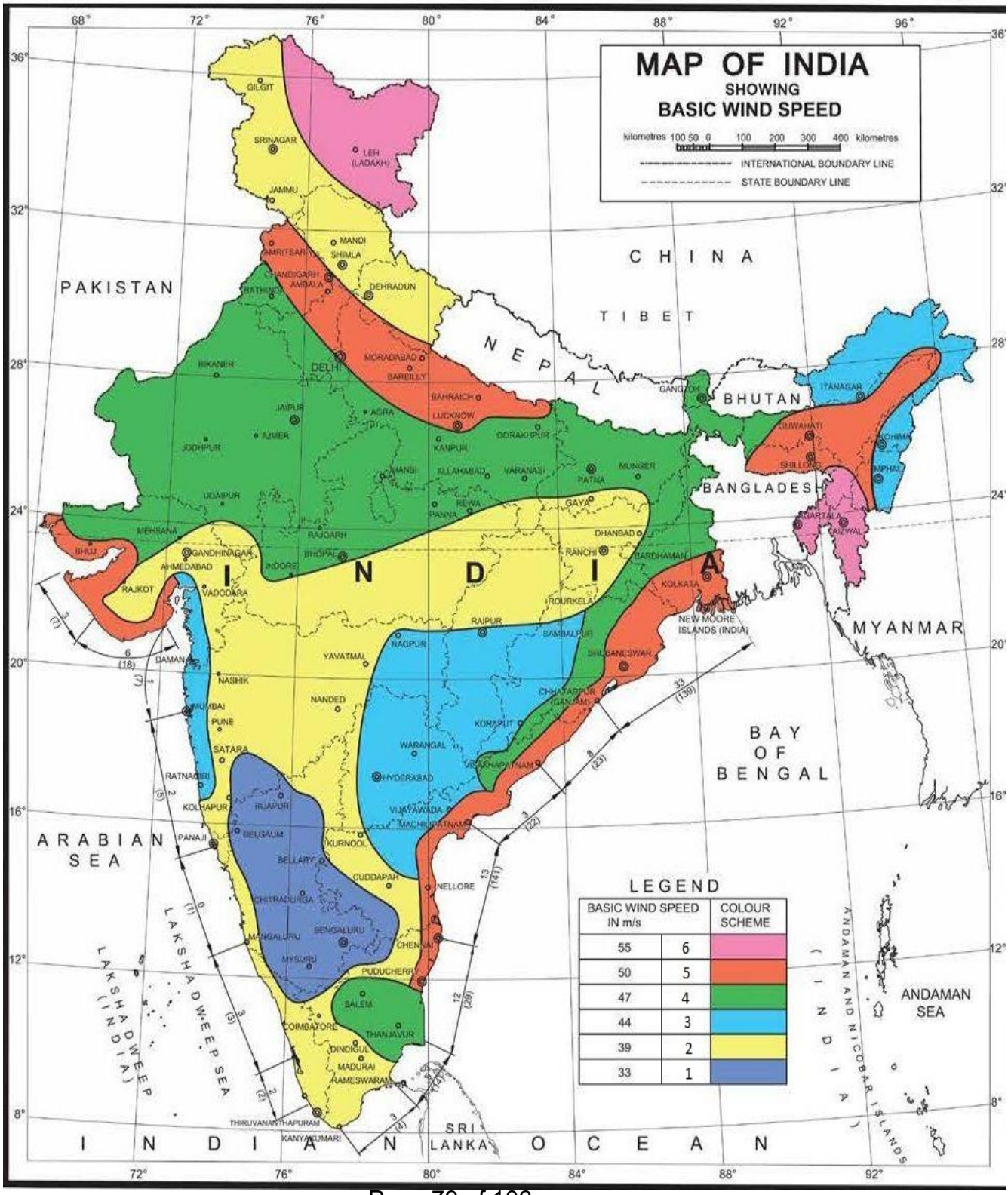

3.6 : Results & Conclusion

Results & Conclusion

Referring to angle point summary and after initial inspection of physical maps updated with satellite images and walk over survey, the proposed route corridors was explored for the best route alignment. Special attention has been given to the existing EHV lines, forest, reserved forest, river crossings, national/state highways, minimum route length and habitation including plantation. After detailed analysis, the proposed transmission line route has been observed as most viable route for alignment due to its good approach, for construction and maintenance of the transmission line after construction. Finally, the Route marked Red in the route alignment drawing as has been proposed final route

3.7 : Route Alignment Map on Digital Toposheets

Section: 4

4.0: Nasik – Pimpalgaon (MSETCL) 400kV D/c line (Quad ACSR/AAAC/AL59 moose equivalent)

Snapshot of KMZ file for the proposed Nasik – Pimpalgaon (MSETCL) 400kV D/c line

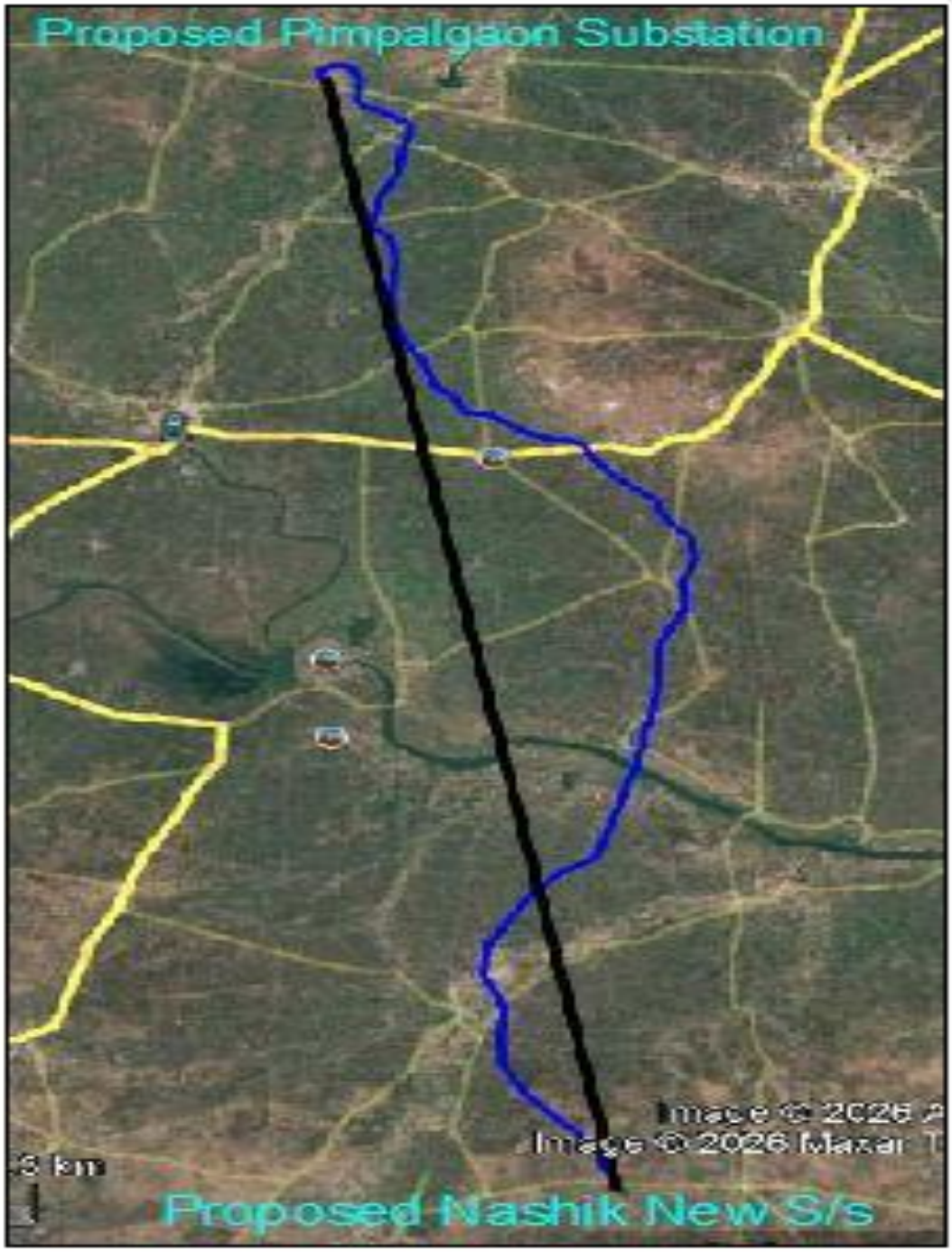

4.1 : Coordinates of both ends

Coordinate of the both end substation

Nasik – Pimpalgaon (MSETCL) 400kV D/c line

Details of Substation	Latitude	Longitude
Under Construction 400/220 kV Pimpalgaon (MSETCL) Village: Sarole Kh. Taluka: Niphad District: Nashik State: Maharashtra	20°10'13.07" N	74°8'11.68" E
Proposed 765/400 kV Nashik Substation Village: Panchale Taluka: Sinner District: Nashik State: Maharashtra	19°52'24.35" N	74°11'34.98" E

Note: The exact coordinates for construction of 400 kV line bays at 400/220 kV Pimpalgaon (MSETCL) substation for termination of Nasik - Pimpalgaon (MSETCL) 400kV D/c line are to be obtained from the owner of 400/220 kV Pimpalgaon substation during execution stage.

4.2 : Index Map of SOI Toposheets

Survey of India Toposheets Index Map (1:50000 scale)

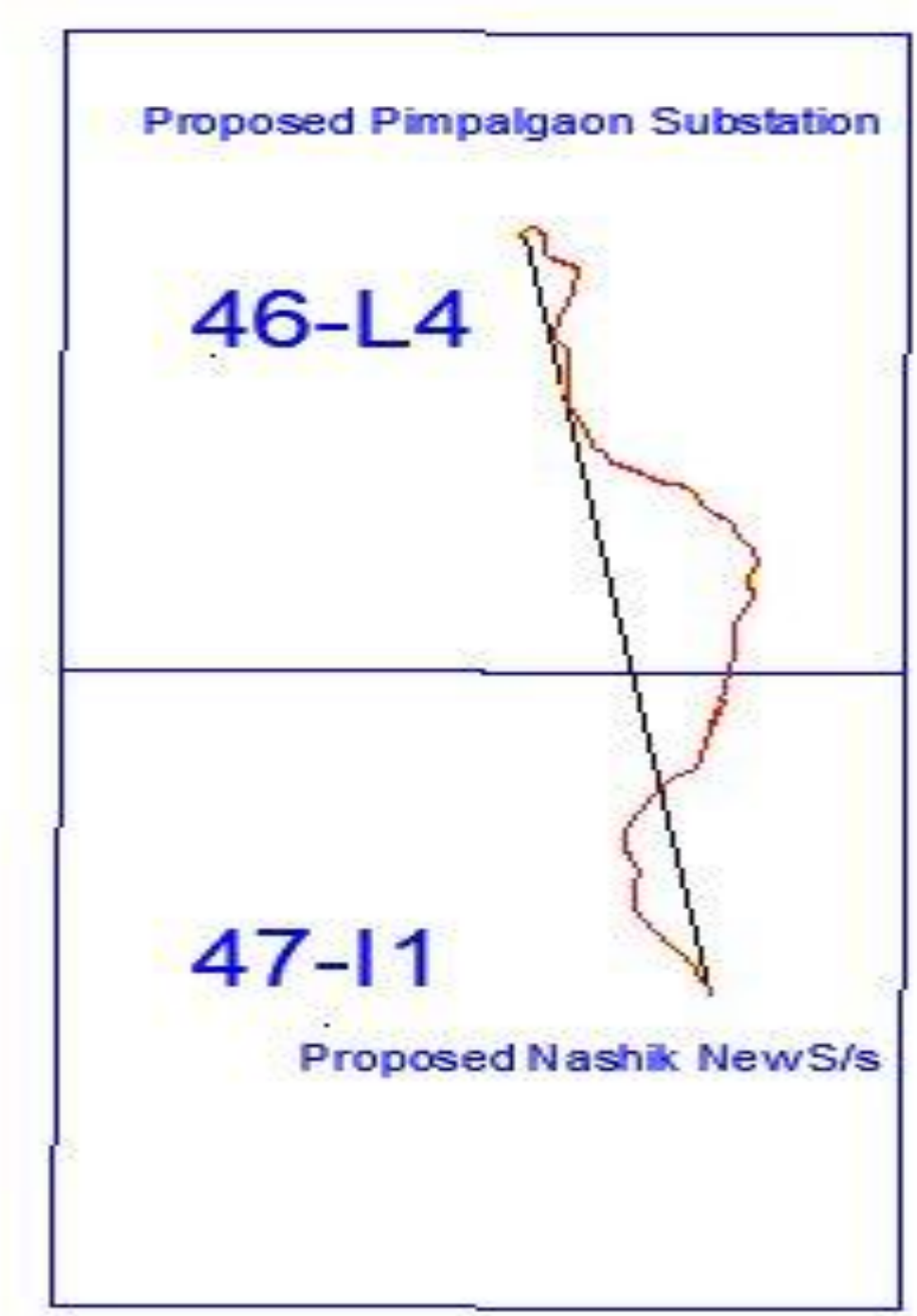

4.3 : Angle Schedule of Nasik - Pimpalgaon (MSETCL) 400 kV D/c line

Nasik – Pimpalgaon (MSETCL) 400kV D/c line									
AP No.	**Easting**	**Northing**	**Latitude**	**Longitude**	**Span (Mtr.)**	**Cumulative Length (Mtr.)**	**Angle of Deviation**	**Crossing Detail**	**Altitude (M)**
Gantry	409776.513	2230561.027	20°10'13.07" N	74°8'11.68" E				U/c Pimpalgaon (MSETCL) S/s	625
					91.56				
AP1	409686.527	2230544.137	20°10'12.51" N	74°8'8.59" E		91.56	62°26'3.7"L		624.4
					79.38				
AP2	409637.444	2230606.519	20°10'14.53" N	74°8'6.88" E		170.94	40°24'36"R		624.6
					110.62				
AP3	409641.717	2230717.052	20°10'18.12" N	74°8'7.01" E		281.56	46°13'0.4"R		620.9
					255.05				
AP4	409832.534	2230886.285	20°10'23.66" N	74°8'13.55" E		536.61	31°35'45"R		619.6
					244.04				
AP5	410072.885	2230928.551	20°10'25.08" N	74°8'21.83" E		780.65	29°23'22.9"R		616.6
					214.9				
AP6	410275.559	2230857.114	20°10'22.79" N	74°8'28.82" E		995.55	41°1'16.8"R		613
					354.23				
AP7	410450.325	2230549.001	20°10'12.79" N	74°8'34.9" E		1349.78	31°44'31.8"R		612.8
					720.88				
AP8	410422.908	2229828.647	20°9'49.36" N	74°8'34.08" E		2070.66	46°15'4.1"L		607.9
					188.68			Vadali River	
AP9	410554.146	2229693.085	20°9'44.97" N	74°8'38.63" E		2259.34	24°8'0.6"L		607.6
					329.42				
AP10	410860.02	2229570.775	20°9'41.04" N	74°8'49.18" E		2588.76	13°19'24.7"R		608.8
					661.32				
AP11	411400.959	2229190.335	20°9'28.76" N	74°9'7.88" E		3250.08	49°58'30.8"R		610.8
					204.99			132 kV D/c line (Manmad	

Nasik – Pimpalgaon (MSETCL) 400kV D/c line									
AP No.	**Easting**	**Northing**	**Latitude**	**Longitude**	**Span (Mtr.)**	**Cumulative Length (Mtr.)**	**Angle of Deviation**	**Crossing Detail**	**Altitude (M)**
								Nashik, T No. 125 T No. 126)	
AP12	411418.491	2228986.094	20°9'22.12" N	74°9'8.52" E		3455.07	16°19'30.6"R		610
					448.18				
AP13	411329.759	2228546.782	20°9'7.81" N	74°9'5.54" E		3903.25	5°58'39.1"R		606.5
					206.11			400 kV D/c line (AWBD Boisar (PG) DCQ ,T No. 449 T No.450)	
AP14	411268.135	2228350.097	20°9'1.4" N	74°9'3.46" E		4109.36	9°13'29.3"L		609.3
					693.83			Canal	
AP15	411169.515	2227663.315	20°8'39.05" N	74°9'0.18" E		4803.19	18°52'30.3"R		603.2
					733.73				
AP16	410835.877	2227009.832	20°8'17.74" N	74°8'48.8" E		5536.92	16°26'30.4"L		598.9
					855.58				
AP17	410678.42	2226168.87	20°7'50.35" N	74°8'43.53" E		6392.5	58°48'35.4"L		592
					406.7				
AP18	410981.625	2225897.82	20°7'41.59" N	74°8'54.02" E		6799.2	20°37'1.8"R		592.6
					241.34			Railway Double Track Electrified -Pol.No-226/17-226/18	
AP19	411093.393	2225683.916	20°7'34.65" N	74°8'57.91" E		7040.54	20°16'7.8"R		591.8
					474.71				
AP20	411153.867	2225213.074	20°7'19.34" N	74°9'0.07" E		7515.25	10°44'17.5"R		593.3

Nasik – Pimpalgaon (MSETCL) 400kV D/c line									
AP No.	Easting	Northing	Latitude	Longitude	Span (Mtr.)	Cumulative Length (Mtr.)	Angle of Deviation	Crossing Detail	Altitude (M)
					1054.06				
AP21	411091	2224160.888	20°6'45.11" N	74°8'58.09" E		8569.31	6°4'14.4"L		593.2
					838.57				
AP22	411129.791	2223323.216	20°6'17.87" N	74°8'59.57" E		9407.88	14°8'55.2"L		585.6
					486.64				
AP23	411270.446	2222857.345	20°6'2.74" N	74°9'4.5" E		9894.52	15°7'59"L		582.3
					782.32				
AP24	411684.237	2222193.417	20°5'41.21" N	74°9'18.86" E		10676.84	14°23'23.9"R		583.5
					809.24				
AP25	411928.16	2221421.817	20°5'16.15" N	74°9'27.4" E		11486.08	35°45'14"L		581.8
					441.72				
AP26	412282.303	2221157.818	20°5'7.62" N	74°9'39.64" E		11927.8	27°47'46.1"R		582.4
					538.36				
AP27	412514.08	2220671.906	20°4'51.85" N	74°9'47.7" E		12466.16	56°58'8.3"L		581.4
					482.75				
AP28	412992.662	2220608.643	20°4'49.87" N	74°10'4.19" E		12948.91	30°4'16.7"R		584.2
					826.99				
AP29	413647.866	2220104.041	20°4'33.56" N	74°10'26.83" E		13775.9	15°31'52.9"L		591
					685.79				
AP30	414283.406	2219846.361	20°4'25.28" N	74°10'48.76" E		14461.69	21°47'21.7"L		595
					312.65				
AP31	414596.054	2219844.829	20°4'25.28" N	74°10'59.52" E		14774.34	22°59'13.8"R		596.2
					274.88				
AP32	414848.577	2219736.243	20°4'21.79" N	74°11'8.23" E		15049.22	51°58'8.4"R		601.6
					232.59			S.H-30 Aurangabad-	

Nasik – Pimpalgaon (MSETCL) 400kV D/c line									
AP No.	Easting	Northing	Latitude	Longitude	Span (Mtr.)	Cumulative Length (Mtr.)	Angle of Deviation	Crossing Detail	Altitude (M)
								Nashik Hwy	
AP33	414907.845	2219511.336	20°4'14.49" N	74°11'10.31" E		15281.81	20°29'31.3"L		598.3
					811.96				
AP34	415376.522	2218848.299	20°3'52.99" N	74°11'26.56" E		16093.77	12°29'30.3"L		592
					1201.3				
AP35	416265.701	2218040.537	20°3'26.86" N	74°11'57.3" E		17295.07	27°5'55.9"R		591.2
					620.85				
AP36	416484.628	2217459.57	20°3'7.99" N	74°12'4.93" E		17915.92	20°20'47.2"L		583.1
					385.09				
AP37	416737.243	2217168.913	20°2'58.58" N	74°12'13.68" E		18301.01	3°40'33.2"L		581.1
					241.5			BPCL Gas Pipe Line	
AP38	416907.027	2216997.164	20°2'53.02" N	74°12'19.55" E		18542.51	32°40'4.9"R		577.5
					644.44				
AP39	417041.04	2216366.808	20°2'32.53" N	74°12'24.26" E		19186.95	31°26'32.8"R		576.1
					740.88				
AP40	416794.459	2215668.165	20°2'9.77" N	74°12'15.89" E		19927.83	22°40'10.3"L		570
					770.69				
AP41	416837.875	2214898.699	20°1'44.74" N	74°12'17.51" E		20698.52	27°59'49.5"R		567.1
					1209.93				
AP42	416330.986	2213800.063	20°1'8.93" N	74°12'0.25" E		21908.45	22°32'3.3"L		558
					1157.82				
AP43	416285.865	2212643.125	20°0'31.29" N	74°11'58.88" E		23066.27	4°43'41.4"R		552.7
					1059.8			Canal & Nala	
AP44	416157.413	2211591.136	19°59'57.05" N	74°11'54.64" E		24126.07	15°17'21.3"R		550.7
					408.15				

Nasik – Pimpalgaon (MSETCL) 400kV D/c line									
AP No.	Easting	Northing	Latitude	Longitude	Span (Mtr.)	Cumulative Length (Mtr.)	Angle of Deviation	Crossing Detail	Altitude (M)
AP45	416002.863	2211213.381	19°59'44.74" N	74°11'49.38" E		24534.22	24°6'7.7"L		547.7
					423.05				
AP46	416016.53	2210790.553	19°59'30.98" N	74°11'49.92" E		24957.27	26°52'41.1"R		548.1
					297.35				
AP47	415890.738	2210521.12	19°59'22.2" N	74°11'45.64" E		25254.62	35°54'15.1"L		538.2
					238.01				
AP48	415935.652	2210287.389	19°59'14.6" N	74°11'47.22" E		25492.63	36°9'42.1"R		536.7
					373.69			Godavari River	
AP49	415776.047	2209949.502	19°59'3.59" N	74°11'41.78" E		25866.32	11°42'39.3"L		535.8
					918.85				
AP50	415560.403	2209056.319	19°58'34.5" N	74°11'34.51" E		26785.17	3°8'7.4"R		549.3
					1634.21				
AP51	415090.557	2207491.108	19°57'43.51" N	74°11'18.61" E		28419.38	41°36'12.5"R		554.1
					811.08			Canal	
AP52	414400.394	2207065.058	19°57'29.54" N	74°10'54.93" E		29230.46	17°28'53.4"L		560.4
					965.16				
AP53	413769.347	2206334.775	19°57'5.69" N	74°10'33.35" E		30195.62	12°15'22.5"L		561.7
					1706.78				
AP54	412952.993	2204835.888	19°56'16.8" N	74°10'5.52" E		31902.4	24°9'5.8"L		570
					855.49				
AP55	412887.02	2203982.942	19°55'49.04" N	74°10'3.4" E		32757.89	35°2'7.5"L		564
					291.47				
AP56	413035.447	2203732.091	19°55'40.91" N	74°10'8.54" E		33049.36	11°10'2.6"R		561.6
					880.6				
AP57	413328.602	2202901.721	19°55'13.94" N	74°10'18.77" E		33929.96	30°58'34.2"R		566
					504.38				

Nasik – Pimpalgaon (MSETCL) 400kV D/c line									
AP No.	**Easting**	**Northing**	**Latitude**	**Longitude**	**Span (Mtr.)**	**Cumulative Length (Mtr.)**	**Angle of Deviation**	**Crossing Detail**	**Altitude (M)**
AP58	413227.777	2202407.52	19°54'57.85" N	74°10'15.38" E		34434.34	12°55'56.3"L		575.9
					997.56				
AP59	413252.172	2201410.258	19°54'25.42" N	74°10'16.39" E		35431.9	26°56'57.4"L		578.2
					1135.83				
AP60	413791.539	2200410.659	19°53'52.99" N	74°10'35.11" E		36567.73	13°3'15.8"L		587.9
					2098.53				
AP61	415179.455	2198836.651	19°53'2" N	74°11'23.1" E		38666.26	33°40'43.4"R		578
					556.55				
AP62	415254.277	2198285.156	19°52'44.08" N	74°11'25.76" E		39222.81	32°27'50.3"L		582.9
					418.91				
AP63	415524.609	2197965.15	19°52'33.71" N	74°11'35.11" E		39641.72	36°47'2.7"R		585.4
					195.43			SH-35 Devpur Rd	
AP64	415536.22	2197770.065	19°52'27.36" N	74°11'35.54" E		39837.15	13°42'12.5"R		583.8
					94.17				
Gantry	415519.387	2197677.415	19°52'24.35" N	74°11'34.98" E		39931.32		Proposed 765/400 kV Nasik S/s	584

4.4: Summary of the proposed route

Nasik- Pimpalgaon (MSETCL) 400 kV D/c line		
Sl. No.	**Description**	**Proposed Route**
1	Bee line length	33.391 KM
	Line Length	39.931 KM
2	Terrain	Plain with Constraints
	a) Plain	95%
	b) Undulated terrain	05%
3	Snow bound Route (in Meters)	Nil
4	Length of line in heavy rainfall area which may affect working season (in Meters)	Nil
5	Angle Points	64 Nos.
6	Forest	No
	a) Reserve Forest	Nil
	b) Protected Forest	Nil
	c) Open Scrub	Along the Route
7	Wildlife infringement	Nil
8	Animal/Bird Sanctuary	Nil
9	infringement of endangered species habitat	Nil
10	National Park	Nil
11	Great Indian Bustard (GIB) area (Priority/ Potential Zone)	Nil
12	Creek, Marshy and low-laying area	Nil
13	No. of Pile/Special Foundation required	Nil
14	Transportation & Maintenance	Available
15	Power Line crossings (132 kV & above)	2 Nos.
16	Telecom Line Crossing	Nil
17	Railway crossings	1 No.
18	Airport/Air strip	Shirdi International Airport
19	Upcoming Airport/Aviation zone/Airforce Station	Nil
20	Army cantonment/Mining/No go areas/Airstrips	Nil
21	River crossings	2 Nos.
	a) Major	
	b) Minor	2 Nos.
22	NH Crossings	Nil
23	SH Crossings	2 Nos.
24	Existing Gas/Petroleum/Oil Pipeline	AP 37-38 (BPCL Gas Pipe Line)
25	Proposed Gas/Petroleum/Oil Pipeline	Nil

Nasik- Pimpalgaon (MSETCL) 400 kV D/c line		
Sl. No.	**Description**	**Proposed Route**
26	Land Availability (if required for Acquisition)	Available
	i) Extent of land available	Available
	ii) Land use pattern (agricultural, barren, forest etc.)	Mostly Agricultural
	iii) Land ownership (Govt. Private, trible, non-tribal etc)	Mostly Private Land
27	Approaches for construction	Available
28	Wind Zone	2
29	State	Maharashtra
30	District	Nashik

Power Line Crossing (110 kV& above)

Nasik- Pimpalgaon (MSETCL) 400 kV D/c line				
Sl. No.	**Circuit Details**	**Voltage rating in kV / Crossing**	**Name of Owner (SEB/DOT)**	**Crossing in between Angle Point**
1	Double circuit	132 KV	Manmad Nashik	AP11-AP12
2	Double circuit	400 KV	AWBD Boisar (PG) DCQ	AP13-AP14

National Highway/State Highway Crossings

Nasik- Pimpalgaon (MSETCL) 400 kV D/c line				
SL. No.	**Name of the Road**	**Type Of Road National Highway / State Highway**	**Nearest City/Town from Crossing**	**Remarks (Crossing Between Loc. No.)**
1	Aurangabad-Nashik Hwy	S.H-30	Niphad	AP32-AP33
2	Devpur -Sahaha	S.H-35	Sinner	AP 63-AP64

Railway Line Crossings

Sl. No.	Name of the Railway Line	Type of Gauge Broad / Metre / Narrow	Single/ Double Line	Electrified / Non-Electrified	Remarks (Crossing in Between Locs.)	Pol. No
1	Ugaon - Lasalgaon	Broad	Double	Electrified	AP18-AP19	Pol.No-226/17-226/18

River Crossing

SL. No.	Name of River	Approximate Span in Meters (bank to bank width)	Perennial / Weathered Flow	HFL Information	Navigable / Non - Navigable	Remarks (Crossing in Between Loc. No.)	Pile Foundation required	Mid-span Piles required
1	Vadali River	90	Weathered Flow	N/A	Non - Navigable	AP8-AP9	Not Required	Nil
2	Godavari River	205	Perennial	N/A	Navigable	AP48-AP49	Not Required	Nil

Forest Crossing

SL. No.	Section AP to AP	Name of the Forest	Type of Forest (Reserved/Protected/Social/ Revenue	Forest Stretches (m)	Forest Stretches (Sqm)
1	Nil				

Wildlife/Elephant Corridor/Bird Sanctuary/GIB Crossing

SL. No.	Section AP to AP	Name of the Wildlife	Type of Wildlife (Reserved/Protected/Social/Revenue	Wildlife Stretches(m)
1	Nil			

4.5: Wind Zone Map

Wind Zone: The Proposed transmission line namely “Nasik - Pimpalgaon (MSETCL) 400kV D/c line” is passing through Wind Zone-II.

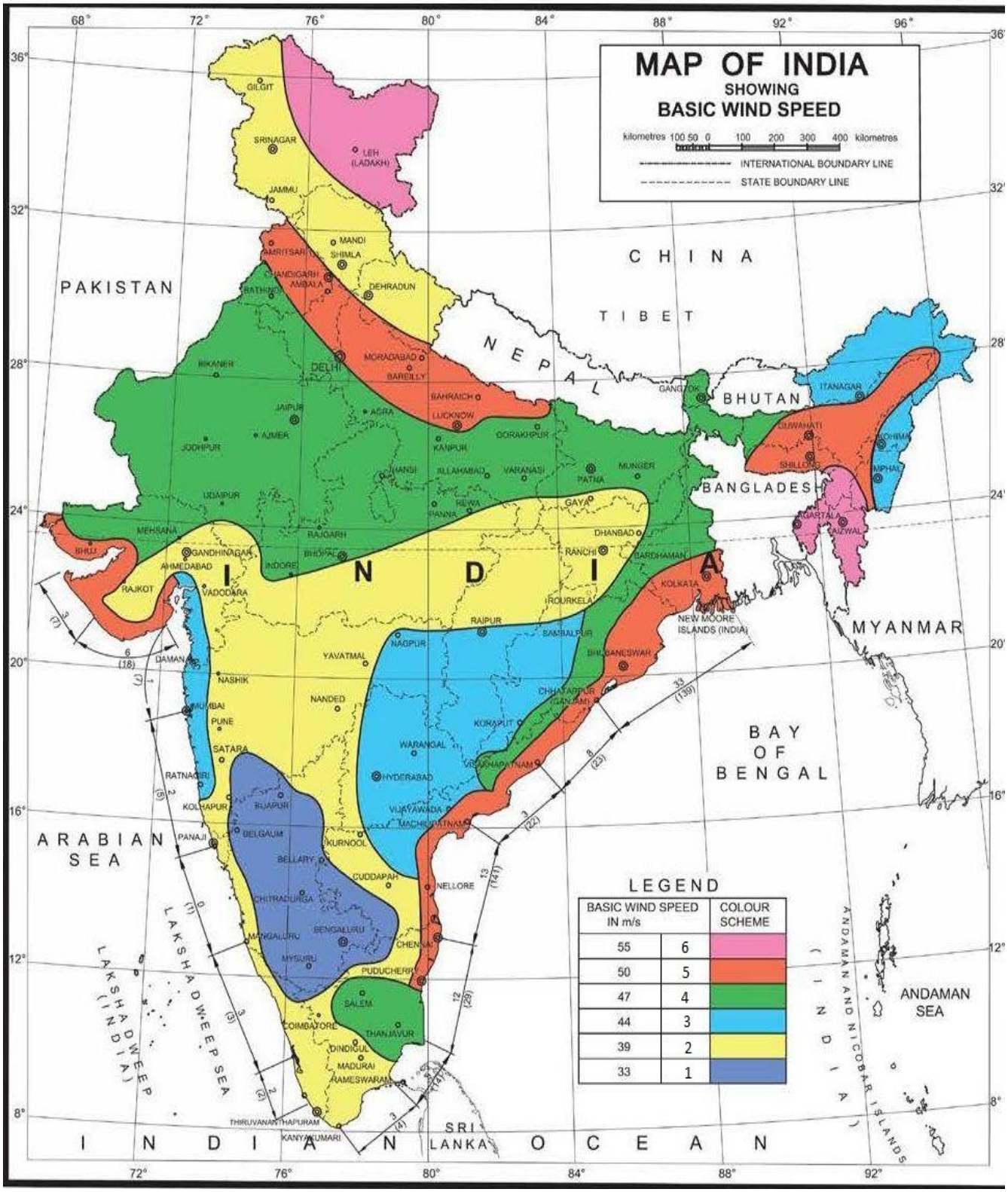

4.6 : Results & Conclusion

Results & Conclusion

Referring to angle point summary and after initial inspection of physical maps updated with satellite images and walk over survey, the proposed route corridors was explored for the best route alignment. Special attention has been given to the existing EHV lines, forest, reserved forest, river crossings, national/state highways, minimum route length and habitation including plantation. After detailed analysis, the proposed transmission line route has been observed as most viable route for alignment due to its good approach, for construction and maintenance of the transmission line after construction. Finally, the Route marked Red in the route alignment drawing as has been proposed final route

.

4.7 : Route Alignment Map on Digital Toposheets

ANNEXURE P-12

Date: 31.08.2026

CERTIFICATE BY BID EVALUATION COMMITTEE

Subject: Selection of Successful Bidder as Transmission Service Provider through Tariff Based Competitive Bidding Process to establish "Common Transmission System for evacuation of power from Lakadia (Phase-II: 7.5GW), Jam Khambhaliya (Phase-II: 5.5GW) and Jamnagar (Phase-I: 1GW) - Part-B"

It is certified that:

a. The entire bid process has been carried out in accordance with the "Tariff based Competitive Bidding Guidelines for Transmission Service" and "Guidelines for encouraging competition in development of the Transmission Projects" issued by Ministry of Power, Govt. of India under Section 63 of the Electricity Act, 2003 as amended from time to time.

b. M/s Ceigall India Limited, with the lowest annual transmission charges of Rs. 6,086.70 million, emerged as the successful bidder after the conclusion of electronic reverse auction.

c. The transmission charges of Rs. 6,086.70 million discovered after electronic reverse auction is acceptable.

(Amit Jog)
General Manager,
CCGRO-II, SBI
Chairman, BEC

(Ganeswara Rao Jada)
Director (PSPA-I), CEA
Member, BEC

(Kavita Jha)
Director (PSETD), CEA
Member, BEC

(A. B. Rathod)
CE (SLDC),
GETCO
Member, BEC

(Rajan Joshi)
SE (STU),
MSETCL
Member, BEC

(Rajkumar Sonkar)
Chairman –SPV
Convener – Member,
BEC

REC Power Development and Consultancy Limited
(A wholly owned subsidiary of REC Limited, a 'Maharatna CPSE' under Ministry of Power, Govt. of India)

REC Power Development

Ref No.: RECPDCL/TBCB/ Jam Khambhaliya/2026-27/2648 Date: 02.09.2026

ORIGINAL

M/s Ceigall India Limited
Plot No. 452, Udyog Vihar, Phase-V,
GPO - Gurugram, Behind Enkay Tower
Gurgaon-122016

Kind Attention: Shri Chandan Singh

Subject: Establishment of "Common Transmission System for evacuation of power from Lakadia (Phase-II: 7.5GW), Jam Khambhaliya (Phase-II: 5.5GW) and Jamnagar (Phase-I: 1GW) - Part-B" through Tariff Based Competitive Bidding Process (TBCB) – **Letter of Intent**

Sir,

We refer to:

1. The Request for Proposal (RfP) dated 04.05.2026 comprising RfP, Draft Transmission Service Agreement, Share Purchase Agreement and Survey Report dated 20.07.2026 issued to M/s Ceigall India Limited, as regards participation in the Global Invitation for Bids for establishment of "Common Transmission System for evacuation of power from Lakadia (Phase-II: 7.5GW), Jam Khambhaliya (Phase-II: 5.5GW) and Jamnagar (Phase-I: 1GW) - Part-B" through Tariff Based Competitive Bidding process including all correspondence/clarifications /amendments/errata/corrigendum issued by REC Power Development and Consultancy Limited in regard thereto (hereinafter collectively referred to as the 'Final RFP') till the submission Bid Deadline and as listed below:

   (i) Amendment-I dated 14.05.2026,
   (ii) Amendment-II dated 02.06.2026,
   (iii) Amendment-III dated 22.06.2026,
   (iv) Clarification dated 01.07.2026,
   (v) Amendment-IV dated 06.07.2026,
   (vi) Amendment-V & Additional Clarification dated 08.07.2026,
   (vii) Additional Clarification dated 10.07.2026,
   (viii) Additional Clarification dated 11.07.2026,
   (ix) Amendment-VI dated 13.07.2026,
   (x) Amendment-VII dated 20.07.2026,
   (xi) Amendment-VIII dated 28.07.2026,

2. The offer of M/s Ceigall India Limited by way of a Technical Bid pursuant to (1) above submitted on 05.08.2026 in response to the Final RFP.

3. The Initial Price Offer of M/s Ceigall India Limited as submitted on 05.08.2026 in response to the Final RFP.

4. The final offer of M/s Ceigall India Limited, discovered during e-Reverse Auction, concluded on 25.08.2026 in response to the Final RFP.

5. The Technical Bid as in (2) above, the Initial Price Offer as in (3) above and the Final Offer as in (4) above hereinafter collectively referred to as the 'Bid'.

We are pleased to inform you that your proposal and offer received by way of the 'Bid' has been accepted and M/s Ceigall India Limited is here by declared as Successful Bidder as per clause 3.6.1 of the Final RFP for the above project and consequently, this Letter of Intent (hereinafter referred to as the 'LoI') is being issued in 2 copies, One original plus One copy.

REC Power Development and Consultancy Limited Gurugram

This LoI is based on the Final RFP and is further contingent upon you satisfying the following conditions:

(a) Acknowledging its issuance and unconditionally accepting its contents and recording 'Accepted unconditionally' under the signature and stamp of your authorized signatory on each page of the duplicate copy of this letter attached herewith and returning the same to REC Power Development and Consultancy Limited within 7 (Seven) days from the date of issuance of LoI.

(b) Completion of various activities as stipulated in the RFP including in particular Clause 2.15.2, Clause 2.15.3 and Clause 2.15.4 of the Final RFP within the timelines as prescribed therein.

(c) Provide the Contract Performance Guarantee of Rs. 90.00 Crore (Rupees Ninety Crore Only) within 10 (Ten) days from issue of this LoI, in favour of the Central Transmission Utility of India Limited, as per the provisions of Clause 2.12.

It may be noted that REC Power Development and Consultancy Limited has the rights available to them under the Final RFP, including rights under clause 2.15.5 and 3.6.3 thereof, upon your failure to comply with the aforementioned conditions.

As you are aware, the issuance and contents of this LoI are based on the Bid submitted by you as per the Final RFP including the Transmission Charges and other details regarding the Scheduled COD as contained therein. The Quoted Transmission Charges as submitted by you and the Scheduled COD of transmission elements as agreed by you in your Bid, as per Annexure 21 and Format-1 of Annexure-8 respectively of the Final RFP is enclosed herewith as Schedule-A and incorporated herein by way of reference.

Further, please note that relationship of M/s Ceigall India Limited with the REC Power Development and Consultancy Limited & Central Transmission Utility of India Limited will be governed solely on the basis of the Final RFP.

You are requested to unconditionally accept the LoI, and record on one copy of the LoI, 'Accepted unconditionally', under the signature of the authorized signatory of your Company and return such copy to us within 7 (Seven) days of issue of LoI.

Yours faithfully,

REC Power Development and Consultancy Limited Gurugram

02/09.26

(Ratnesh Kumar)
General Manager (Engg)

Enclosures:

1. Schedule A: Quoted Transmission Charges and the scheduled COD of transmission element submitted in your Bid, as per Annexure 21 and Format-1 of Annexure-8 respectively of the Final RfP.

Copy for kind information to:

1. **The Secretary,** Central Electricity Regulatory Commission, 6th Floor, Tower B, World Trade Centre, Nauroji Nagar, New Delhi-110029
2. **The Joint Secretary (Transmission),** Ministry of Power, Shram Shakti Bhawan, Rafi Marg, New Delhi- 110 004
3. **The Director (Transmission),** Ministry of Power, Govt, of India, Shram Shakti Bhawan, Rafi Marg, New Delhi 110001
4. **The Chairperson,** Central Electricity Authority, Sewa Bhawan, R K Puram, New Delhi-110086
5. **The Chief Operating Officer,** Central Transmission Utility of India Limited, 5th to 10th Floor, Ircon International Tower, Tower No.-1, Plot No. 16, Sector 32, Gurugram, Haryana – 122003
6. **The Chief Engineer (PSP & A - I),** Central Electricity Authority, Sewa Bhawan, R.K. Puram, New Delhi – 110066

ANNEXURE 21 - FORMAT FOR FINANCIAL BID

Quoted Annual Transmission Charges: Rs. 6,086.70 Million

Notes:

1. The Bidders are required to ensure compliance with the provisions of Clause 2.5.3 of this RFP.
2. Quotes to be in Rupees Millions and shall be up to two (2) decimal points.
3. The contents of this format shall be clearly typed.
4. The Financial Bid shall be digitally signed by the authorized signatory in whose name power of attorney as per Clause 2.5.2 is issued.
5. Ensure only one value for annual Transmission Charges is quoted. The same charge shall be payable every year to TSP for the term of TSA.

REC Power Development and Consultancy Limited
Gurugram

Celgall

PURSUIT WITH EXCELLENCE
(As ISO : 9001-2008 Certified Company)
CIN-L45201PB2002PLC025257

ANNEXURE 8 -UNDERTAKING AND DETAILS OF EQUITY INVESTMENT

Format 1: Bidders' Undertakings

Date: 20-07-2026

To,

Chief Executive Officer,
REC Power Development and Consultancy Limited
(A wholly owned subsidiary of REC Limited)
REC Corporate Head Quarter,
D Block, Plot No. I – 4,
Sec – 29 Gurugram – 122 001

Dear Sir,

Sub: Bidders' Undertakings in respect of Bid for selection of Bidder as TSP to establish Inter-State transmission system i.e., "Common Transmission System for evacuation of power from Lakadia (Phase-II: 7.5GW), Jam Khambhaliya (Phase-II: 5.5GW) and Jamnagar (Phase-I: 1GW) - Part-B

We hereby undertake on our own behalf and on behalf of the TSP, that if selected as the Successful Bidder for the Project:

1. The Project shall comply with all the relevant electricity laws, codes, regulations, standards and Prudent Utility Practices, environment laws and relevant technical, operational and safety standards, and we shall execute any agreements that may be required to be executed as per law in this regard.

2. We confirm that the Project shall also comply with the standards and codes as per Clause 1.6.1.2 of the RFP and the TSP shall comply with the provisions contained in the Central Electricity Regulatory Commission Grant of Connectivity, Long-term Access and Mediumterm Open Access in inter-state Transmission and related matters Open Access) Regulations, 2009.

3. We give our unconditional acceptance to the RFP dated 04.05.2026 issued by the BPC and the RFP Project Documents, as amended, and undertake to ensure that the TSP shall execute all the RFP Project Documents, as per the provisions of this RFP.

4. We have submitted the Bid on the terms and conditions contained in the RFP and the RFP Project Documents. Further, the Financial Bid submitted by us is strictly as per the format provided in Annexure 21 of the RFP, without mentioning any deviations, conditions, assumptions or notes in the said Annexure.

REC Power Development and Consultancy Limited Gurugram

5. Our Bid is valid up to the period required under Clause 2.8 of the RFP.

6. Our Bid has been duly signed by authorized signatory and stamped in the manner and to the extent indicated in this RFP and the power of attorney / Board resolution in requisite format as per RFP has been enclosed with this undertaking.

7. We have assumed that if we are selected as the Successful Bidder, the provisions of the Consortium Agreement, to the extent and only in relation to equity lock in and our liability thereof shall get modified to give effect to the provisions of Clause 2.5.8 of this RFP and Article 18.1 of the Transmission Service Agreement. (Note: This is applicable only in case of a Bidding Consortium)

8. We confirm that our Bid meets the Scheduled COD of each transmission Element and the Project as specified below:

S. No	Name of the Transmission Element	Scheduled COD*	Percentage of Quoted Transmission Charges recoverable on Scheduled COD of the Element of the Project	Element(s) which are pre-required for declaring the commercial operation (COD) of the respective Element
1.	Establishment of 765/400 kV, 3x1500 MVA & 400/220 kV, 3x500 MVA Nasik S/s (towards South of Nasik) with 2x330 MVAr 765 kV bus reactor and 2x125 MVAr 400 kV bus reactor	36 months	100 %	All the elements are required simultaneously to ensure their utilization
2.	South Olpad (GIS) – Nasik 765 kV D/C line.			
3.	2 Nos. 765 kV line bays at South Olpad (GIS) S/s (Sec-II) for South Olpad – Nasik 765 kV D/C line.			
4.	765 kV, 240 MVAr Switchable line reactors on each circuit at both ends of South Olpad – Nasik 765 kV D/C line.			
5.	Nasik Pimpalgaon (MSETCL) 400 kV D/c line (Quad ACSR/AAAC/AL59 moose equivalent)			
6.	2 Nos. 400 kV line bays at Pimpalgaon (GIS) S/s for Nasik -Pimpalgaon (MSETCL) 400 kV D/C line			

REC Power Development and Consultancy Limited Gurugram

CEIGAL INDIA LIMITED

	(Quad ACSR/AAAC/AL59 moose equivalent)			

Note: Effective date as per TSA of present scheme shall be matched with the Effective date of "Common Transmission System for evacuation of power from Lakadia (Phase-II: 7.5 GW), Jam Khambhaliya (Phase-II: 5.5 GW) and Jamnagar (Phase-I: 1 GW)" Parts A & C. and "Transmission System for Integration of Power from RE Projects in Lakadia REZ in Gujarat-Phase II (7500 MW)".

Scheduled COD for the Project: 36 months.

9. We confirm that our Financial Bid conforms to all the conditions mentioned in this RFP, and in particular, we confirm that:

a. Financial Bid in the prescribed format of Annexure 21 has been submitted duly signed by the authorized signatory.

b. Financial Bid is unconditional.

c. Only one Financial Bid has been submitted.

10. We have neither made any statement nor provided any information in this Bid, which to the best of our knowledge is materially inaccurate or misleading. Further, all the confirmations, declarations and representations made in our Bid are true and accurate. In case this is found to be incorrect after our acquisition of **JAM KHAMBHALIYA JAMNAGAR POWER TRANSMISSION LIMITED**, pursuant to our selection as Selected Bidder, we agree that the same would be treated as a TSP's Event of Default under Transmission Service Agreement, and relevant provisions of Transmission Service Agreement shall apply.

11. We confirm that there are no litigations or other disputes against us which materially affect our ability to fulfill our obligations with regard to the Project as per the terms of RFP Project Documents.

12. Power of attorney/ Board resolution as per Clause 2.5.2 is enclosed.

Chandan Singh
Authorized Signatory

Signature and name of the authorized signatory of the Company and stamp of Bidding Company ~~or Lead member of Consortium~~

Note:

1. In case of foreign Bidders, refer to clause 2.5.6 (p)

REC Power Development and Consultancy Limited Gurugram

ANNEXURE P-14

Ceigall
PURSUIT WITH EXCELLENCE
(As ISO : 9001-2008 Certified Company)
CIN-L45201PB2002PLC025257

Ref: CIL/RECPDCL/JKJPTL/2026-27/01

Date: 07-09-2026

To,
General Manager(Engineering)
REC Power Development and Consultancy Limited
(A wholly owned subsidiary of REC Limited)
REC Corporate Head Quarter,
D Block, Plot No. 1 – 4,
Sec – 29 Gurugram – 122001

Subject: Acceptance of Letter of Intent for "Establishment of Common Transmission System for evacuation of power from Lakadia (Phase II: 7.5GW), Jam Khambhaliya (Phase-II: 5.5GW) and Jamnagar (Phase-I: 1GW) - Part-B through TBCB"

Ref.: LOI ref. No. RECPDCL/TBCB/Jam Khambhaliya/2026-27/2648 dated 02-09-2026

Dear Sir,

We hereby unconditionally accept the issuance and contents of the LoI and confirm our acceptance by recording "Accepted unconditionally" on each page of the duplicate copy of the LoI, duly signed and stamped by our authorized signatory, which is being returned herewith in compliance with the stipulated requirement.

Further, to requirements under Clause 2.15.2 – for submission of Performance Bank Guarantee, SPA & TSA, we request you to kindly provide detail of beneficiary of the Performance Bank Guarantee for submission.

We assure you of our full cooperation and commitment to successful execution of the project in accordance with the provisions of the Final RFP and the Transmission Service Agreement.

Thank you for entrusting us with this responsibility. We look forward to your kind response at the earliest.

Thanking you,

Yours faithfully,

For Ceigall India Limited,

CEIGALL INDIA LIMITED

Authorised Signatory

Name: Chandan Singh

Encl.: Duly Accepted Duplicate copy of LoI

Unconditionally Accepted

CEIGALL INDIA LIMITED

REC Power Development and Consultancy Limited
(A wholly owned subsidiary of REC Limited, a 'Maharatna CPSE' under Ministry of Power, Govt. of India)

REC Power Development

Ref No.: RECPDCL/TBCB/ Jam Khambhaliya/2026-27/2648 Date: 02.09.2026

ORIGINAL

M/s Ceigall India Limited
Plot No. 452, Udyog Vihar, Phase-V,
GPO - Gurugram, Behind Enkay Tower
Gurgaon-122016

Kind Attention: Shri Chandan Singh

Subject: Establishment of "Common Transmission System for evacuation of power from Lakadia (Phase-II: 7.5GW), Jam Khambhaliya (Phase-II: 5.5GW) and Jamnagar (Phase-I: 1GW) - Part-B" through Tariff Based Competitive Bidding Process (TBCB) – **Letter of Intent**

Sir,

We refer to:

1. The Request for Proposal (RfP) dated 04.05.2026 comprising RfP, Draft Transmission Service Agreement, Share Purchase Agreement and Survey Report dated 20.07.2026 issued to M/s Ceigall India Limited, as regards participation in the Global Invitation for Bids for establishment of "Common Transmission System for evacuation of power from Lakadia (Phase-II: 7.5GW), Jam Khambhaliya (Phase-II: 5.5GW) and Jamnagar (Phase-I: 1GW) - Part-B" through Tariff Based Competitive Bidding process including all correspondence/clarifications /amendments/errata/corrigendum issued by REC Power Development and Consultancy Limited in regard thereto (hereinafter collectively referred to as the 'Final RFP') till the submission Bid Deadline and as listed below:

   (i) Amendment-I dated 14.05.2026,
   (ii) Amendment-II dated 02.06.2026,
   (iii) Amendment-III dated 22.06.2026,
   (iv) Clarification dated 01.07.2026,
   (v) Amendment-IV dated 06.07.2026,
   (vi) Amendment-V & Additional Clarification dated 08.07.2026,
   (vii) Additional Clarification dated 10.07.2026,
   (viii) Additional Clarification dated 11.07.2026,
   (ix) Amendment-VI dated 13.07.2026,
   (x) Amendment-VII dated 20.07.2026,
   (xi) Amendment-VIII dated 28.07.2026,

2. The offer of M/s Ceigall India Limited by way of a Technical Bid pursuant to (1) above submitted on 05.08.2026 in response to the Final RFP.

3. The Initial Price Offer of M/s Ceigall India Limited as submitted on 05.08.2026 in response to the Final RFP.

4. The final offer of M/s Ceigall India Limited, discovered during e-Reverse Auction, concluded on 25.08.2026 in response to the Final RFP.

5. The Technical Bid as in (2) above, the Initial Price Offer as in (3) above and the Final Offer as in (4) above hereinafter collectively referred to as the 'Bid'.

Unconditionally Accepted

We are pleased to inform you that your proposal and offer received by way of the 'Bid' has been accepted and M/s Ceigall India Limited is here by declared as Successful Bidder as per clause 3.6.1 of the Final RFP for the above project and consequently, this Letter of Intent (hereinafter referred to as the 'LoI') is being issued in 2 copies, One original plus One copy.

REC Power Development and Consultancy Limited Gurugram

This LoI is based on the Final RFP and is further contingent upon you satisfying the following conditions:

(a) Acknowledging its issuance and unconditionally accepting its contents and recording 'Accepted unconditionally' under the signature and stamp of your authorized signatory on each page of the duplicate copy of this letter attached herewith and returning the same to REC Power Development and Consultancy Limited within 7 (Seven) days from the date of issuance of LoI.

(b) Completion of various activities as stipulated in the RFP including in particular Clause 2.15.2, Clause 2.15.3 and Clause 2.15.4 of the Final RFP within the timelines as prescribed therein.

(c) Provide the Contract Performance Guarantee of Rs. 90.00 Crore (Rupees Ninety Crore Only) within 10 (Ten) days from issue of this LoI, in favour of the Central Transmission Utility of India Limited, as per the provisions of Clause 2.12.

It may be noted that REC Power Development and Consultancy Limited has the rights available to them under the Final RFP, including rights under clause 2.15.5 and 3.6.3 thereof, upon your failure to comply with the aforementioned conditions.

As you are aware, the issuance and contents of this LoI are based on the Bid submitted by you as per the Final RFP including the Transmission Charges and other details regarding the Scheduled COD as contained therein. The Quoted Transmission Charges as submitted by you and the Scheduled COD of transmission elements as agreed by you in your Bid, as per Annexure 21 and Format-1 of Annexure-8 respectively of the Final RFP is enclosed herewith as Schedule-A and incorporated herein by way of reference.

Further, please note that relationship of M/s Ceigall India Limited with the REC Power Development and Consultancy Limited & Central Transmission Utility of India Limited will be governed solely on the basis of the Final RFP.

You are requested to unconditionally accept the LoI, and record on one copy of the LoI, 'Accepted unconditionally', under the signature of the authorized signatory of your Company and return such copy to us within 7 (Seven) days of issue of LoI.

Yours faithfully,

(Ratnesh Kumar)
General Manager (Engg)

Enclosures:

1. Schedule A: Quoted Transmission Charges and the scheduled COD of transmission element submitted in your Bid, as per Annexure 21 and Format-1 of Annexure-8 respectively of the Final RfP.

Copy for kind information to:

1. **The Secretary,** Central Electricity Regulatory Commission, 6th Floor, Tower B, World Trade Centre, Nauroji Nagar, New Delhi-110029
2. **The Joint Secretary (Transmission),** Ministry of Power, Shram Shakti Bhawan, Rafi Marg, New Delhi- 110 004
3. **The Director (Transmission),** Ministry of Power, Govt, of India, Shram Shakti Bhawan, Rafi Marg, New Delhi 110001
4. **The Chairperson,** Central Electricity Authority, Sewa Bhawan, R K Puram, New Delhi-110086
5. **The Chief Operating Officer,** Central Transmission Utility of India Limited, 5th to 10th Floor, Ircon International Tower, Tower No.-1, Plot No. 16, Sector 32, Gurugram, Haryana – 122003
6. **The Chief Engineer (PSP & A - I),** Central Electricity Authority, Sewa Bhawan, R.K. Puram, New Delhi – 110066

Celgall

PURSUIT WITH EXCELLENCE
(As ISO : 9001-2008 Certified Company)
CIN-L45201PB2002PLC025257

ANNEXURE 8 -UNDERTAKING AND DETAILS OF EQUITY INVESTMENT

Format 1: Bidders' Undertakings

Date: 20-07-2026

To,

Chief Executive Officer,
REC Power Development and Consultancy Limited
(A wholly owned subsidiary of REC Limited)
REC Corporate Head Quarter,
D Block, Plot No. I – 4,
Sec – 29 Gurugram – 122 001

Dear Sir,

Sub: Bidders' Undertakings in respect of Bid for selection of Bidder as TSP to establish Inter-State transmission system i.e., "Common Transmission System for evacuation of power from Lakadia (Phase-II: 7.5GW), Jam Khambhaliya (Phase-II: 5.5GW) and Jamnagar (Phase-I: 1GW) - Part-B

We hereby undertake on our own behalf and on behalf of the TSP, that if selected as the Successful Bidder for the Project:

1. The Project shall comply with all the relevant electricity laws, codes, regulations, standards and Prudent Utility Practices, environment laws and relevant technical, operational and safety standards, and we shall execute any agreements that may be required to be executed as per law in this regard.

2. We confirm that the Project shall also comply with the standards and codes as per Clause 1.6.1.2 of the RFP and the TSP shall comply with the provisions contained in the Central Electricity Regulatory Commission Grant of Connectivity, Long-term Access and Mediumterm Open Access in inter-state Transmission and related matters Open Access) Regulations, 2009.

3. We give our unconditional acceptance to the RFP dated 04.05.2026 issued by the BPC and the RFP Project Documents, as amended, and undertake to ensure that the TSP shall execute all the RFP Project Documents, as per the provisions of this RFP.

4. We have submitted the Bid on the terms and conditions contained in the RFP and the RFP Project Documents. Further, the Financial Bid submitted by us is strictly as per the format provided in Annexure 21 of the RFP, without mentioning any deviations, conditions, assumptions or notes in the said Annexure.

REC Power Development and Consultancy Limited Gurugram

Unconditionally Accepted

ANNEXURE 21 - FORMAT FOR FINANCIAL BID

Quoted Annual Transmission Charges: Rs. 6,086.70 Million

Notes:

1. The Bidders are required to ensure compliance with the provisions of Clause 2.5.3 of this RFP.
2. Quotes to be in Rupees Millions and shall be up to two (2) decimal points.
3. The contents of this format shall be clearly typed.
4. The Financial Bid shall be digitally signed by the authorized signatory in whose name power of attorney as per Clause 2.5.2 is issued.
5. Ensure only one value for annual Transmission Charges is quoted. The same charge shall be payable every year to TSP for the term of TSA.

REC Power Development and Consultancy Limited Gurugram

Unconditionally Accepted

CEBG INDIA LIMITED

5. Our Bid is valid up to the period required under Clause 2.8 of the RFP.

6. Our Bid has been duly signed by authorized signatory and stamped in the manner and to the extent indicated in this RFP and the power of attorney / Board resolution in requisite format as per RFP has been enclosed with this undertaking.

7. We have assumed that if we are selected as the Successful Bidder, the provisions of the Consortium Agreement, to the extent and only in relation to equity lock in and our liability thereof shall get modified to give effect to the provisions of Clause 2.5.8 of this RFP and Article 18.1 of the Transmission Service Agreement. (Note: This is applicable only in case of a Bidding Consortium)

8. We confirm that our Bid meets the Scheduled COD of each transmission Element and the Project as specified below:

S. No	Name of the Transmission Element	Scheduled COD*	Percentage of Quoted Transmission Charges recoverable on Scheduled COD of the Element of the Project	Element(s) which are pre-required for declaring the commercial operation (COD) of the respective Element
1.	Establishment of 765/400 kV, 3x1500 MVA & 400/220 kV, 3x500 MVA Nasik S/s (towards South of Nasik) with 2x330 MVAr 765 kV bus reactor and 2x125 MVAr 400 kV bus reactor	36 months	100 %	All the elements are required simultaneously to ensure their utilization
2.	South Olpad (GIS) – Nasik 765 kV D/C line.			
3.	2 Nos. 765 kV line bays at South Olpad (GIS) S/s (Sec-II) for South Olpad – Nasik 765 kV D/C line.			
4.	765 kV, 240 MVAr Switchable line reactors on each circuit at both ends of South Olpad – Nasik 765 kV D/C line.			
5.	Nasik Pimpalgaon (MSETCL) 400 kV D/c line (Quad ACSR/AAAC/AL59 moose equivalent)			
6.	2 Nos. 400 kV line bays at Pimpalgaon (GIS) S/s for Nasik -Pimpalgaon (MSETCL) 400 kV D/C line			

REC Power Development and Consultancy Limited Gurugram

Unconditionally Accepted

CEIGAL INDIA LIMITED

	(Quad ACSR/AAAC/AL59 moose equivalent)			

Note: Effective date as per TSA of present scheme shall be matched with the Effective date of "Common Transmission System for evacuation of power from Lakadia (Phase-II: 7.5 GW), Jam Khambhaliya (Phase-II: 5.5 GW) and Jamnagar (Phase-I: 1 GW)" Parts A & C. and "Transmission System for Integration of Power from RE Projects in Lakadia REZ in Gujarat-Phase II (7500 MW)".

Scheduled COD for the Project: 36 months.

9. We confirm that our Financial Bid conforms to all the conditions mentioned in this RFP, and in particular, we confirm that:

a. Financial Bid in the prescribed format of Annexure 21 has been submitted duly signed by the authorized signatory.

b. Financial Bid is unconditional.

c. Only one Financial Bid has been submitted.

10. We have neither made any statement nor provided any information in this Bid, which to the best of our knowledge is materially inaccurate or misleading. Further, all the confirmations, declarations and representations made in our Bid are true and accurate. In case this is found to be incorrect after our acquisition of **JAM KHAMBHALIYA JAMNAGAR POWER TRANSMISSION LIMITED**, pursuant to our selection as Selected Bidder, we agree that the same would be treated as a TSP's Event of Default under Transmission Service Agreement, and relevant provisions of Transmission Service Agreement shall apply.

11. We confirm that there are no litigations or other disputes against us which materially affect our ability to fulfill our obligations with regard to the Project as per the terms of RFP Project Documents.

12. Power of attorney/ Board resolution as per Clause 2.5.2 is enclosed.

Chandan Singh
Authorized Signatory

Signature and name of the authorized signatory of the Company and stamp of Bidding Company ~~or Lead member of Consortium~~

Note:

1. In case of foreign Bidders, refer to clause 2.5.6 (p)

Unconditionally Accepted

CEIGALL INDIA LIMITED

REC Power Development and Consultancy Limited Gurugram

ANNEXURE P-15

फा.सं./F. No. 27-44/1/2024-REC DESK
भारत सरकार/Government of India
विद्युत मंत्रालय/Ministry of Power
***

Shram Shakti Bhawan, Rafi Marg,
New Delhi, dated 17th September, 2026

To

The CEO, RECPDCL
Plot No. I-4, Sector-29,
Gurugram (Haryana)-122001.

Subject: Approval of the Government for transfer of shares held by RECPDCL in various SPVs, incorporated for development of Inter/Intra State transmission systems to the Successful Bidder(s), selected through Tariff-Based Competitive Bidding process.

Sir,

I am directed to refer to RECPDCL's letters SEC No. 1/219/2026/2567 dated 31.08.2026, and SEC No. 1/219/2026/2651 dated 03.09.2026 on the subject mentioned above and to convey the approval of Competent Authority for divesting the shareholding of RECPDCL and its nominee in following Special Purpose Vehicles(SPVs), incorporated for carrying out bidding of various Inter/Intra-State transmission projects under Tariff Based Competitive Bidding(TBCB) mode, to the respective successful bidder(s), as indicated in below table, with a view to facilitate transfer of the SPV to the successful bidder, as required under Ministry of Heavy Industries, Department of Public Enterprises O.M. No. 22(I)12009-GM dated 04.02.2010:

Sl. No.	Name of the Project	Name of SPV	Successful Bidder
1	Establishment of 400/220/132 kV AIS Sakoli (Distt. Bhandara)	Sakoli Power Transmission Limited	M/s Ashoka Buildcon Limited
2	Establishment of 765/400/220 kV AIS Balsane (Distt. Dhule)	Balsane Power Transmission Limited	M/s Resonia Limited
3	Construction of 220/132/33 kV AIS substation, Ranipur (Mau) and 220/132/33 kV AIS substation, Chunar (Mirzapur) with their associated lines	Ranipur Chunar Power Transmission Limited	M/s H G Infra Engineering Limited
4	Transmission System for Evacuation of Power Rajasthan REZ Ph-IV (Part-5: 6 GW) Barmer Complex, Barmer-II: 6 GW (Solar) (LCC Configuration)	Barmer HVDC Power Transmission Limited	M/s Power Grid Corporation of India Limited

5	Common Transmission system for evacuation of power from Lakadia (Phase-II: 7.5 GW), Jam Khambhaliya (Phase-II: 5.5 GW) and Jamnagar (Phase-I: 1GW)-Part B	Jam Khambhaliya Jamnagar Power Transmission Ltd	M/s Ceigall India Limited
6	Transmission system for Integration of Power from RE Projects in Lakadia REZ in Gujarat-Phase II (750 MW)	Lakadia II Power Transmission Limited	M/s Power Grid Corporation of India Limited

Yours faithfully,

(Nidhi Juneja)
Under Secretary to the Govt. of India
email: juneja.n13@nic.in /
sopfcrec-mop@gov.in
Tel: 011-23711302

Copy for information and necessary action to:

i. CMD, REC Ltd.

ii. US (Trans), MoP. with the request that transmission wing should also write to concerned states informing about the project for extending all possible help in assessment of compensation to be paid to landowners and also expediting forest clearance, if involved in the project.

iii. Sr. PPS to Secretary (Power)/JS (Distt. &Reforms)/Dir (Distt.), Ministry of Power

Non Judicial

Indian-Non Judicial Stamp
Haryana Government

Date : 09/09/2026

Certificate No. G0I2026I1520

GRN No. 158476470

Stamp Duty Paid : ₹ 500
(Rs. Only)

Penalty : ₹ 0
(Rs. Zero Only)

Seller / First Party Detail

Name: Sbi general Insurance Company limited

H.No/Floor : Na Sector/Ward : Na LandMark : Na

City/Village : Gurugram District : Gurugram State : Haryana

Phone: 63******19

Buyer / Second Party Detail

Name : Central Transmission utility of India ltd

H.No/Floor : Na Sector/Ward : Na LandMark : Na

City/Village: Gurugram District : Gurugram State : Haryana

Phone : 63******19

Purpose : SECURITY BOND OF MORTGAGE DEED

The authenticity of this document can be verified by scanning this QrCode Through smart phone or on the website https://egrashry.nic.in

THIS NON-JUDICIAL STAMP PAPER FORMS AN INTEGRAL PART OF INSURANCE SURETY BOND REFERENCE NO. **202606023971000-00** ISSUED ON **16-10-2026** AMOUNTING **RS. 90,00,00,000/- (RS. NINETY CRORES ONLY)** ISSUED BY SBI GENERAL INSURANCE COMPANY LIMITED IN FAVOUR OF **CENTRAL TRANSMISSION UTILITY OF INDIA LIMITED.**

FOR SBI GENERAL INSURANCE COMPANY LIMITED

SBI general INSURANCE
SURAKSHA AUR BHAROSA DONO

INSURANCE SURETY BOND FOR CONTRACT PERFORMANCE GUARANTEE
(ISB for CPG)

To,

The Office of
Central Transmission Utility of India Limited.
Gurugram, Haryana - 122003

Surety Bond No. 202606023971000-00

ISB effective date: 19-10-2026
ISB validity date: 19-01-2030
ISB claim period expiry date: 19-01-2031

In consideration of the **Ceigall India Limited, having its registered office at A-898, Tagore Nagar, Ludhiana 141001 Punjab.** (hereinafter referred to as the **'Principal Debtor'** for the purposes of this Surety Insurance Contract as provided in Section 126 of the Indian Contract Act, 1872) having been selected to undertake the Transmission Project on the terms and conditions contained in the Transmission Service **Agreement dated 19-10-2026** to be executed as per the Model Transmission Service Agreement provided along with the Request for Proposal **('RFP')** and other RFP Project Documents, subject to the condition of providing a Performance Bank Guarantee or a Surety Insurance Contract guaranteeing/insuring the due performance of the obligations under the Transmission Service Agreement, to the **Central Transmission Utility of India Limited ('CTUIL')** [herein after referred to as the Nodal Agency], the **SBI General Insurance Company Limited, 1st Floor, SCO 07, Sector 14, Gurugram, 122001** having our head office at **2nd floor, B Wing, Fulcrum Building, Sahar Road, Andheri (East), Mumbai-400099** (hereinafter referred to as **"Surety")** hereby agrees unequivocally, irrevocably, absolutely and unconditionally, without demur, to pay to the Nodal Agency at **Central Transmission Utility of India Limited, 5th to 10th Floor, Ircon International Tower, Tower No.-1, Plot No. 16, Sector 32, Gurugram, Haryana – 122003** forthwith on demand in writing from the Nodal Agency, or any Officer authorized by it in this behalf, intimated to the Surety at the address mentioned above, any amount as may be decided by the Nodal Agency not exceeding **Rupees 90.00 Crores (Rs. Ninety Crores Only).**

The Surety hereby acknowledges, accepts and confirms that the Surety has received from the Principal Debtor, by way of premium the entire consideration for the Surety to execute, in favour of the Nodal Agency, this Surety Insurance Contract, as extended by the Surety from time to time and assuming the obligation to pay to the Nodal Agency the amount in terms hereof, without any requirement for payment of any other consideration to the Surety by the Principal Debtor, or otherwise.

This Surety Insurance Contract shall be valid and binding on the Surety, as the principal obligation of the Surety to pay on demand by the Nodal Agency, and shall not be terminable by notice or any change in the constitution of the Surety or the term of the Transmission Service Agreement or by any other reasons whatsoever and the liability hereunder of the Surety shall not be impaired or discharged by any extension of time or variations or alternations made, given, or agreed (with or without the knowledge or consent of the Surety) by or between the Principal Debtor and the Nodal Agency.

SBI general INSURANCE
SURAKSHA AUR BHAROSA DONO

Surety Bond No. 202606023971000-00

The liability of the Surety under this Surety Insurance Contract is restricted to **Rupees 90.00 Crores (Rs Ninety Crores)** only. The Surety Insurance Contract shall remain in force until **19-01-2030**. The Nodal Agency shall be entitled to invoke this Surety Insurance Contract up to three hundred sixty five (365) days after the last date of the validity of this Surety Insurance Contract.

The Surety hereby expressly agrees that it shall not require any proof except for the written demand from the Nodal Agency, containing the statement that the contractor has failed to meet its contractual obligations raised at the above mentioned address of the Surety **SBI General Insurance Company Limited, 1st Floor, SCO 07, Sector 14, Gurugram, 122001** and the Surety shall pay the amount without reference to the Principal Debtor.

Any such demand made by the Nodal Agency on the Surety shall be conclusive and binding not withstanding any difference between the Nodal Agency and the Principal Debtor or any dispute pending before any Court, Tribunal, Arbitrator or any other authority. The Surety undertakes not to revoke this guarantee during its currency without previous consent of the Nodal Agency and further agrees that the Surety Insurance Contract herein contained shall continue to be enforceable till the Nodal Agency discharges this contract or till the expiry of tenor(including Claim period) whichever is earlier.

The Surety shall make payment hereunder within two (02) working days on first demand without restriction or conditions and notwithstanding any objection by the Principal Debtor, **Ceigall India Limited** and/or any other person. The Surety shall not require the Nodal Agency to justify the invocation of this Surety Insurance Contract, nor shall the Surety have any recourse against the Nodal Agency in respect of any payment made hereunder.

This SURETY INSURANCE CONTRACT shall be interpreted in accordance with the laws of India.

This SURETY INSURANCE CONTRACT is being executed by the Surety in terms of the IRDAI (Surety Insurance Contract) Guidelines, 2022 and the Surety hereby acknowledges, accepts and confirms that this Surety Insurance Contract shall be a Contract of Guarantee as provided under Section 126 of the Indian Contract Act, 1872 and further shall be covered by Section 14(3)(b) of the Insolvency and Bankruptcy Code, 2016 (as amended) shall be enforceable as such.

The Surety represents that this Surety Insurance Contract has been established in such form and with such content that it is fully enforceable in accordance with its terms as against the Surety in the manner provided herein.

This SURETY INSURANCE CONTRACT shall not be affected in any manner by reason of merger, amalgamation, restructuring, liquidation, winding up, dissolution or any other change in the constitution of the Surety.

In order to give effect to this surety Bond, the Nodal Agency shall be entitled to act as if the surety insurer were the principal debtor and any change in the constitution of the contractor and/or the surety insurer, whether by their absorption with any other body or corporation or otherwise, shall not in any way or manner affect the liability or obligation of the surety insurer under this surety Bond.

This SURETY INSURANCE CONTRACT shall be a primary obligation of the Surety as a Principal to pay on demand by the Nodal Agency and the Nodal Agency shall not be obliged before enforcing this Surety Insurance Contract to take any action in any court or arbitral proceedings against the Principal Debtor, namely, **Ceigall India Limited** and/or any other person, as the case may be, to make any claim

General Insurance Co. Ltd. MUMBAI

SBI general INSURANCE
SURAKSHA AUR BHAROSA DONO

Surety Bond No. 202606023971000-00

against or any demand on the Principal Debtor, namely, **Ceigall India Limited** and/or any other person, as the case may be, or to give any notice to Principal Debtor, **Ceigall India Limited** and/or any other person, as the case may be, or to enforce any security held by the Nodal Agency or to exercise, levy or enforce any distress, diligence or other process against the Principal Debtor, namely, **Ceigall India Limited** and/or any other person, as the case may be.

The Surety acknowledges that this Surety Insurance Contract is not personal to the Nodal Agency and may be assigned, in whole or in part, (whether absolutely or by way of security) by Nodal Agency to any entity to whom the Nodal Agency is entitled to assign its rights and obligations under the Transmission Service Agreement Provided that any such assignment shall be in compliance with the relevant provisions of the Insurance Act 1938

The Surety hereby agrees and acknowledges that the Nodal Agency shall have a right to invoke this Surety Insurance Contract either in part or in full, as it may deem fit. In case of invocation of this Surety Insurance Contract in part, besides making payment for the part of Surety Insurance Contract invoked, surety at the request of nodal agency shall amend the value of Surety Insurance Contract to the extent of balance amount.

The Surety undertakes not to revoke this Surety Contract during its currency, except with the previous express consent of the Nodal Agency in writing and declares and warrants that it has the power to issue this Surety Contract and the undersigned has full powers to do so on behalf of the Surety.

Signed and Delivered by SBI General Insurance Company Limited
By the hand of Mr. S. Vishwanathan, Head – Underwriting & Reinsurance.

Digitally signed by VISHWANATHAN SUBRAMANIAN
Date: 2026.10.16 21:39:16 +05'30'

(Signature of the Authorized Signatory)
Email- S.VISHWANATHAN@SBIGENERAL.IN , Employee Code- 10022
SBI General Insurance Company Limited is registered with IRDAI License No. 144.

For surety bond confirmation kindly email to – Customer.care@sbigeneral.in/ suretyunderwriting@sbigeneral.onmicrosoft.com

In witness where of:

Signature.....

Name: Ashutosh Garg (11803)

General Insurance ... LUDHIANA

ANNEXURE P-17

SHARE PURCHASE AGREEMENT

BETWEEN

REC POWER DEVELOPMENT AND CONSULTANCY LIMITED

AND

JAM KHAMBHALIYA JAMNAGAR POWER TRANSMISSION LIMITED

AND

CEIGALL INDIA LIMITED

Dated: 12th October, 2026

सत्यमेव जयते

INDIA NON JUDICIAL

Government of National Capital Territory of Delhi

e-Stamp

Certificate No.	:	IN-DL20980285047160Y
Certificate Issued Date	:	12-Oct-2026 12:26 PM
Account Reference	:	SELFPRINT (PU)/ dl-self/ NEHRU/ DL-DLH
Unique Doc. Reference	:	SUBIN-DLDL-SELF37042293649257Y
Purchased by	:	REC POWER DEVELOPMENT AND CONSULTANCY
Description of Document	:	Article 5 General Agreement
Property Description	:	CORE-4, SCOPE COMPLEX, 7, LODHI ROAD, NEW DELHI - 110003
Consideration Price (Rs.)	:	0 (Zero)
First Party	:	JAM KHAMBHALIYA JAMNAGAR POWER TRANSMISSION LIMITED
Second Party	:	CEIGALL INDIA LIMITED
Stamp Duty Paid By	:	JAM KHAMBHALIYA JAMNAGAR POWER TRANSMISSION LIMITED
Stamp Duty Amount(Rs.)	:	500 (Five Hundred only)

SELF PRINTED CERTIFICATE TO BE VERIFIED BY THE RECIPIENT AT WWW.SHCILESTAMP.COM

IN-DL20980285047160Y

Please write or type below this line

SHARE PURCHASE AGREEMENT

This **SHARE PURCHASE AGREEMENT** (**'Agreement'**) made on the 12th day of October, 2026 at New Delhi by and between:

REC POWER DEVELOPMENT AND CONSULTANCY LIMITED, a company incorporated under the Companies Act, 1956, vide CIN-U40101DL2007GOI165779 having its registered office at Core 4, SCOPE Complex, 7, Lodhi Road, New Delhi 110 003, India (hereinafter referred to as "**REC PDCL**", which expression shall, unless it be repugnant to the context or meaning thereof, be deemed to mean and include its successors and permitted assigns) of the **FIRST PART**;

Statutory Alert:
1. The authenticity of this Stamp certificate should be verified at 'www.shcilestamp.com' or using e-Stamp Mobile App of Stock Holding. Any discrepancy in the details on this Certificate and as available on the website / Mobile App renders it invalid.
2. The onus of checking the legitimacy is on the users of the certificate.
3. In case of any discrepancy please inform the Competent Authority.

सत्यमेव जयते

INDIA NON JUDICIAL

Government of National Capital Territory of Delhi

e-Stamp
Reprinted e-Stamp Certificate

Certificate No.	:	**IN-DL18929042665396Y**
Certificate Issued Date	:	08-Oct-2026 06:45 PM
Account Reference	:	SELFPRINT (PU)/ dl-self/ NEHRU/ DL-DLH
Unique Doc. Reference	:	SUBIN-DLDL-SELF33409771363108Y
Purchased by	:	REC POWER DEVELOPMENT AND CONSULTANCY
Description of Document	:	Article 5 General Agreement
Property Description	:	CORE-4, SCOPE COMPLEX, 7, LODHI ROAD, NEW DELHI - 110003
Consideration Price (Rs.)	:	0 (Zero)
First Party	:	JAM KHAMBHALIYA JAMNAGAR POWER TRANSMISSION LIMITED
Second Party	:	CEIGALL INDIA LIMITED
Stamp Duty Paid By	:	JAM KHAMBHALIYA JAMNAGAR POWER TRANSMISSION LIMITED
Stamp Duty Amount(Rs.)	:	500 (Five Hundred only)

SELF PRINTED CERTIFICATE TO BE VERIFIED BY THE RECIPIENT AT WWW.SHCILESTAMP.COM

IN-DL18929042665396Y

Please write or type below this line

AND

JAM KHAMBHALIYA JAMNAGAR POWER TRANSMISSION LIMITED a company incorporated under the Companies Act, 2013 vide CIN-U42202DL2026GOI466346, having its registered office at Core 4, SCOPE Complex, 7, Lodhi Road, New Delhi 110003, India (herein after referred to as "**Company**" which expression shall, unless repugnant to the context, mean and include its successors in interest) of the **SECOND PART**;

RECPDCL **JKJPTL** **CIL**

Statutory Alert:
1. The authenticity of this Stamp certificate should be verified at 'www.shcilestamp.com' or using e-Stamp Mobile App of Stock Holding. Any discrepancy in the details on this Certificate and as available on the website / Mobile App renders it invalid.
2. The onus of checking the legitimacy is on the users of the certificate.
3. In case of any discrepancy please inform the Competent Authority.

सत्यमेव जयते

INDIA NON JUDICIAL

Government of National Capital Territory of Delhi

e-Stamp
Reprinted e-Stamp Certificate

Certificate No.	:	**IN-DL18917630189836Y**
Certificate Issued Date	:	08-Oct-2026 06:30 PM
Account Reference	:	SELFPRINT (PU)/ dl-self/ NEHRU/ DL-DLH
Unique Doc. Reference	:	SUBIN-DLDL-SELF33392086431756Y
Purchased by	:	REC POWER DEVELOPMENT AND CONSULTANCY
Description of Document	:	Article 5 General Agreement
Property Description	:	CORE-4, SCOPE COMPLEX, 7, LODHI ROAD, NEW DELHI - 110003
Consideration Price (Rs.)	:	0 (Zero)
First Party	:	JAM KHAMBHALIYA JAMNAGAR POWER TRANSMISSION LIMITED
Second Party	:	CEIGALL INDIA LIMITED
Stamp Duty Paid By	:	JAM KHAMBHALIYA JAMNAGAR POWER TRANSMISSION LIMITED
Stamp Duty Amount(Rs.)	:	200 (Two Hundred only)

SELF PRINTED CERTIFICATE TO BE VERIFIED BY THE RECIPIENT AT WWW.SHCILESTAMP.COM

IN-DL18917630189836Y

Please write or type below this line

AND

CEIGALL INDIA LIMITED, a company incorporated under the Companies Act, 1956 vide CIN-L45201PB2002PLC025257 and having its registered office at **A-898, Tagore Nagar, Ludhiana Punjab - 141001** (hereinafter referred to as "**Selected Bidder**" which expression shall, unless repugnant to the context or meaning thereof, be deemed to mean and include its successors and permitted assigns) of the **THIRD PART.**

RECPDCL

RECPDCL **JKJPTL** **CIL**

Statutory Alert:

1. The authenticity of this Stamp certificate should be verified at 'www.shcilestamp.com' or using e-Stamp Mobile App of Stock Holding. Any discrepancy in the details on this Certificate and as available on the website / Mobile App renders it invalid.
2. The onus of checking the legitimacy is on the users of the certificate.
3. In case of any discrepancy please inform the Competent Authority.

WHEREAS:

A. Ministry of Power, Government of India vide its Gazette Notification No. CG-DL-E-19022026-270309 dated 12.02.2026 has appointed REC Power Development and Consultancy Limited to be the Bid Process Coordinator (BPC) for the purpose of selection of Bidder as Transmission Service Provider (TSP) to establish "**Common Transmission System for evacuation of power from Lakadia (Phase-II: 7.5 GW), Jam Khambhaliya (Phase-II: 5.5GW) And Jamnagar (Phase-I: 1GW): Part-B**" through tariff based competitive bidding process (hereinafter referred to as the "Project").

B. In accordance with the Bidding Guidelines, the BPC had initiated a competitive bidding process through issue of RFP for selecting a Successful Bidder to build, own, operate and transfer the Project comprising of the Elements mentioned in **Schedule 2** of the TSA. BPC had initiated this process in accordance with and on the terms and conditions mentioned in the RFP Project Documents (as defined hereinafter).

C. BPC has incorporated the Company and has undertaken the preliminary studies, obtained certain approvals, etc. regarding the Project on behalf of the Company

D. REC PDCL along with the Nominees hold one hundred per cent (100%) of the total issued and paid up equity share capital of the Company.

E. Pursuant to the said Bid Process, Ceigall India Limited has been identified as the Selected Bidder vide Letter of Intent dated 02nd September, 2026 issued by the BPC in favour of the Selected Bidder.

F. As envisaged in the RFP, the Shares Seller (as defined hereinafter) has agreed to sell the Sale Shares (as defined hereinafter) to the Selected Bidder and the Selected Bidder has agreed to purchase the Sale Shares from the Shares Seller, subject to and on the terms and conditions set forth in this Agreement.

NOW THEREFORE, IN CONSIDERATION OF THE MUTUAL COVENANTS AND AGREEMENTS SET FORTH IN THIS AGREEMENT AND FOR OTHER GOOD AND VALUABLE CONSIDERATION, THE PARTIES HEREBY AGREE AS FOLLOWS:

1. DEFINITIONS

1.1 Capitalised terms in this Agreement, unless defined in this Agreement shall, in so far as the context admits, have the same meaning in this Agreement as has been ascribed to them in the TSA.

1.2 Additionally, the following terms shall have the meaning hereinafter respectively assigned to them herein below:

(i) **"Acquisition Price"** shall mean INR 18,39,86,174/- (Rupees Eighteen Crore Thirty-Nine Lakhs Eighty-Six Thousand One Hundred and Seventy-Four Only) which is the aggregate consideration payable by the Selected Bidder towards purchase of the Sale Shares at par and for taking over of all assets and liabilities of the Company as on the Closing Date subject to adjustment as per the audited accounts of the Company as on the Closing Date;

(ii) **"Agreement"** or **"the Agreement"** or **"this Agreement"** shall mean this Share Purchase Agreement and shall include the recitals and/or annexures attached hereto, and the contracts, certificates, disclosures and other documents to be executed and delivered pursuant hereto, if any, and any amendments made to this Agreement by the Parties in writing;

(iii) **"Bid Process"** shall mean the competitive bidding process initiated by the BPC, by issuance of RFP for selecting a Successful Bidder to build, own, operate and transfer the Project in accordance with and on the terms and conditions mentioned in the RFP Project Documents;

(iv) **"Board"** shall mean the board of directors of the Company;

(v) **"Closing Date"** shall mean a mutually agreed date between the Parties falling within the period as mentioned in clause 2.15.2 of RFP or on failure of such mutual agreement between the Parties shall be the date falling on the last date of such period;

(vi) "**Encumbrance**" shall mean any mortgage, pledge, lien, charge, security assignment, hypothecation, trust, encumbrance or any other agreement having the effect of creating security interest;

(vii) "**Letter of Intent**" shall have the meaning ascribed thereto under the Bid Documents;

(viii) "**Nominees**" shall mean the Persons, who are named in Annexure A of this Agreement, holding the Sale Shares as nominees of REC PDCL;

(ix) "**Party**" shall mean REC PDCL, Company and the Selected Bidder, referred to individually, and "Parties" shall mean REC PDCL, Company and the Selected Bidder collectively referred to, as relevant;

REC Power Development and Consultancy Limited RECPDCL

Jam Khambhaliya Jamnagar Power Transmission Ltd. Core-4, Scope Complex, Lodhi Road New Delhi 110003

CEIGALL INDIA LIMITED

(x) "**Person**" shall include an individual, an association, a corporation, a partnership, a joint venture, a trust, an unincorporated organisation, a joint stock company or other entity or organisation, including a government or political subdivision, or an agency or instrumentality thereof, and/or any other legal entity;

(xi) "**RFP Project Documents**" shall mean the following documents, referred to collectively:

a. Transmission Service Agreement; and
b. this Agreement.

(xii) "**Representations and Warranties**" shall mean the representations and warranties mentioned in Clause 4 hereto;

(xiii) "**RoC**" shall mean the Registrar of Companies;

(xiv) "**Sale Shares**" shall mean 50,000 shares, representing one hundred percent (100%) of the total issued, subscribed and fully paid-up equity share capital of the Company held by the Shares Seller and Nominees as more particularly described in Annexure A attached hereto;

(xv) "**Shares**" shall mean the fully paid-up equity shares of Company, of face value Rs. 10 each;

(xvi) "**Shares Seller**" shall mean REC PDCL; and

(xvii) "**Transmission Service Agreement**" or "**TSA**" means the agreement titled 'Transmission Service Agreement' to be executed between Central Transmission Utility of India Limited (CTUIL) and Jam Khambhaliya Jamnagar Power Transmission Limited, pursuant to which the TSP shall build, own, operate and transfer the Project and make available the assets of the Project on a commercial basis.

1.3 Interpretation Clause

Unless the context otherwise requires, the provisions of the TSA relating to the interpretation of the TSA shall apply to this Agreement as if they were set out in full in this Agreement and to this end are incorporated herein by reference.

2. TRANSFER OF SHARES

2.1 Subject to the terms and conditions of this Agreement, the Shares Seller agrees to sell and transfer to the Selected Bidder and the Selected Bidder hereby agrees to purchase from the Shares Seller, the Sale Shares free from Encumbrances together with all assets and liabilities of the Company with rights and benefits attached thereto in consideration of the Acquisition Price and the covenants, undertakings and the agreements of the Selected Bidder contained in this Agreement.

2.2 The Shares Seller hereby undertakes to cause the Nominees to transfer part of the Sale Shares held by them as nominees of the Shares Seller to the Nominees of Selected Bidder and execute any documents required to deliver good title to the Sale Shares to the Selected Bidder.

3. CLOSING

3.1 Prior to the Closing Date, the Selected Bidder shall provide to the Shares Seller, valid share transfer forms duly stamped with requisite amount of stamp duty payable on the transfer of the Sale Shares ("**Share Transfer Forms**").

3.2 On the Closing Date, the Shares Seller shall hand over to the Selected Bidder or its authorised representative, the original share certificates representing the Sale Shares ("**Sale Share Certificates**") executed by the Shares Seller and the Nominees, simultaneously against the Selected Bidder handing over to the Shares Seller, demand drafts drawn in favour of the Shares Seller or by confirmation of RTGS transfer in favour of the Shares Seller, for the Acquisition Price payable to it.

Provided that prior to the handing over of the Sale Share Certificates to the Selected Bidder as mentioned above, the Selected Bidder shall provide satisfactory evidence to REC PDCL that on the Closing Date, the Selected Bidder has furnished the Contract Performance Guarantee to Central Transmission Utility of India Limited (CTUIL) and is in a position to comply with all other requirements of Clause 2.15.2 of the RFP.

3.3 The Selected Bidder shall immediately upon receiving the Sale Share Certificates and the Share Transfer Forms, duly execute the Share Transfer Forms and duly lodge the Share Transfer Forms and the Share Certificates with the Company along with the names of its nominees to be appointed on the Board of the Company and the address within the jurisdiction of the Registrar of Companies, Delhi & Haryana, which would be the new registered office of the Company. The Company shall, upon receipt of the said documents from the Selected Bidder, do the following:

(i) Immediately on the Closing Date convene a meeting of the Board, wherein the Board shall pass the following necessary resolutions:

(a) approving the transfer of the Shares constituting the Sale Shares from the Shares Seller and the Nominees to the name of the **Ceigall India Limited** and its nominees and transfer of all assets and liabilities of the Company as on Closing Date;

(b) approving the **Ceigall India Limited** and its nominees as the members of the Company and entering the name of the **Ceigall India Limited** and its nominees in the register of members.

(c) changing the address of the registered office of the Company to the new address as provided by the Selected Bidder as per clause 3.3 above.

(d) appointing the Directors of the Selected Bidder on the Board of the Company.

Immediately pursuant to the resignation of the existing Directors, the newly constituted Board of Directors shall continue/hold the meeting and pass the following resolution:

(e) accepting the resignations of the other existing Directors on the Board and the Chair of the meeting which was taken by one of the existing Directors shall be vacated and appointment of a new Chairman who shall be one of the newly appointed Director.

(f) terminating all the authorizations granted regarding the business and/or operations of the Company or the operations of the bank accounts of the Company, with prospective effect; and

(g) acknowledging and accepting the terms and conditions as contained in the executed copies of the RFP Project Documents and to abide by the provisions contained therein.

(ii) Enter the name of the **Ceigall India Limited** and its nominees as the legal and beneficial owner of the Sale Shares, free of all Encumbrances, in the register of members of the Company;

(iii) Make the necessary endorsements on the Sale Share Certificates, indicating the name of the **Ceigall India Limited** and its nominees as the legal and beneficial owner of the Sale Shares evidenced there under;

(iv) Return the original Sale Share Certificates, duly endorsed in the name of the **Ceigall India Limited** and its nominees, to the **Ceigall India Limited** and its nominees, as the case may be or its authorized representative;

(v) Handover all the statutory registers and records, if any, of the Company to the Selected Bidder.

(vi) Handover certified true copies of the Board resolution passed by the Company as per (i) (c) to (i) (d) of Clause 3.3 (i) to the Selected Bidder.

3.4 The Parties to this Agreement agree to take all measures that may be required to ensure that all the events contemplated in the **Clauses 3.1 to 3.3** above on the Closing Date are completed on the same day.

Notwithstanding the provisions of **Clause 3.3** hereto, all proceedings to be taken and all documents to be executed and delivered by the Parties at the Closing Date shall be deemed to have been taken and executed simultaneously and no proceedings shall be deemed to have been taken nor documents executed or delivered until all have been taken, executed and delivered.

3.5 The Selected Bidder hereby acknowledges and agrees that after the date of acquisition of one hundred percent (100%) of the Shares of the Company by the Selected Bidder as per Clause 3.3, (a) the authority of the BPC in respect of the Bid Process shall forthwith cease and any actions to be taken thereafter regarding the Bid Process will be undertaken by the Central Transmission Utility of India Limited (CTUIL) themselves, (b) all rights and obligations of the BPC shall cease forthwith, (c) all other rights and obligations of the Company shall be of the TSP and (d) any decisions taken by the BPC on behalf of the Company prior to the date of acquisition, shall continue to be binding on the Company and/or Central Transmission Utility of India Limited (CTUIL)as the case may be.

3.6 This Agreement shall be effective from the date of its signing by the Parties and shall remain in force until all the obligations of the respective Parties under Clause 3.3 hereto are fulfilled.

4. REPRESENTATIONS AND WARRANTIES

4.1 The Selected Bidder hereby represents and warrants to the Shares Seller that:

4.1.1 The Selected Bidder has full legal right, power and authority to enter into, execute and deliver this Agreement and to perform the obligations, undertakings and transactions set forth herein, and this Agreement has been duly and validly executed and delivered by the Selected Bidder and constitutes its legal, valid and binding obligations, enforceable against it in accordance with its terms;

4.1.2 The execution, delivery and performance of this Agreement by the Selected Bidder (i) will not violate or contravene any provision of the Memorandum of Association or Articles of the Selected Bidder, (ii) will not violate or contravene any law, statute, rule, regulation, licensing requirement, order, writ, injunction or decree of any court, governmental instrumentality or other regulatory, governmental or public body, agency or authority by which the Selected Bidder is bound or by which any of its and/or their properties or assets are bound, and (iii) except to the extent that the same have been duly and properly completed or obtained, will not require any filing with, or permit, consent or approval of or license from, or the giving of any notice to, any court, governmental instrumentality or other regulatory, governmental or public body, agency or authority, joint venture party, or any other entity or person whatsoever; and

4.1.3 The Selected Bidder is not restricted in any manner whatsoever, including without limitation, on account of any judicial or governmental order, action or proceeding, or any contractual obligation assumed by the Selected Bidder, from purchasing the Sale Shares from the Shares Seller in the manner provided for in this Agreement.

4.2 The Shares Seller hereby represents and warrants to the Selected Bidder that;

4.2.1 The Shares Seller and the Nominees are the legal and beneficial owners of the Sale Shares, free and clear of any Encumbrance and the delivery to the Selected Bidder of the Sale Shares pursuant to the provisions of this Agreement will transfer to the Selected Bidder a good title to the Sale Shares.

4.2.2 The Shares Seller has full legal right, power and authority to enter into, execute and deliver this Agreement and to perform the obligations, undertakings and transactions set forth herein. The execution, delivery and performance of this Agreement will not violate the Memorandum and Articles of Association of the Shares Seller or contravene any contract by which it is bound.

4.2.3 The Shares Seller has obtained requisite authorizations to sell and transfer the Sale Shares to the Selected Bidder. The Shares Seller also represent that it is not prevented from transferring and selling the Sale Shares. Also, to the best of its knowledge, the Sale Shares are not the subject matter of any claim or pending proceeding or threatened by any legal proceeding made by any third party.

4.3 Except as specified in Clause 4.2 above, the Shares Seller shall not be deemed to have, made any representation or warranty whatsoever, whether express or implied, in relation to the Sale Shares or Company, including but not limited to any implied warranty or representation as to the business or affairs of Company.

4.4 The Representations and Warranties are given as at the date of this Agreement except that where a Representation and Warranty is expressed to be made as at another date, the Representation and Warranty is given with respect to that date only.

4.5 Each Representation and Warranty is to be construed independently of the others and is not limited by reference to any other Warranty. The Representations, Warranties and undertakings contained in this **Clause 4** hereto or in any document delivered pursuant to or in connection with this Agreement are continuing in nature and shall survive the Closing Date for a period of one (1) year.

4.6 The Parties represent to each other that all Representations and Warranties provided herein by the respective Party shall be true as of Closing Date.

5. OBLIGATIONS OF THE SELECTED BIDDER

The Selected Bidder agrees that the Shares Seller shall not be liable in any manner, nor shall it assume any responsibility or liability whatsoever, in respect of the business of the Company and its operations or activities, arising after the Closing Date, to any Person or any authority, central, state, local or municipal or otherwise and the same shall be the sole responsibility of the Selected Bidder.

6. MISCELLANEOUS

6.1 NOTICES

a) All notices to be given under this Agreement shall be in writing and in the English language.

b) All notices must be delivered personally or by registered or certified mail or by recognised courier to the addresses below:

Selected Bidder: **Ceigall India Limited,**
Plot No. 70, Institutional Area, Sector 32, Gurugram – 122001

REC PDCL: **REC Power Development and Consultancy Limited**
Core-4, SCOPE Complex, 7, Lodhi Road, New Delhi-110003

Company: **Jam Khambhaliya Jamnagar Power Transmission Limited**
Core-4, SCOPE Complex, 7, Lodhi Road, New Delhi-110003

c) Any Party may by notice of at least fifteen (15) days to the other Parties change the address and / or addresses to which such notices and communications to it are to be delivered or mailed.

6.2 RESOLUTION OF DISPUTES

6.2.1 If any dispute arises between the Parties, in connection with the validity, interpretation, implementation or alleged breach of any provision of this Agreement ("Dispute"), the disputing Parties hereto shall endeavor to settle such Dispute amicably. The attempt to bring about an amicable settlement shall be considered to have failed if not resolved within sixty (60) days from the date of the Dispute.

6.2.2 If the Parties are unable to amicably settle the Dispute in accordance with Clause 6.2.1 within the period specified therein, any of the Parties shall be entitled to within thirty (30) days after expiry of the aforesaid period, refer the Dispute to the Chief Executive Officer/Director of REC PDCL and Chief Executive/ Managing Director of the Selected Bidder for resolution of the said Dispute. The attempt to bring about such resolution shall be considered to have failed if not resolved within thirty (30) days from the date of receipt of a written notification in this regard.

6.2.3 In the event the Dispute is not settled in accordance with Clause 6.2.2 above, any Party to the Dispute shall be entitled to serve a notice invoking this Clause and making a reference to a sole arbitrator. If the Parties to the Dispute cannot agree as to the appointment of the sole arbitrator within thirty (30) days of receipt of the notice of the Party making the reference, then the Shares Seller along with the Company shall appoint one arbitrator and the Selected Bidder shall appoint one arbitrator and the two arbitrators, so appointed shall appoint a third arbitrator. However, after the Closing Date, in such an event the Shares Seller shall appoint one arbitrator and the Selected Bidder along with the Company shall appoint one arbitrator and the two arbitrators, so appointed shall appoint the third arbitrator.

6.2.4 The place of the arbitration shall be New Delhi. The Arbitration proceedings shall be governed by the Arbitration and Conciliation Act, 1996.

6.2.5 The proceedings of arbitration shall be in English language.

6.2.6 The arbitrator's award shall be substantiated in writing. The arbitrators shall also decide on the costs of the arbitration proceedings. In case the arbitrators have not decided on the costs of the arbitration proceedings, each Party to the Dispute shall bear its own costs, in relation to the arbitration proceedings.

REC Power Development and Consultancy Limited RECPDCL

Jam Khambhaliya Jamnagar Power Transmission Ltd. New Delhi 110003 Core-4, Scope Complex, Lodhi Road

CEL CALL INDIA LIMITED

6.3 AUTHORISED PERSON

For the purposes of this Agreement, the Selected Bidder is represented by Mr. Ayyalusamy Saravanan, pursuant to an authorization granted to Mr. Ayyalusamy Saravanan through necessary Board resolutions. Further, Mr. Ayyalusamy Saravanan is also authorized by such resolutions to take any decision which may be required to be taken, do all acts and execute all documents which are or may be required by the Selected Bidder for the proper and effective fulfillment of the rights and obligations under this Agreement. Any action taken or document executed by Mr. Ayyalusamy Saravanan shall be deemed to be acts done or documents executed by the Selected Bidder and shall be binding on the Selected Bidder.

6.4 RESERVATION OF RIGHTS

No forbearance, indulgence or relaxation or inaction by any Party at any time to require performance of any of the provisions of this Agreement shall in any way affect, diminish or prejudice the right of such Party to require performance of that provision, and any waiver or acquiescence by any Party of any breach of any of the provisions of this Agreement shall not be construed as a waiver or acquiescence of any continuing or succeeding breach of such provisions, a waiver of any right under or arising out of this Agreement or acquiescence to or recognition of rights other than that expressly stipulated in this Agreement.

6.5 CUMULATIVE RIGHTS

All remedies of either Party under this Agreement whether provided herein or conferred by statute, civil law, common law, custom or trade usage, are cumulative and not alternative and may be enforced successively or concurrently.

6.6 PARTIAL INVALIDITY

If any provision of this Agreement or the application thereof to any person or circumstance shall be invalid or unenforceable to any extent, the remainder of this Agreement and the application of such provision to persons or circumstances other than those as to which it is held invalid or unenforceable shall not be affected thereby, and each provision of this Agreement shall be valid and enforceable to the fullest extent permitted by law. Any invalid or unenforceable provision of this Agreement shall be replaced with a provision, which is valid and enforceable and most nearly reflects the original intent of the unenforceable provision.

6.7 TERMINATION

If (i) the Closing does not occur on the Closing Date for any reason whatsoever, or (ii) the Letter of Intent is withdrawn or terminated for any reason, or (iii) due to termination of the TSA by the Central Transmission Utility of India Limited (CTUIL) in accordance with Article 3.3.2 or Article 13 of the TSA thereof, REC PDCL shall have a right to terminate this Agreement forthwith by giving a written notice to the other Parties hereto.

6.8 AMENDMENTS

No modification or amendment of this Agreement and no waiver of any of the terms or conditions hereof shall be valid or binding unless made in writing and duly executed by all the Parties.

6.9 ASSIGNMENT

This Agreement and the rights and liabilities hereunder shall bind and inure to the benefit of the respective successors of the Parties hereto, but no Party hereto shall assign or transfer its rights and liabilities hereunder to any other Person without the prior written consent of the other Parties, which will not be unreasonably withheld.

6.10 ENTIRE AGREEMENT

This Agreement constitutes the entire Agreement between the Parties with respect to the subject matter herein and supersedes and cancels any prior oral or written agreement, representation, understanding, arrangement, communication or expression of intent relating to the subject matter of this Agreement.

6.11 COSTS

Each of the Parties hereto shall pay their own costs and expenses relating to the negotiation, preparation and execution of this Agreement and the transactions contemplated by this Agreement.

The Selected Bidder shall be liable to bear and pay the costs in respect of this Agreement and transfer of Sale Shares.

6.12 RELATIONSHIP

None of the provisions of this Agreement shall be deemed to constitute a partnership between the Parties hereto and no Party shall have any authority to bind the other Party otherwise than under this Agreement or shall be deemed to be the agent of the other in any way.

6.13 GOVERNING LAW AND JURISDICTION

This Agreement shall be governed by and construed in accordance with the laws of India and shall be subject to the exclusive jurisdiction of the courts of Delhi.

6.14 COUNTERPARTS

This Agreement may be executed in counterparts by the Parties and each fully executed counterpart shall be deemed to be original.

6.15 CONFIDENTIALITY

The Parties undertake to hold in confidence and not to disclose the terms and conditions of the transaction contemplated hereby to third parties, except:

(a) to their professional advisors;

(b) to their officers, employees, agents or representatives, who need to have access to such information for the proper performance of their activities;

(c) disclosures required under Law;

without the prior written consent of the other Parties.

Provided that the Central Transmission Utility of India Limited (CTUIL)and REC PDCL may at any time, disclose the terms and conditions of transactions contemplated hereby to any person, to the extent stipulated under the law or the Bidding Guidelines.

6.16 INDEMNIFICATION

The Parties hereby agree that transfer of Sale Shares to the Selected Bidder shall vest all the rights, privileges, licenses, responsibilities, liabilities and other obligations pertaining to the Company in the Selected Bidder.

- The Selected Bidder hereby agrees that the Selected Bidder shall not be entitled to any claims or initiate any legal proceedings by itself or through the Transmission Service Provider against the Shares Seller, its directors, officers, employees and the subscribers including the members of any committees appointed by them in respect of any actions or decisions taken by any of them up to the Closing Date in furtherance of the Project referred to in recital A of this Agreement.

- Further, the Selected Bidder hereby indemnifies and holds harmless at all times the Shares Seller against all past, present and future third party claims and liabilities arising out of actions or decisions taken by any of the persons or bodies referred to in Clause 6.3 up to the Closing Date in furtherance of the Project referred to above or otherwise concerning the Company. All such actions shall be defended by the Selected Bidder either itself or through the TSP at its own cost.

- The Parties hereby agree that the provisions of this clause shall survive the termination of this Agreement.

6.17 SURVIVAL

The provisions of Clause 1 (Definitions and Interpretation), Clause 4 (Representations and Warranties), Clause 6.2 (Resolution of Disputes), Clause 6.7 (Termination), Clause 6.15 (Confidentiality), Clause 6.16 (Indemnification) and other representations, warranties, covenants and provisions contained herein that by their nature are intended to survive, shall survive the termination of this Agreement

6.18 FORCE MAJEURE

No party shall be liable for its inability or delay in performing any of its obligations hereunder if such delay is caused by circumstances beyond the reasonable control of the party including delay caused through flood, riot, Act of God, lighting civil commotion, storm, tempest and earthquake.

IN WITNESS WHEREOF, THE PARTIES HERETO HAVE CAUSED THIS AGREEMENT TO BE DULY EXECUTED AND DELIVERED AS OF THE DAY AND YEAR FIRST ABOVE WRITTEN

SIGNED AND DELIVERED by the within named **REC POWER DEVELOPMENT AND CONSULTANCY LIMITED** by the hand of Sh. Rajkumar Sonkar, HoD (CS)

(Authorised pursuant to the resolution passed by its Board of Directors in its meeting held on 02nd September, 2026)

IN THE PRESENCE OF:

WITNESS:
(Name and address)

1. ANIL KUMAR PERALA
DGM (ENGG)
RECPDCL

(Core-4, SCOPE Complex, 7, Lodhi Road, New Delhi-110003)

2. RITAM BISWAS,
Dy. MANAGER (ENGG),
RECPDCL

(Core-4, SCOPE Complex, 7, Lodhi Road, New Delhi-110003)

SIGNED AND DELIVERED by the within named **JAM KHAMBHALIYA JAMNAGAR POWER TRANSMISSION LIMITED** by the hand of Sh. Sumit Mehra, Director

(Authorised pursuant to the resolution passed by its Board of Directors in its meeting held on 12th October, 2026)

WITNESS:
(Name and address)

RITU MADAN ARORA
CM(CS)
REC LIMITED

(Core-4, SCOPE Complex, 7, Lodhi Road, New Delhi-110003)

Nishchay Goel, DM (CS)
REC Limited

(Core-4, SCOPE Complex, 7, Lodhi Road, New Delhi-110003)

SIGNED AND DELIVERED by the within named **CEIGALL INDIA LIMITED** by the hand of Mr. Ayyalusamy Saravanan

(Authorised pursuant to the resolution passed by its Board of Directors in its meeting held on 11th September, 2026)

CEIGALL INDIA LIMITED

WITNESS:
(Name and address)

1. Megha Kainth
Company Secretary

Plot No. 70, Institutional Area, Sector 32, Gurugram - 122001

2. Devesh Kumar
Manager - Planning

Plot No. 70, Institutional Area, Sector 32, Gurugram - 122001

ANNEXURE A

DESCRIPTION OF THE SALE SHARES

S. NO.	NAME OF THE SHAREHOLDER(s)	NUMBER OF EQUITY SHARES HELD	PERCENTAGE OF THE TOTAL PAID UP EQUITY CAPITAL
1.	REC Power Development and Consultancy Limited	49,994	99.988
2.	Shri Jaspal Singh Kushwaha*	1	0.002
3.	Shri Mukul Agarwal*	1	0.002
4.	Shri Ratnesh Kumar*	1	0.002
5.	Smt. Navita Dubal*	1	0.002
6.	Shri Arvind Kumar*	1	0.002
7.	Shri Anil Kumar Perala*	1	0.002
	Total	50,000	100.000

*** Held as nominee of REC PDCL.**

ANNEXURE P-18

TRANSMISSION SERVICE AGREEMENT

FOR

DEVELOPMENT AND OPERATION OF INTER-STATE TRANSMISSION SYSTEM

FOR TRANSMISSION OF ELECTRICITY THROUGH TARIFF BASED COMPETITIVE BIDDING FOR

COMMON TRANSMISSION SYSTEM FOR EVACUATION OF POWER FROM LAKADIA (PHASE-II: 7.5GW), JAM KHAMBHALIYA (PHASE-II: 5.5GW) AND JAMNAGAR (PHASE-I: 1GW): PART-B"

BETWEEN THE

CENTRAL TRANSMISSION UTILITY OF INDIA LIMITED (NODAL AGENCY)

AND

JAM KHAMBHALIYA JAMNAGAR POWER TRANSMISSION LIMITED

19th October ,2026

CENTRAL TRANSMISSION UTILITY OF INDIA LTD.

Jam Khambhaliya Jamnagar Power Transmission Ltd
New Delhi 110003
Core-4, Scope Complex, Lodhi Road

CONTENTS

1	DEFINITIONS AND INTERPRETATIONS	6
2	EFFECTIVENESS AND TERM OF AGREEMENT	18
3	CONDITIONS SUBSEQUENT	20
4	DEVELOPMENT OF THE PROJECT	24
5	CONSTRUCTION OF THE PROJECT	28
6	CONNECTION AND COMMISSIONING OF THE PROJECT	32
7	OPERATION AND MAINTENANCE OF THE PROJECT	37
8	AVAILABILITY OF THE PROJECT	38
9	INSURANCES	39
10	BILLING AND PAYMENT OF TRANSMISSION CHARGES	41
11	FORCE MAJEURE	42
12	CHANGE IN LAW	46
13	EVENTS OF DEFAULT AND TERMINATION	48
14	LIABILITY AND INDEMNIFICATION	53
15	ASSIGNMENTS AND CHARGES	58
16	GOVERNING LAW AND DISPUTE RESOLUTION	60
17	REPRESENTATION AND WARRANTIES	62
18	INDEPENDENT ENGINEER	64
19	MISCELLANEOUS PROVISIONS	66

Jam Khambhaliya Jamnagar Power Transmission Ltd. New Delhi 110003 Core-4, Scope Complex, Lodhi Road

CENTRAL TRANSMISSION UTILITY OF INDIA LTD. सीटीयू CTU

Bond

Indian-Non Judicial Stamp
Haryana Government

Transmission Service Agreement

482
Date :03/09/2026

Certificate No. G0C2026I1887

GRN No. 158212843

Stamp Duty Paid : ₹ 101
(Rs. Only)

Penalty :₹ 0
(Rs. Zero Only)

Deponent

Name: Central Transmission utility of India ltd

H.No/Floor : 2 Sector/Ward : 29 Landmark : Na

City/Village : Gurugram District : Gurugram State : Haryana

Phone : 98******10

Purpose : ARTICLE 5 GENERAL AGREEMENT **to be submitted at Concerned office**

THIS TRANSMISISON SERVICE AGREEMENT (hereinafter referred to as "TSA" or "Agreement" or "the Agreement" or "this Agreement") is made on the ....19th..... [Insert day] of..October... [Insert month] of Two Thousand and Twenty-Six.

BETWEEN:

The **CENTRAL TRANSMISSION UTILITY OF INDIA LIMITED**, a company incorporated under the Companies Act, 2013, having its registered office at **Plot No.2, Sector 29, Gurugram, Haryana 122001, India** & Correspondence address at **Floor No. 5-10, Tower 1, Plot No. 16, IRCON International Tower, Institutional Area, Sector 32, Gurugram, Haryana – 122001, India,** acting as a Nodal Agency (referred to as the "Nodal Agency"), which expression shall unless repugnant to the context or meaning thereof include its successors, and permitted assigns) as Party of the one part;

AND

JAM KHAMBHALIYA JAMNAGAR POWER TRANSMISSION LIMITED, incorporated under the Companies Act, 1956/ Companies Act, 2013 (as the case may be), having its registered office at Core-4, Scope Complex 7, Lodhi Road Delhi, South Delhi, Delhi 110003 (herein after referred to as "Transmission Service Provider" or "TSP" or "ISTS Licensee", which expression shall unless repugnant to the context or meaning thereof include its successors, and permitted assigns) as Party of the other part;

("Nodal Agency" and "TSP" are individually referred to as "Party" and collectively as the "Parties")

CENTRAL TRANSMISSION UTILITY OF INDIA LTD. सीटीयू

Jam Khambhaliya Jamnagar Power Transmission Ltd. Core-4, Scope Complex, Lodhi Road New Delhi 110003

AND WHEREAS:

A) In accordance with the Bidding Guidelines, the Bid Process Coordinator (hereinafter referred to as BPC) had initiated a competitive e-reverse bidding process through issue of RFP for selecting a Successful Bidder to build, own, operate and transfer the Project comprising of the Elements mentioned in Schedule 1 (hereinafter referred to as the Project)

B) Pursuant to the said e-reverse bidding process, the BPC has identified the Successful Bidder, who will be responsible to set up the Project on build, own, operate and transfer basis to provide Transmission Service in accordance with the terms of this Agreement and the Transmission License.

C) The Selected Bidder has submitted the Contract Performance Guarantee and acquired one hundred percent (100%) of the equity shareholding of JAM KHAMBHALIYA JAMNAGAR POWER TRANSMISSION LIMITED, along with all its related assets and liabilities in terms of the provisions of the Share Purchase Agreement

D) The TSP has agreed to make an application for a Transmission License to the Commission for setting up the Project on build, own, operate and transfer basis.

E) The TSP has further agreed to make an application to the Commission for the adoption of the Transmission Charges under Section 63 of the Electricity Act, 2003, along with a certification from the Bid Evaluation Committee in accordance with the Bidding Guidelines issued by Ministry of Power, Government of India.

F) The TSP has agreed to execute the agreement(s) required, if any, under Sharing Regulations within fifteen (15) days from the date of grant of Transmission License from the Commission.

G) The TSP agrees to the terms and conditions laid down under Sharing Regulations, for making available the ISTS and charge the Transmission Charges in accordance with the terms and conditions of Sharing Regulations.

H) The billing, collection and disbursement of the Transmission Charges by the CTU to the ISTS Licensee shall be governed as per Sharing Regulations.

I) The terms and conditions stipulated in the Transmission License issued by the Commission to the TSP shall be applicable to this Agreement and the TSP agrees to comply with these terms and conditions. In case of inconsistency between the Transmission License terms & conditions and the conditions of this Agreement, the conditions stipulated in the Transmission License granted by the Commission shall prevail.

Jam Khambhaliya Jamnagar Power Transmission Ltd. New Delhi 110003 Core-4, Scope Complex, Lodhi Road

CENTRAL TRANSMISSION UTILITY OF INDIA LTD. सीटीयू CTU

NOW, THEREFORE, IN CONSIDERATION OF THE PREMISES AND MUTUAL AGREEMENTS, COVENANTS AND CONDITIONS SET FORTH HEREIN, IT IS HEREBY AGREED BY AND BETWEEN THE PARTIES HERETO AS FOLLOWS:

ARTICLE: 1

1 DEFINITIONS AND INTERPRETATIONS

1.1 Definitions:

1.1.1 The words / expressions used in this Agreement, unless as defined below or repugnant to the context, shall have the same meaning as assigned to them by the Electricity Act, 2003 and the rules or regulations framed there under including those issued / framed by the Commission (as defined hereunder), as amended or re-enacted from time to time or the General Clauses Act, failing which it shall bear its ordinary English meaning.

The words/expressions when used in this Agreement shall have the respective meanings as specified below:

"Acquisition Price" shall have the same meaning as defined in the Share Purchase Agreement;

"Act" or **"Electricity Act"** or **"Electricity Act 2003"** shall mean the Electricity Act, 2003 and any amendments made to the same or any succeeding enactment thereof;

"Affiliate" shall mean a company that either directly or indirectly

i. controls or

ii. is controlled by or

iii. is under common control with

a Bidding Company (in the case of a single company) or a Member (in the case of a Consortium) and "**control**" means ownership by one entity of at least twenty six percent (26%) of the voting rights of the other entity;

"Availability" in relation to the Project or in relation to any Element of the Project, for a given period shall mean the time in hours during that period the Project is capable to transmit electricity at its Rated Voltage and shall be expressed in percentage of total hours in the given period and shall be calculated as per the procedure contained in Appendix – IV to Central Electricity Regulatory Commission (Terms and Conditions of Tariff) Regulations, 2024, attached herewith in Schedule 6;

"Bid" shall mean technical bid and financial bid submitted by the Bidder, in response to the RFP, in accordance with the terms and conditions of the RFP;

"Bid Deadline" shall mean the last date and time for submission of the Bid in response to RFP, as specified in the RFP;

"Bidding Company" shall refer to such single company that has made a Response to RFP for the Project;

"Bidding Consortium / Consortium" shall refer to a group of companies that has collectively made a Response to RFP for the Project;

"Bid Documents" or **"Bidding Documents"** shall mean the RFP, along with all attachments thereto or clarifications thereof;

"Bidding Guidelines" shall mean the "Tariff Based Competitive Bidding Guidelines for Transmission Service" and "Guidelines for Encouraging Competition in Development of Transmission Projects" issued by Government of India, Ministry of Power under Section — 63 of the Electricity Act as amended from time to time;

"Bid Process Coordinator" or **"BPC"** shall mean a person or its authorized representative as notified by the Government of India, responsible for carrying out the process for selection of Bidder who will acquire Transmission Service Provider;

"Bill" shall mean any bill raised by the CTU on the DICs to recover the Transmission Charges pursuant to the Sharing Regulations;

"Business Day" shall mean a day other than Sunday or a statutory holiday, on which the banks remain open for business in the State in which the Nodal Agency's registered office is located and the concerned TSP are located;

"CEA" shall mean the Central Electricity Authority constituted under Section -70 of the Electricity Act;

"Change in law" shall have the meaning ascribed thereto in Article 12;

"Commercial Operation Date" or **"COD"** shall mean the date as per Article 6.2;

"Commission" or **"CERC"** shall mean the Central Electricity Regulatory Commission referred to in sub-section (1) of Section 76 of the Electricity Act, 2003 or its successors and assigns;

"Competent Court of Law" shall mean the Supreme Court or any High Court, or any tribunal or any similar judicial or quasi-judicial body in India that has jurisdiction to adjudicate upon issues relating to the Project;

"Connection Agreement" shall mean the agreement between the CTU or STU or any other concerned parties and the TSP, setting out the terms relating to the connection of the Project to the Inter-connection Facilities and use of the Inter State Transmission System as per the provisions of the IEGC, as the case may be;

"Consultation Period" shall mean the period of sixty (60) days or such longer period as the Parties may agree, commencing from the date of issue of a TSP's Preliminary Notice or a Nodal Agency's Preliminary Termination Notice, as provided in Article 13 of this Agreement, for

consultation between the Parties to mitigate the consequence of the relevant event having regard to all the circumstances;

"Consents, Clearances and Permits" shall mean all authorizations, licenses, approvals, registrations, permits, waivers, privileges, acknowledgements, agreements, or concessions required to be obtained from or provided by any concerned authority for the development, execution and operation of Project including without any limitation for the construction, ownership, operation and maintenance of the Transmission Lines and/or sub-stations;

"Construction Period" shall mean the period from (and including) the Effective Date of the Transmission Service Agreement up to (but not including) the COD of the Element of the Project in relation to an Element and up to (but not including) the COD of the Project in relation to the Project;

"Contractors" shall mean the engineering, procurement, construction, operation & maintenance contractors, surveyors, advisors, consultants, designers, suppliers to the TSP and each of their respective sub-contractors (and each of their respective successors and permitted assigns) in their respective capacities as such;

"Contract Performance Guarantee" shall mean the irrevocable unconditional bank guarantee, or insurance surety bond or Payment on Order Instrument submitted and to be submitted by the TSP or by the Selected Bidder on behalf of the TSP to the Nodal Agency from a bank mentioned in Annexure 17 of the RFP, in the form attached here to as Schedule 8 (for bank guarantee) or Schedule 8A (for insurance surety bond issued by any of the insurance companies authorized by Insurance Regulatory and Development Authority of India), or Schedule-8B (for Payment on Order Instrument issued by PFC/REC/IREDA, in accordance with Article 3 of this Agreement and which shall include the additional bank guarantee or insurance surety bond or Payment on Order Instrument furnished by the TSP under this Agreement;

"Contract Year", for the purpose of payment of Transmission Charges, shall mean the period beginning on the COD, and ending on the immediately succeeding March 31 and thereafter each period of 12 months beginning on April 1 and ending on March 31 provided that the last Contract Year shall end on the last day of the term of the TSA;

"CTU" or **"Central Transmission Utility"** shall have same meaning as defined in the Electricity Act, 2003;

"Day" shall mean a day starting at 0000 hours and ending at 2400 hours;

"D/C" shall mean Double Circuit;

"Designated ISTS Customers" or **"DICs"** shall have the meaning as ascribed in the Sharing Regulations;

"Dispute" shall mean any dispute or difference of any kind between the Parties, in connection with or arising out of this Agreement including any issue on the interpretation and scope of the terms of this Agreement as provided in Article 16;

"Effective Date" for the purposes of this Agreement, shall have the same meaning as per Article 2.1 of this Agreement;

"Electrical Inspector" shall mean a person appointed as such by the Government under sub-section (1) of Section 162 of the Electricity Act 2003 and also includes Chief Electrical Inspector;

"Electricity Rules 2005" shall mean the rules framed pursuant to the Electricity Act 2003 and as amended from time to time;

"Element" shall mean each Transmission Line or each circuit of the Transmission Lines (where there are more than one circuit) or each bay of Sub-station or switching station or HVDC terminal or inverter station of the Project, including ICTs, Reactors, SVC, FSC, etc. forming part of the ISTS, which will be owned, operated and maintained by the concerned ISTS Licensee, and which has a separate Scheduled COD as per Schedule 2 of this Agreement and has a separate percentage for recovery of Transmission Charges on achieving COD as per Schedule 5 of this Agreement;

"Event of Default" shall mean the events as defined in Article 13 of this Agreement;

"Expiry Date" shall be the date which is thirty five (35) years from the COD of the Project;

"Financial Closure" shall mean the first Business Day on which funds are made available to the TSP pursuant to the Financing Agreements;

"Financially Evaluated Entity" shall mean the company which has been evaluated for the satisfaction of the financial requirement set forth in the RFP;

"Financing Agreements" shall mean the agreements pursuant to which the TSP is to finance the Project including the loan agreements, security documents, notes, indentures, security agreements, letters of credit and other documents, as may be amended, modified, or replaced from time to time, but without in anyway increasing the liabilities of the Designated ISTS Customers / Nodal Agency;

"Financial Year" shall mean a period of twelve months at midnight Indian Standard Time (IST) between 1st April & 31st March;

"Force Majeure" and **"Force Majeure Event"** shall have the meaning assigned thereto in Article 11;

"GOI" shall mean Government of India;

"Grid Code" / "IEGC" shall mean the Grid Code specified by the Central Commission under Clause (h) of sub-section (1) of Section 79 of the Electricity Act;

"Independent Engineer" shall mean an agency/ company, appointed by Nodal Agency in accordance with the Guidelines for Encouraging Competition in Development of Transmission Projects.

"Indian Governmental Instrumentality" shall mean Government of India, Government of any State in India or any ministry, department, board, authority, agency, corporation, commission under the direct or indirect control of Government of India or any State Government or both, any political sub-division of any of them including any court or Commission or tribunal or judicial or quasi-judicial body in India but excluding the CTU, TSP and the Designated ISTS Customers;

"Insurances" shall mean the insurance cover to be obtained and maintained by the TSP in accordance with Article 9 of this Agreement;

"Inter connection Facilities" shall mean the facilities as may be set up for transmission of electricity through the use of the Project, on either one or both side of generating station's / CTU's / STU's / ISTS Licensee's / Designated ISTS Customer's substations (as the case may be) which shall include, without limitation, all other transmission lines, gantries, sub-stations and associated equipment not forming part of the Project;

"ISTS Licensee" shall be the TSP under this Agreement, consequent to having been awarded a Transmission License by the CERC and shall be referred to as the TSP or the ISTS Licensee, as the context may require in this Agreement;

"Law" or "Laws" in relation to this Agreement, shall mean all laws including electricity laws in force in India and any statute, ordinance, rule, regulation, notification, order or code, or any interpretation of any of them by an Indian Governmental Instrumentality having force of law and shall include all rules, regulations, decisions and orders of the Commission;

"Lead Member of the Bidding Consortium" or "Lead Member" shall mean a company who commits at least 26% equity stake in the Project, meets the technical requirement as specified in the RFP and so designated by other Member(s) in Bidding Consortium;

"Lenders" means the banks, financial institutions, multilateral funding agencies, non-banking financial companies registered with the Reserve Bank of India (RBI), insurance companies registered with the Insurance Regulatory & Development Authority (IRDA), pension funds regulated by the Pension Fund Regulatory & Development Authority (PFRDA), mutual funds registered with Securities & Exchange Board of India (SEBI), etc.,

CENTRAL TRANSMISSION UTILITY OF INDIA LTD. सीटीयू

Jam Khambhaliya Jamnagar Power Transmission Ltd. Scope Complex, Lodhi Road New Delhi 110003

including their successors and assigns, who have agreed on or before COD of the Project to provide the TSP with the debt financing described in the capital structure schedule, and any successor banks or financial institutions to whom their interests under the Financing Agreements may be transferred or assigned;Provided that, such assignment or transfer shall not relieve the TSP of its obligations to the Nodal Agency under this Agreement in any manner and shall also does not lead to an increase in the liability of the Nodal Agency;

"Lenders Representative" shall mean the person notified by the Lender(s) in writing as being the representative of the Lender(s) or the Security Trustee and such person may from time to time be replaced by the Lender(s) pursuant to the Financing Agreements by written notice to the TSP;

"Letter of Intent" or **"LOI"** shall have the same meaning as in the RFP;

"Member in a Bidding Consortium / Member" shall mean each company in the Bidding Consortium;

"Month" shall mean a period of thirty (30) days from (and excluding) the date of the event;

"Monthly Transmission Charges" for any Element of the Project, after COD of the Element till COD of the Project, and for the Project after COD
of the Project, shall mean the amount of Transmission Charges as specified in Schedule 5 of this Agreement multiplied by no. of days in the relevant month and divided by no. of days in the year;

"National Load Despatch Centre" shall mean the centre established as per sub-section (1) of Section 26 of the Electricity Act 2003;

"**Nodal Agency**" shall mean CTU, which shall execute and implement the Transmission Service Agreement (TSA);

Provided that while taking major decisions, CTU shall consult CEA on technical matters and any other matter it feels necessary.

"Notification" shall mean any notification, issued in the Gazette of India;

"Operating Period" for any Element of the Project shall mean the period from (and including) the COD of such Element of the Project, up to (and including) the Expiry Date and for the Project, shall mean the period from (and including) the COD of the Project, up to (and including) the Expiry Date;

"Parent Company" shall mean an entity that holds at least twenty six percent (26%) of the paid - up equity capital directly or indirectly in the Bidding Company or in the Member in a Bidding Consortium, as the case may be;

"Payment on Order Instrument" shall mean Letter of Undertaking from Indian Renewable Energy Development Agency Limited (IREDA) or Power Finance Corporation Limited (PFC) or REC Limited (REC) [the three non- banking financial institutions under Ministry of New & Renewable Energy (MNRE)/ Ministry of Power (MoP)], to pay in case situation of default of Transmission Service Provider (TSP) in terms of tender conditions/ Power Purchase Agreement (PPA) arises. Such Letter(s) will have same effect as that of a Bank Guarantee issued by any public sector bank. Such "Payment on Order instrument" would have terms and conditions similar to that of any Bank Guarantee given by any public sector bank and would promise to pay the Nodal Agency on demand within stipulated time.

TSPs can seek such Letter(s) by offering due security to the above-mentioned three nonbanking financial institutions mentioned above (IREDA, PFC & REC). Nodal Agency shall not accept the instrument of 'Letter of Undertaking' as described above or in any other form, from any other non-banking financial institutions or bank, except IREDA, PFC & REC.

"Preliminary Termination Notice" shall mean a Nodal Agency's Preliminary Termination Notice as defined in Article 13 of this Agreement;

"Project" shall mean Transmission system for Transmission System For Evacuation of Power from Lakadia (Phase-II: 7.5GW), Jam Khambhaliya (Phase-II: 5.5GW) And Jamnagar (Phase-I: 1GW): Part-B" as detailed in Schedule 1 of this Agreement;

"**Project Assets**" shall mean all physical and other assets relating to and forming part of the Project including:

(a) rights over the Site for substations, ROW for transmission lines;

(b) tangible & intangible assets such as civil works and equipment including foundations, embankments, pavements, electrical systems, communication systems, relief centres, administrative offices, Sub-stations, software, tower and sub-stations designs etc;

(c) project facilities situated on the Site;

(d) all rights of the TSP under the project agreements;

(e) financial assets, such as receivables, security deposits etc;

(f) insurance proceeds; and

(g) Applicable Permits and authorisations relating to or in respect of the Transmission System;"

"Project Execution Plan" shall mean the plan referred to in Article 3.1.3(c) hereof;

"Prudent Utility Practices" shall mean the practices, methods and standards that are generally accepted internationally from time to time by electric transmission utilities for the purpose of ensuring the safe, efficient and economic design, construction, commissioning, operation, repair and maintenance of the Project and which practices, methods and standards shall be adjusted as necessary, to take account of:

(i) operation, repair and maintenance guidelines given by the manufacturers to be incorporated in the Project,

(ii) the requirements of Law, and

(iii) the physical conditions at the Site;

(iv) the safety of operating personnel and human beings;

"Rated Voltage" shall mean voltage at which the Transmission System is designed to operate or such lower voltage at which the line is charged, for the time being, in consultation with the Central Transmission Utility;

"Rebate" shall have the meaning as ascribed to in Article 10.3 of this Agreement;

"RFP" shall mean Request for Proposal dated 04.05.2026 along with all schedules, annexures and RFP Project Documents attached thereto, issued by the BPC for tariff based competitive bidding process for selection of Bidder as TSP to execute the Project, including any modifications, amendments or alterations thereto;

"RFP Project Documents" shall mean the following documents to be entered into in respect of the Project, by the Parties to the respective agreements:

a. Transmission Service Agreement,

b. Share Purchase Agreement,

c. Agreement(s) required under Sharing Regulations and

d. Any other agreement as may be required;

"RLDC" shall mean the relevant Regional Load Dispatch Centre as defined in the Electricity Act, 2003, in the region(s) in which the Project is located;

"RPC" shall mean the relevant Regional Power Committee established by the Government of India for the specific Region(s) in accordance with the Electricity Act, 2003 for facilitating integrated operation of the Power

System in that Region;

"Scheduled COD" in relation to an Element(s) shall mean the date(s) as mentioned in Schedule 2 as against such Element(s) and in relation to the Project, shall mean the date as mentioned in Schedule 2 as against such Project, subject to the provisions of Article 4.4 of this Agreement, or such date as may be mutually agreed among the Parties;

"Scheduled Outage" shall mean the final outage plan as approved by the RPC as per the provisions of the Grid Code;

"Selected Bid" shall mean the technical Bid and the Final Offer of the Selected Bidder submitted during e-reverse bidding, which shall be downloaded and attached in Schedule 7 on or prior to the Effective Date;

"Share Purchase Agreement" shall mean the agreement amongst REC Power Development and Consultancy Limited, JAM KHAMBHALIYA JAMNAGAR POWER TRANSMISSION LIMITED and the Successful Bidder for the purchase of one hundred (100%) per cent of the shareholding of the JAM KHAMBHALIYA JAMNAGAR POWER TRANSMISSION LIMITED for the Acquisition Price, by the Successful Bidder on the terms and conditions as contained therein;

"Sharing Regulations" shall mean the Central Electricity Regulatory Commission (Sharing of Inter-State Transmission Charges and Losses) Regulations, 2020 and as amended from time to time;

"Site" in relation to a substation, switching station or HVDC terminal or inverter station, shall mean the land and other places upon which such station / terminal is to be established;

"SLDC" shall mean the State Load Despatch Centre established as per sub-section (1) of Section 31 of the Electricity Act 2003;

"STU" or **"State Transmission Utility"** shall be the Board or the Government company, specified as such by the State Government under sub-section (1) of Section 39 of the Electricity Act 2003;

"Successful Bidder" or **"Selected Bidder"** shall mean the Bidder selected pursuant to the RFP and who has to acquire one hundred percent (100%) equity shares of JAM KHAMBHALIYA JAMNAGAR POWER TRANSMISSION LIMITED, along with all its related assets and liabilities, which will be responsible as the TSP to establish the Project on build, own, operate and transfer basis as per the terms of the TSA and other RFP Project Documents;

"TSP's Preliminary Notice" shall mean a notice issued by the TSP in pursuant to the provisions of Article 13.3 of this Agreement;

"Target Availability" shall have the meaning as ascribed hereto in Article

8.2 of this Agreement;

"Technically Evaluated Entity" shall mean the company which has been evaluated for the satisfaction of the technical requirement set forth in RFP;

"Termination Notice" shall mean a Nodal Agency's Termination Notice given by the Nodal Agency to the TSP pursuant to the provisions of Articles 3.3.2, 3.3.4, 4.4.2, 5.8, 13.2 and 13.3 of this Agreement for the termination of this Agreement;

"Term of Agreement" for the purposes of this Agreement shall have the meaning ascribed thereto in Article 2.2 of this Agreement;

"Transmission Charges" shall mean the Final Offer of the Selected Bidder during the e-reverse bidding and adopted by the Commission, payable to the TSP as per Sharing Regulations;

"Transmission License" shall mean the license granted by the Commission in terms of the relevant regulations for grant of such license issued under the Electricity Act;

Transmission Service" shall mean making the Project available as per the terms and conditions of this Agreement and Sharing Regulations;

"Unscheduled Outage" shall mean an interruption resulting in reduction of the Availability of the Element(s) / Project (as the case may be) that is not a result of a Scheduled Outage or a Force Majeure Event.

"Ultimate Parent Company" shall mean an entity which owns at least twenty six percent (26%) equity in the Bidding Company or Member of a Consortium, (as the case may be) and in the Technically Evaluated Entity and / or Financially Evaluated Entity (as the case may be) and such Bidding Company or Member of a Consortium, (as the case may be) and the Technically Evaluated Entity and / or Financially Evaluated Entity (as the case may be) shall be under the direct control or indirectly under the common control of such entity;

1.2 Interpretation:

Save where the contrary is indicated, any reference in this Agreement to:

"Agreement" shall be construed as including a reference to its Schedules, Appendices and Annexures;

"Rupee", **"Rupees"** and **"Rs."** shall denote lawful currency of India;

"crore" shall mean a reference to ten million (10,000,000) and a **"lakh"** shall mean a reference to one tenth of a million (1,00,000);

"encumbrance" shall be construed as a reference to a mortgage, charge,

pledge, lien or other encumbrance securing any obligation of any person or any other type of preferential arrangement (including, without limitation, title transfer and retention arrangements) having a similar effect;

"holding company" of a company or corporation shall be construed as a reference to any company or corporation of which the other company or corporation is a subsidiary;

"indebtedness" shall be construed so as to include any obligation (whether incurred as principal or surety) for the payment or repayment of money, whether present or future, actual or contingent;

"person" shall have the meaning as defined in Section 2 (49) of the Act;

"subsidiary" of a company or corporation (the holding company) shall be construed as a reference to any company or corporation:

(i) which is controlled, directly or indirectly, by the holding company, or

(ii) more than half of the issued share capital of which is beneficially owned, directly or indirectly, by the holding company, or

(iii) which is a subsidiary of another subsidiary of the holding company,

for these purposes, a company or corporation shall be treated as being controlled by another if that other company or corporation is able to direct its affairs and/or to control the composition of its board of directors or equivalent body;

"winding-up", **"dissolution"**, **"insolvency"**, or **"reorganization"** in the context of a company or corporation shall have the same meaning as defined in the Companies Act, 1956/ Companies Act, 2013 (as the case may be).

1.2.1 Words importing the singular shall include the plural and vice versa.

1.2.2 This Agreement itself or any other agreement or document shall be construed as a reference to this or to such other agreement or document as it may have been, or may from time to time be, amended, varied, novated, replaced or supplemented.

1.2.3 A Law shall be construed as a reference to such Law including its amendments or re-enactments from time to time.

1.2.4 A time of day shall, save as otherwise provided in any agreement or document be construed as a reference to Indian Standard Time.

1.2.5 Different parts of this Agreement are to be taken as mutually explanatory and supplementary to each other and if there is any inconsistency

between or among the parts of this Agreement, they shall be interpreted in a harmonious manner so as to give effect to each part.

1.2.6 The tables of contents and any headings or sub-headings in this Agreement have been inserted for ease of reference only and shall not affect the interpretation of this Agreement.

1.2.7 All interest payable under this Agreement shall accrue from day to day and be calculated on the basis of a year of three hundred and sixty five (365) days.

1.2.8 The words "hereof" or "herein", if and when used in this Agreement shall mean a reference to this Agreement.

1.2.9 The contents of Schedule 7 shall be referred to for ascertaining accuracy and correctness of the representations made by the Selected Bidder in Article 17.2.1 hereof.

ARTICLE: 2

2 EFFECTIVENESS AND TERM OF AGREEMENT

2.1 Effective Date:

This Agreement shall be effective from later of the dates of the following events:

a. The Selected Bidder, on behalf of the TSP, has provided the Contract Performance Guarantee, as per terms of Article 3.1 of this Agreement; and

b. The Selected Bidder has acquired for the Acquisition Price, one hundred percent (100%) of the equity shareholding of REC Power Development and Consultancy Limited in JAM KHAMBHALIYA JAMNAGAR POWER TRANSMISSION LIMITED along with all its related assets and liabilities as per the provisions of the Share Purchase Agreement. and

c. The Agreement is executed and delivered by the Parties;

2.2 Term and Termination:

2.2.1 Subject to Article 2.2.3 and Article 2.4, this Agreement shall continue to be effective in relation to the Project until the Expiry Date, when it shall automatically terminate.

2.2.2 Post the Expiry Date of this Agreement, the TSP shall ensure transfer of Project Assets to CTU or its successors or an agency as decided by the Central Government at zero cost and free from any encumbrance and liability. The transfer shall be completed within 90 days of expiry of this Agreement failing which CTU shall be entitled to take over the Project Assets Suo moto.

2.2.3 This Agreement shall terminate before the Expiry Date in accordance with Article 13 or Article 3.3.2 or Article 3.3.4.

2.3 Conditions prior to the expiry of the Transmission License

2.3.1 In order to continue the Project beyond the expiry of the Transmission License, the TSP shall be obligated to make an application to the Commission at least two (2) years before the date of expiry of the Transmission License, seeking the Commission's approval for the extension of the term of the Transmission License up to the Expiry Date.

2.3.2 The TSP shall timely comply with all the requirements that may be laid down by the Commission for extension of the term of the Transmission License beyond the initial term of twenty-five (25) years & upto the Expiry Date and the TSP shall keep the Nodal Agency fully informed about the

progress on its application for extension of the term of the Transmission License.

2.4 Survival:

The expiry or termination of this Agreement shall not affect any accrued rights, obligations/ roles and liabilities of the Parties under this Agreement, including the right to receive liquidated damages as per the terms of this Agreement, nor shall it effect the survival of any continuing obligations/ roles for which this Agreement provides, either expressly or by necessary implication, which are to survive after the Expiry Date or termination including those under Articles 3.3.3, 3.3.5, Article 9.3 (Application of Insurance Proceeds), Article 11 (Force Majeure), Article 13 (Events of Default and Termination), Article 14 (Liability & Indemnification), Article 16 (Governing Law & Dispute Resolution), Article 19 (Miscellaneous).

2.5 Applicability of the provisions of this Agreement

2.5.1 For the purpose of Availability, Target Availability and the computation of Availability, Incentive, Penalty, the provisions provided in this Agreement shall apply and any future modifications in the relevant Rules and Regulations shall not be applicable for this Project.

2.5.2 For the purposes of this Agreement for ISTS systems developed under the tariff based competitive bidding framework, the provisions relating to the definitions (Availability and COD), Article 3 (Contract Performance Guarantee and Conditions Subsequent), Article 5 (Construction of the Project), Article 6 (Connection and Commissioning of the Project), Article
8 (Target Availability and calculation of Availability), Article 11 (Force Majeure), Article 12 (Change in Law), Article 13 (Event of Default), Article 14 (Indemnification), Article 15 (Assignment and Charges), Articles 16.1,
16.2 and 16.4 (Governing Laws and Dispute Resolution) and Article 17 (representation and warranties of the ISTS Licensee) of this agreement shall supersede the corresponding provisions under Sharing Regulations.

CENTRAL TRANSMISSION UTILITY OF INDIA LTD. केंद्रीय पारेषण

Jam Khambhaliya Jamnagar Power Transmission Ltd. New Delhi 110003 Core-4, Scope Complex, Lodhi Road

ARTICLE: 3

3 CONDITIONS SUBSEQUENT

3.1 Satisfaction of conditions subsequent by the TSP

3.1.1 Within ten (10) days from the date of issue of Letter of Intent, the Selected Bidder, shall:

a. Provide the Contract Performance Guarantee, and

b. Acquire, for the Acquisition Price, one hundred percent (100%) equity shareholding of JAM KHAMBHALIYA JAMNAGAR POWER TRANSMISSION LIMITED from REC Power Development and Consultancy Limited, who shall sell to the Selected Bidder, the equity shareholding of JAM KHAMBHALIYA JAMNAGAR POWER TRANSMISSION LIMITED, along with all its related assets and liabilities.

c. Execute this Agreement;

The TSP shall, within five (5) working days from the date of acquisition of SPV by the Selected Bidder, undertake to apply to the Commission for the grant of Transmission License and for the adoption of tariff as required under section-63 of the Electricity Act.

The Selected Bidder, on behalf of the TSP, will provide to the Central Transmission Utility of India Limited (being the Nodal Agency) the Contract Performance Guarantee for an amount of **Rs. 90 Crore (Rupees Ninety Crores Only).**

3.1.2 The Contract Performance Guarantee shall be initially valid for a period up to three (3) months after the Scheduled COD of the Project and shall be extended from time to time to be valid for a period up to three (3) months after the COD of the Project. In case the validity of the Contract Performance Guarantee is expiring before the validity specified in this Article, the TSP shall, at least thirty (30) days before the expiry of the Contract Performance Guarantee, replace the Contract Performance Guarantee with another Contract Performance Guarantee or extend the validity of the existing Contract Performance Guarantee until the validity period specified in this Article.

3.1.3 The TSP agrees and undertakes to duly perform and complete the following activities within six (6) months from the Effective Date (except for c) below), unless such completion is affected due to any Force Majeure Event, or if any of the activities is specifically waived in writing by the Nodal Agency:

a. To obtain the Transmission License for the Project from the Commission;

b. To obtain the order for adoption of Transmission Charges by the Commission, as required under Section 63 of the Electricity Act 2003;

c. To submit to the Nodal Agency, CEA & Independent Engineer, the Project Execution Plan, immediately after award of contract(s) and maximum within one hundred and twenty (120) days from the Effective Date. Also, an approved copy each of Manufacturing Quality Plan (MQP) and Field Quality Plan (FQP) would be submitted to Independent Engineer & Nodal Agency in the same time period. The TSP's Project Execution Plan should be in conformity with the Scheduled COD as specified in Schedule 2 of this Agreement, and shall bring out clearly the organization structure, time plan and methodology for executing the Project, award of major contracts, designing, engineering, procurement, shipping, construction, testing and commissioning to commercial operation;

d. To submit to the Nodal Agency, CEA & Independent Engineer a detailed bar (GANTT) chart of the Project outlining each activity (taking longer than one Month), linkages as well as durations;

e. To submit to the Nodal Agency, CEA & Independent Engineer detailed specifications of conductor meeting the functional specifications specified in RFP;

f. To achieve Financial Closure;

g. To provide an irrevocable letter to the Lenders duly accepting and acknowledging the rights provided to the Lenders under the provisions of Article 15.3 of this Agreement and all other RFP Project Documents;

h. To award the Engineering, Procurement and Construction contract ("EPC contract") for the design and construction of the Project and shall have given to such Contractor an irrevocable notice to proceed; and

i. To sign the Agreement(s) required, if any, under Sharing Regulations.

3.2 Recognition of Lenders' Rights by the Nodal Agency

3.2.1 The Nodal Agency hereby accepts and acknowledges the rights provided to the Lenders as per Article 15.3 of this Agreement and all other RFP Project Documents.

3.3 Consequences of non-fulfilment of conditions subsequent

3.3.1 If any of the conditions specified in Article 3.1.3 is not duly fulfilled by the TSP even within three (3) Months after the time specified therein, then on and from the expiry of such period and until the TSP has satisfied all

the conditions specified in Article 3.1.3, the TSP shall, on a monthly basis, be liable to furnish to Central Transmission Utility of India Limited (being the Nodal Agency) **Additional Contract Performance Guarantee of Rupees Nine Crores Only (Rs. 9.00 Crore)** within two (2) Business Days of expiry of every such Month. Such additional Contract Performance Guarantee shall be provided to Central Transmission Utility of India Limited (being the Nodal Agency) in the manner provided in Article 3.1.1 and shall become part of the Contract Performance Guarantee and all the provisions of this Agreement shall be construed accordingly. Central Transmission Utility of India Limited (being the Nodal Agency) shall be entitled to hold and / or invoke the Contract Performance Guarantee, including such additional Contract Performance Guarantee, in accordance with the provisions of this Agreement.

3.3.2 Subject to Article 3.3.4, if:

(i) the fulfilment of any of the conditions specified in Article 3.1.3 is delayed beyond nine (9) Months from the Effective Date and the TSP fails to furnish additional Contract Performance Guarantee to the Nodal Agency in accordance with Article 3.3.1 hereof; or

(ii) the TSP furnishes additional Performance Guarantee to the Nodal Agency in accordance with Article 3.3.1 hereof but fails to fulfil the conditions specified in Article 3.1.3 within a period of twelve (12) months from the Effective Date,

the Nodal Agency shall have the right to terminate this Agreement, by giving a Termination Notice to the TSP, in writing, of at least seven (7) days, with a copy to CEA and the Lenders' Representative in order to enable the Lenders to exercise right of substitution in accordance with Article 15.3 of this Agreement.

3.3.3 If the Nodal Agency elects to terminate this Agreement as per the provisions of Article 3.3.2, the TSP shall be liable to pay to the Nodal Agency an amount of **Rs. 90 Crore (Rupees Ninety Crores Only)** as liquidated damages. The Nodal Agency shall be entitled to recover this amount of damages by invoking the Contract Performance Guarantee to the extent of liquidated damages, which shall be required by the Nodal Agency, and the balance shall be returned to TSP, if any.

It is clarified for removal of doubt that this Article shall survive the termination of this Agreement.

3.3.4 In case of inability of the TSP to fulfil the conditions specified in Article 3.1.3 due to any Force Majeure Event, the time period for fulfilment of the condition subsequent as mentioned in Article 3.1.3, may be extended for a period of such Force Majeure Event. Alternatively, if deemed necessary, this Agreement may be terminated.

by the Nodal Agency by giving a Termination Notice to the TSP, in writing, of at least seven (7) days, with a copy to CEA and the Lenders' Representative in order to enable the Lenders to exercise right of substitution in accordance with Article 15.3 of this Agreement and the Contract Performance Guarantee shall be returned as per the provisions of Article 6.5.1.

Provided, that due to the provisions of this Article 3.3.4, any increase in the time period for completion of conditions subsequent mentioned under Article 3.1.3, shall lead to an equal increase in the time period for the Scheduled COD. If the Scheduled COD is extended beyond a period of one hundred eighty (180) days due to the provisions of this Article 3.3.4, the TSP will be allowed to recover the interest cost during construction corresponding to the period exceeding one hundred eighty (180) days by adjustment in the Transmission Charges in accordance with Schedule 9.

3.3.5 Upon termination of this Agreement as per Articles 3.3.2 and 3.3.4, the Nodal Agency may take steps to bid out the Project again.

3.3.6 The Nodal agency, on the failure of the TSP to fulfil its obligations, if it considers that there are sufficient grounds for so doing, apart from invoking the Contract Performance Guarantee under para 3.3.3 may also initiate proceedings for blacklisting the TSP as per provisions of Article 13.2 of TSA.

3.4 Progress Reports

The TSP shall notify the Nodal Agency and CEA in writing at least once a Month on the progress made in satisfying the conditions subsequent in Articles 3.1.3.

ARTICLE: 4

4 DEVELOPMENT OF THE PROJECT

4.1 TSP's obligations in development of the Project:

Subject to the terms and conditions of this Agreement, the TSP at its own cost and expense shall observe, comply with, perform, undertake and be responsible:

a. for procuring and maintaining in full force and effect all Consents, Clearances and Permits, required in accordance with Law for development of the Project;

b. for financing, constructing, owning and commissioning each of the Element of the Project for the scope of work set out in Schedule 1 of this Agreement in accordance with:

i. the Electricity Act and the Rules made thereof;

ii. the Grid Code;

iii. the CEA Regulations applicable, and as amended from time to time, for Transmission Lines and sub-stations:

- the Central Electricity Authority (Technical Standards for Connectivity to the Grid) Regulations, 2007;
- Central Electricity Authority (Technical Standards for construction of Electrical Plants and Electric Lines) Regulation, 2010;
- Central Electricity Authority (Grid Standard) Regulations, 2010;
- Central Electricity Authority (Safety requirements for construction, operation and maintenance of Electrical Plants and Electrical Lines) Regulation, 2011;
- Central Electricity Authority (Measures relating to Safety and Electricity Supply) Regulation, 2010;
- Central Electricity Authority (Technical Standards for Communication System in Power System Operation) Regulations, 2020.

iv. Safety/ security Guidelines laid down by the Government;

v. Prudent Utility Practices, relevant Indian Standards and the Law;

not later than the Scheduled COD as per Schedule 2 of this Agreement;

c. for entering into a Connection Agreement with the concerned parties in accordance with the Grid Code.

d. for owning the Project throughout the term of this Agreement free and clear of any encumbrances except those expressly permitted under Article 15 of this Agreement;

e. to co-ordinate and liaise with concerned agencies and provide on a timely basis relevant information with regard to the specifications of the Project that may be required for interconnecting the Project with the Interconnection Facilities;

f. for providing all assistance to the Arbitrators as they may require for the performance of their duties and responsibilities;

g. to provide to the Nodal Agency and CEA, on a monthly basis, progress reports with regard to the Project and its execution (in accordance with prescribed form) to enable the CEA to monitor and co-ordinate the development of the Project matching with the Interconnection Facilities;

h. to comply with Ministry of Power order no. 25-11/6/2018 — PG dated 02.07.2020 as well as other Guidelines issued by Govt. of India pertaining to this;

i. to procure the products associated with the Transmission System as per provisions of Public Procurement (Preference to Make in India) orders issued by Ministry of Power vide orders No. A-1/2021- FSC- Part (5) dated 16.11.2021 and No.: P45021/2/2017-PP (BE-II)-Part-4 Vol. II dated 19.07.2024 issued by Ministry of Power for transmission sector, as amended from time to time read with Department for Promotion of Industry and Internal Trade (DPIIT) orders in this regard (Procuring Entity as defined in above orders shall deemed to have included Selected Bidder and/ or TSP).

Also, to comply with Department of Expenditure, Ministry of Finance vide Order (Public Procurement No 1) bearing File No. 6/18/2019-PPD dated 23.07.2020, Order (Public Procurement No 2) bearing File No. 6/18/2019-PPD dated 23.07.2020 and Order (Public Procurement No. 3) bearing File No. 6/18/2019- PPD, dated 24.07.2020, Office Memorandum (OM) No. F.18/37/2020-PPD dated 08.02.2021, OM No. F. 12/1/2021- PPD(Pt.) dated 02.03.2021, OM No. F.7/10/2021-PPD dated 08.06.2021

and Order (Public Procurement No 4) bearing File No. F.7/10/2021- PPD dated 23.02.2023, as amended from time to time, regarding public procurement from a bidder of a country, which shares land border with India;

j. to submit to Nodal Agency information in the prescribed format [To be devised by Nodal Agency] for ensuring compliance to Article 4.1 i) above.

k. to comply with all its obligations undertaken in this Agreement.

4.2 Roles of the Nodal Agency in implementation of the Project:

4.2.1 Subject to the terms and conditions of this Agreement, the Nodal Agency shall be the holder and administrator of this Agreement and shall inter alia:

a. appoint an Independent Engineer within 90 days of the Effective Date

b. provide letters of recommendation to the concerned Indian Governmental Instrumentality, as may be requested by the TSP from time to time, for obtaining the Consents, Clearances and Permits required for the Project;

c. coordinate among TSP and upstream/downstream entities in respect of Interconnection Facilities; and

d. monitor the implementation of the Agreement and take appropriate action for breach thereof including revocation of guarantees, cancellation of Agreement, blacklisting etc

e. provide all assistance to the Arbitrators as required for the performance of their duties and responsibilities; and

f. perform any other responsibility (ies) as specified in this Agreement.

4.3 Time for Commencement and Completion:

a. The TSP shall take all necessary steps to commence work on the Project from the Effective Date of the Agreement and shall achieve Scheduled COD of the Project in accordance with the time schedule specified in Schedule 2 of this Agreement;

b. The COD of each Element of the Project shall occur no later than the Scheduled COD or within such extended time to which the TSP shall be entitled under Article 4.4 hereto.

4.4 Extension of time:

4.4.1 In the event that the TSP is unable to perform its obligations for the

reasons solely attributable to the Nodal Agency, the Scheduled COD shall be extended, by a 'day to day' basis, subject to the provisions of Article 13.

4.4.2 In the event that an Element or the Project cannot be commissioned by its Scheduled COD on account of any Force Majeure Event as per Article 11, the Scheduled COD shall be extended, by a 'day to day' basis for a period of such Force Majeure Event. Alternatively, if deemed necessary, the Nodal Agency may terminate the Agreement as per the provisions of Article
13.4 by giving a Termination Notice to the TSP, in writing, of at least seven (7) days, with a copy to CEA and the Lenders' Representative in order to enable the Lenders to exercise right of substitution in accordance with Article 15.3 of this Agreement.

4.4.3 If the Parties have not agreed, within thirty (30) days after the affected Party's performance has ceased to be affected by the relevant circumstance, on how long the Scheduled COD should be deferred by, any Party may raise the Dispute to be resolved in accordance with Article 16.

4.5 Metering Arrangements:

4.5.1 The TSP shall comply with all the provisions of the IEGC and the Central Electricity Authority (Installation and Operation of Meters) Regulations, 2006 as amended from time to time, with regard to the metering arrangements for the Project. The TSP shall fully cooperate with the CTU / STU / RLDC and extend all necessary assistance in taking meter readings.

4.6 Interconnection Facilities:

4.6.1 Subject to the terms and conditions of this Agreement, the TSP shall be responsible for connecting the Project with the interconnection point(s) specified in Schedule 1 of this Agreement. The Interconnection Facilities

shall be developed as per the scope of work and responsibilities assigned in Schedule 1 of this Agreement. The Nodal Agency shall be responsible for coordinating to make available the Interconnection Facilities.

4.6.2 In order to remove any doubts, it is made clear that the obligation of the TSP within the scope of the project is to construct the Project as per Schedule-1 of this Agreement and in particular to connect it to the Interconnection Facilities as specified in this Agreement.

CENTRAL TRANSMISSION UTILITY OF INDIA LTD. सीटीयू CTU

Jam Khambhaliya Jamnagar Power Transmission Ltd. New Delhi 110003 Core-4, Scope Complex, Lodhi Road

ARTICLE: 5

5 CONSTRUCTION OF THE PROJECT

5.1 TSP's Construction Responsibilities:

5.1.1 The TSP, at its own cost and expense, shall be responsible for designing, constructing, erecting, testing and commissioning each Element of the Project by the Scheduled COD in accordance with the Regulations and other applicable Laws specified in Article 4.1 of this Agreement.

5.1.2 The TSP acknowledges and agrees that it shall not be relieved from any of its obligations under this Agreement or be entitled to any extension of time or any compensation whatsoever by reason of the unsuitability of the Site or Transmission Line route(s).

5.1.3 The TSP shall be responsible for obtaining all Consents, Clearances and Permits related but not limited to road / rail / river / canal / power line / crossings, Power and Telecom Coordination Committee (PTCC), defence, civil aviation, right of way / way-leaves and environmental & forest clearances from relevant authorities required for developing, financing, constructing, maintaining/ renewing all such Consents, Clearances and Permits in order to carry out its obligations under this Agreement in general and shall furnish to the Nodal Agency such copy/ies of each Consents, Clearances and Permits, on demand. Nodal Agency shall provide letters of recommendation to the concerned Indian Governmental Instrumentality, as may be requested by the TSP from time to time for obtaining the Consents, Clearances and Permits required for the Project.

5.1.4 The TSP shall be responsible for:

(a) acquisition of land for location specific substations, switching stations or HVDC terminal or inverter stations. Also, the actual location of Greenfield substations (Switching Stations or HVDC Terminal or Inverter Stations) for a generation pooling substation and for load serving substations in the scope of TSP;

- For a Generation Pooling Substation shall not be beyond 3 Km radius of the location proposed by the BPC in their Survey Report.

- For Load Serving Substation within the scope of TSP shall not be beyond 5 Km radius of the location proposed by the BPC in their Survey Report.

CENTRAL TRANSMISSION UTILITY OF INDIA LTD. सीटीयू CTU

Jam Khambhaliya Jamnagar Power Transmission Ltd. New Delhi 110003 Core-4, Scope Complex, Lodhi Road

- For an intermediate Substation shall not be beyond 10 Km radius of the location proposed by the BPC in their Survey Report.

(b) final selection of Site including its geo-technical investigation;

(c) survey and geo-technical investigation of line route in order to determine the final route of the Transmission Lines;

(d) seeking access to the Site and other places where the Project is being executed, at its own risk and costs, including payment of any crop, tree compensation or any other compensation as may be required.

5.1.5 In case the Project involves any resettlement and rehabilitation, the resettlement and rehabilitation package will be implemented by the State Government authorities, for which the costs is to be borne by the TSP and no changes would be allowed in the Transmission Charges on account of any variation in the resettlement and rehabilitation cost. The TSP shall provide assistance on best endeavour basis, in implementation of the resettlement and rehabilitation package, if execution of such package is in the interest of expeditious implementation of the Project and is beneficial to the Project affected persons.

5.2 Appointing Contractors:

5.2.1 The TSP shall conform to the requirements as provided in this Agreement while appointing Contractor(s) for procurement of goods & services.

5.2.2 The appointment of such Contractor(s) shall neither relieve the TSP of any of its obligations under this Agreement nor make the Nodal Agency liable for the performance of such Contractor(s).

5.3 Monthly Progress Reporting:

The TSP shall provide to the CEA, Nodal Agency & Independent Engineer, on a monthly basis, progress reports along with likely completion date of each Element with regard to the Project and its execution (in accordance with prescribed form). The Nodal Agency/ CEA shall monitor the development of the Project for its timely completion for improving and augmenting the electricity system as a part of its statutory responsibility.

5.4 Quality of Workmanship:

The TSP shall ensure that the Project is designed, built and completed in a good workmanship using sound engineering and construction practices, and using only materials and equipment that are new and manufactured as per the MQP and following approved FQP for erection, testing & commissioning and complying with Indian /International Standards such

that, the useful life of the Project will be at least thirty five (35) years from the COD of the Project.

The TSP shall ensure that all major substation equipment / component (e.g. transformers, reactors, Circuit Breakers, Instrument Transformers (IT), Surge Arresters (SA), Protection relays, clamps & connectors etc.), equipment in terminal stations of HVDC installations including Thyristor/ IGBT valves, Converter Transformers, smoothing reactors, Transformer bushings and wall bushings, GIS bus ducts, towers and gantry structures and transmission towers or poles and line materials (conductors, earthwire, OPGW, insulator, accessories for conductors, OPGW & earthwires, hardware fittings for insulators, aviation lights etc), facilities and system shall be designed, constructed and tested (Type test, Routine tests, Factory Acceptance Test (FAT)) in accordance with relevant CEA Regulations and Indian Standards. In case Indian Standards for any particular equipment/ system/ process is not available, IEC/ IEEE or equivalent International Standards and Codes shall be followed.

5.5 Progress Monitoring & Quality Assurance:

5.5.1 The Project Execution Plan submitted by the TSP in accordance with Article3.1.3c) shall comprise of detailed schedule of all the equipments /items/materials required for the Project, right from procurement of raw material till the dispatch from works and receipt at the site. Further, it should also include various stages of the construction schedule up to the commissioning of the Project.

5.5.2 Nodal Agency, CEA & Independent Engineer shall have access at all reasonable times to the Site and to the Manufacturer's works and to all such places where the Project is being executed.

5.5.3 Independent Engineer shall ensure conformity of the conductor specifications with the functional specifications specified in RFP.

5.5.4 The Independent Engineer shall monitor the following during construction of the Project:

a) Quality of equipments, material, foundation, structures and workmanship etc. as laid down in Article 5.4 and 6.1.4 of the TSA. Specifically, quality of Sub-station equipments, transmission line material and workmanship etc. would be checked in accordance with the Article 5.4.

b) Progress in the activities specified in Condition Subsequent

c) Verification of readiness of the elements including the statutory clearances & completion of civil works, fixing of all components and finalisation of punch points (if any) prior to charging of the elements

d) Progress of construction of substation and Transmission Lines

5.5.5 The progress shall be reviewed by the Independent Engineer against the Project Execution Plan. The Independent Engineer shall prepare its report on monthly basis and submit the same to Nodal Agency highlighting the progress achieved till the end of respective month vis-à-vis milestone activities, areas of concern, if any, which may result in delay in the timely completion of the Project. Based on the progress, Nodal Agency and/ or CEA shall issue written instructions to the TSP to take corrective measures, as may be prudent for the timely completion of the Project. In case of any deficiency, the Nodal Agency would be at liberty to take action in accordance with the procedure of this Agreement.

5.5.6 For any delay in commissioning any critical Element(s), as identified in Schedule 1 & Schedule 2 of this Agreement, beyond a period of 45 days shall lead to a sequestration of 10% of the Contract Performance Guarantee.

5.6 Site regulations and Construction Documents

The TSP shall abide by the Safety Rules and Procedures as mentioned in Schedule 3 of this Agreement

The TSP shall retain at the Site and make available for inspection at all reasonable times, copies of the Consents, Clearances and Permits, construction drawings and other documents related to construction.

5.7 Supervision of work:

The TSP shall provide all necessary superintendence for execution of the Project and its supervisory personnel shall be available to provide full-time superintendence for execution of the Project. The TSP shall provide skilled personnel who are experienced in their respective fields.

5.8 Remedial Measures:

The TSP shall take all necessary actions for remedying the shortfall in achievement of timely progress in execution of the Project, if any, as intimated by the Independent Engineer and/ or CEA and/ or the Nodal Agency. However, such intimation by the Independent Engineer and/ or CEA and/ or the Nodal Agency and the subsequent effect of such remedial measures carried out by the TSP shall not relieve the TSP of its obligations in the Agreement. Independent Engineer and/ or CEA and/ or the Nodal Agency may carry out random inspections during the Project execution, as and when deemed necessary by it. If the shortfalls as intimated to the TSP are not remedied to the satisfaction of the CEA and/ or the Nodal Agency, this Agreement may be terminated by the Nodal Agency by giving a Termination Notice to the TSP, in writing, of at least seven (7) days, with a copy to CEA and the Lenders' Representative in order to enable the Lenders to exercise right of substitution in accordance with Article 15.3 of this Agreement.

ARTICLE: 6

6 CONNECTION AND COMMISSIONING OF THE PROJECT

6.1 Connection with the Inter-Connection Facilities:

6.1.1 The TSP shall give the RLDC(s), CTU, / STU, as the case may be, and any other agencies as required, at least sixty (60) days advance written notice of the date on which it intends to connect an Element of the Project, which date shall not be earlier than its Scheduled COD or Schedule COD extended as per Article 4.4.1 & 4.4.2 of this Agreement, unless mutually agreed to by Parties. Further, any preponing of COD of any element prior to Scheduled COD must be approved by the Nodal Agency.

6.1.2 The RLDC / SLDC (as the case may be) or the CTU / STU (as the case may be), for reasonable cause, including non-availability of Interconnection Facilities as per Article 4.2, can defer the connection for up to fifteen (15) days from the date notified by the TSP pursuant to Article 6.1.1, if it notifies to the TSP in writing, before the date of connection, of the reason for the deferral and when the connection is to be rescheduled. However, no such deferment on one or more occasions would be for more than an aggregate period of thirty (30) days. Further, the Scheduled COD would be extended as required, for all such deferments on "day to day" basis.

6.1.3 Subject to Articles 6.1.1 and 6.1.2, any Element of Project may be connected with the Interconnection Facilities when:

a. it has been completed in accordance with this Agreement and the Connection Agreement;

b. it meets the Grid Code, Central Electricity Authority (Technical Standards for Connectivity to the Grid) Regulations, 2007 as amended from time to time and all other Indian legal requirements, and

c. The TSP has obtained the approval in writing of the Electrical Inspector certifying that the Element is ready from the point of view of safety of supply and can be connected with the Interconnection Facilities.

d. It has satisfactorily met all the testing requirements as per Articles 6.1.4

6.1.4 Site Acceptance Test (SAT)/ pre-commissioning tests of all major substation equipment, component, system, facilities shall be successfully carried out before commissioning. The Type tests, FAT and SAT reports should be available at the substation / terminal station of

HVDC installations for ready reference of operation and maintenance staff and has to be made available to the Independent Engineer appointed for quality monitoring or their authorised representatives, as and when they wish to examine the same.

6.2 Commercial Operation:

6.2.1 An Element of the Project shall be declared to have achieved COD twenty four (24) hours following the connection of the Element with the Interconnection Facilities pursuant to Article 6.1 or seven (7) days after the date on which it is declared by the TSP to be ready for charging but is not able to be charged for reasons not attributable to the TSP subject to Article 6.1.2.

Provided that an Element shall be declared to have achieved COD only after all the Element(s), if any, which are pre-required to have achieved COD as defined in Schedule 2 of this Agreement, have been declared to have achieved their respective COD.

6.2.2 Once any Element of the Project has been declared to have achieved deemed COD as per Article 6.2.1 above, such Element of the Project shall be deemed to have Availability equal to the Target Availability till the actual charging of the Element and to this extent, TSP shall be eligible for the Monthly Transmission Charges applicable for such Element

6.3 Compensation for Direct Non Natural Force Majeure Event or Indirect Non Natural Force Majeure Event or Natural Force Majeure Event (affecting the Nodal Agency)

If the TSP is otherwise ready to connect the Element(s) of the Project and has given due notice, as per provisions of Article 6.1.1, to the concerned agencies of the date of intention to connect the Element(s) of the Project, where such date is not before the Scheduled COD, but is not able to connect the Element(s) of the Project by the said date specified in the notice, due to Direct Non Natural Force Majeure Event or Indirect Non Natural Force Majeure Event or Natural Force Majeure Event affecting the Nodal Agency, provided such Direct Non Natural Force Majeure Event or Indirect Non Natural Force Majeure Event or Natural Force Majeure Event affecting the Nodal Agency has continued for a period of more than three (3) continuous or non-continuous Months, the TSP shall, until the effects of the Direct Non Natural Force Majeure Event or of Indirect Non Natural Force Majeure Event or Natural Force Majeure Event affecting the Nodal Agency no longer prevent the TSP from connecting the Element(s) of the Project, be deemed to have achieved COD relevant to that date and to this extent, be deemed to have been providing Transmission Service with effect from the date notified, and shall be treated as follows:

a. In case of delay due to Direct Non Natural Force Majeure Event, TSP is entitled for Transmission Charges calculated on Target Availability for the period of such events in excess of three (3) continuous or non continuous Months in the manner provided in (c) below.

b. In case of delay due to Indirect Non Natural Force Majeure Event or Natural Force Majeure Event affecting the Nodal Agency, TSP is entitled for payment for debt service which is due under the Financing Agreements, subject to a maximum of Transmission Charges calculated on Target Availability, for the period of such events in excess of three (3) continuous or non continuous Months in the manner provided in (c) below.

c. In case of delay due to Direct Non Natural Force Majeure Event or Indirect Non Natural Force Majeure Event or Natural Force Majeure Event affecting the Nodal Agency, the TSP is entitled for payments mentioned in (a) and (b) above, after commencement of Transmission Service, in the form of an increase in Transmission Charges. These amounts shall be paid from the date, being the later of a) the date of cessation of such Indirect Non Natural Force Majeure Event or Natural Force Majeure Event affecting the Nodal Agency and b) the completion of sixty (60) days from the receipt of the Financing Agreements by the Nodal Agency from the TSP.

Provided such increase in Transmission Charges shall be so as to put the TSP in the same economic position as the TSP would have been in case the TSP had been paid amounts mentioned in (a) and
(b) above in a situation where the Force Majeure Event had not occurred.

For the avoidance of doubt, it is clarified that the charges payable under this Article 6.3.1 shall be recovered as per Sharing Regulations.

6.4 Liquidated Damages for Delay in achieving COD of Project:

If the TSP fails to achieve COD of any Element of the Project or the Project, by the Element's / Project's Scheduled COD or such Scheduled COD as extended under Articles 4.4.1 and 4.4.3, then the TSP shall pay to the Nodal Agency, a sum equivalent to 3.33% of Monthly Transmission Charges applicable for the Element of the Project [in case where no Elements have been defined, to be on the Project as a whole] / Project, for each day of delay up to sixty (60) days of delay and beyond that time limit, at the rate of five percent (5%) of the Monthly Transmission Charges applicable to such Element / Project, as liquidated damages for such

delay and not as penalty, without prejudice to any rights of the Nodal Agency under the Agreement.

6.4.1 The TSP's maximum liability under this Article 6.4 shall be limited to the amount of liquidated damages calculated in accordance with Article 6.4.1 for and up to six (6) months of delay for the Element or the Project.

Provided that, in case of failure of the TSP to achieve COD of the Element of the Project even after the expiry of six (6) months from its Scheduled COD, the provisions of Article 13 shall apply.

6.4.2 The TSP shall make payment to the Nodal Agency of the liquidated damages calculated pursuant to Article 6.4.1 within ten (10) days of the earlier of:

a. the date on which the applicable Element achieves COD; or

b. the date of termination of this Agreement.

The payment of such damages shall not relieve the TSP from its obligations to complete the Project or from any other obligation and liabilities under the Agreement.

6.4.3 If the TSP fails to pay the amount of liquidated damages to the Nodal Agency within the said period of ten (10) days, the Nodal Agency shall be entitled to recover the said amount of the liquidated damages by invoking the Contract Performance Guarantee. If the then existing Contract Performance Guarantee is for an amount which is less than the amount of the liquidated damages payable by the TSP to the Nodal Agency under this Article 6.3 and the TSP fails to make payment of the balance amount of the liquidated damages not covered by the Contract Performance Guarantee, then such balance amount shall be deducted from the Transmission Charges payable to the TSP. The right of the Nodal Agency to encash the Contract Performance Guarantee is without prejudice to the other rights of the Nodal Agency under this Agreement.

6.4.4 For avoidance of doubt, it is clarified that amount payable by TSP under this Article is over and above the penalty payable by TSP under Article
5.5.6 of this Agreement.

6.5 Return of Contract Performance Guarantee

6.5.1 The Contract Performance Guarantee as submitted by TSP in accordance with Article 3.1.1 shall be released by the Nodal Agency within three (3) months from the COD of the Project. In the event of delay

in achieving Scheduled COD of any of the Elements by the TSP (otherwise than due to reasons as mentioned in Article 3.1.3 or Article 11) and consequent part invocation of the Contract Performance Guarantee by the Nodal Agency, Nodal Agency shall release the Contract Performance Guarantee, if any remaining unadjusted, after the satisfactory completion by the TSP of all the requirements regarding achieving the Scheduled COD of the remaining Elements of the Project. It is clarified that the Nodal Agency shall also return / release the Contract Performance Guarantee in the event of (i) applicability of Article 3.3.2 to the extent the Contract Performance Guarantee is valid for an amount in excess of **Rs. 90 Crore (Rupees Ninety Crores Only)**. or (ii) termination of this Agreement by the Nodal Agency as mentioned under Article 3.3.4 of this Agreement.

6.5.2 The release of the Contract Performance Guarantee shall be without prejudice to other rights of the Nodal Agency under this Agreement.

ARTICLE: 7

7 OPERATION AND MAINTENANCE OF THE PROJECT

7.1 Operation and Maintenance of the Project:

The TSP shall be responsible for ensuring that the Project is operated and maintained in accordance with the regulations made by the Commission and CEA from time to time and provisions of the Act.

ARTICLE: 8

8 AVAILABILITY OF THE PROJECT

8.1 Calculation of Availability of the Project:

Calculation of Availability for the Elements and for the Project, as the case may be, shall be as per Appendix –IV to Central Electricity Regulatory Commission (Terms and Conditions of Tariff) Regulations, 2024, as applicable on the Bid Deadline and as appended in Schedule 6 of this Agreement.

8.2 Target Availability:

The Target Availability of each Element and the Project shall be 98%.

Payment of monthly Transmission charges based on actual availability will be calculated as per para 1.2 of Schedule 4 of this Agreement.

If the availability of any Element or the Project is below the Target Availability, for six consecutive months in a Contract Year, the DIC(s) or the Nodal Agency may issue a show cause notice to the TSP, asking them to show cause as to why the Transmission Service Agreement be not terminated, and if no satisfactory cause is shown it may terminate the Agreement. If the Nodal Agency is of the opinion that the transmission system is of critical importance, it may carry out or cause to carry the operation and maintenance of transmission system at the risk and cost of TSP.

CENTRAL TRANSMISSION UTILITY OF INDIA LTD.

Jam Khambhaliya Jamnagar Power Transmission Ltd. New Delhi 110003 Core-4, Scope Complex, Lodhi Road

ARTICLE: 9

9 INSURANCES

9.1 Insurance:

9.1.1 The TSP shall effect and maintain or cause to be effected and maintained during the Construction Period and the Operating Period, adequate Insurances against such risks, with such deductibles including but not limited to any third party liability and endorsements and co-beneficiary/insured, as may be necessary under

a. any of the Financing Agreements,
b. the Laws, and
c. in accordance with Prudent Utility Practices.

The Insurances shall be taken effective from a date prior to the date of the Financial Closure till the Expiry Date.

9.2 Evidence of Insurance cover:

9.2.1 The TSP shall furnish to the Nodal Agency copies of certificates and policies of the Insurances, as and when the Nodal Agency may seek from the TSP as per the terms of Article 9.1

9.3 Application of Insurance Proceeds:

9.3.1 Save as expressly provided in this Agreement, the policies of Insurances and the Financing Agreements, the proceeds of any insurance claim made due to loss or damage to the Project or any part of the Project shall be first applied to reinstatement, replacement or renewal of such loss or damage.

9.3.2 If a Natural Force Majeure Event renders the Project no longer economically and technically viable and the insurers under the Insurances make payment on a "total loss" or equivalent basis, the portion of the proceeds of such Insurance available to the TSP (after making admissible payments to the Lenders as per the Financing Agreements) shall be allocated only to the TSP. Nodal Agency and / or concerned Designated ISTS Customers shall have no claim on such proceeds of the Insurance.

9.3.3 Subject to the requirements of the Lenders under the Financing Agreements, any dispute or difference between the Parties as to whether the Project is no longer economically and technically viable due to a Force Majeure Event or whether that event was adequately covered in accordance with this Agreement by the Insurances shall be determined in accordance with Article 16.

9.4 Effect on liability of the Nodal Agency / Designated ISTS Customers

9.4.1 The Nodal Agency and / or the Designated ISTS Customers shall have no financial obligations or liability whatsoever towards the TSP in respect of this Article 9.

ARTICLE: 10

10 BILLING AND PAYMENT OF TRANSMISSION CHARGES

10.1 Subject to provisions of this Article 10, the Monthly Transmission Charges shall be paid to the TSP, in Indian Rupees, on monthly basis as per the provisions of the Sharing Regulations, from the date on which an Element(s) has achieved COD until the Expiry Date of this Agreement, unless terminated earlier and in line with the provisions of Schedule 4 of this Agreement.

10.2 Calculation of Monthly Transmission Charges:

The Monthly Transmission Charges for each Contract Year including Incentive & Penalty payment shall be calculated in accordance with the provisions of Schedule 4 of this Agreement.

10.3 Rebate & Late Payment Surcharge:

The rebate and late payment surcharge shall be governed as per Sharing regulations.

10.4 Disputed Bills, Default in payment by the Designated ISTS Customers & Annual Reconciliation:

Any Disputed Bill, Default in payment by the Designated ISTS Customers & Annual Reconciliation shall be governed as per Sharing Regulations.

ARTICLE: 11

11 FORCE MAJEURE

11.1 Definitions

11.1.1 The following terms shall have the meanings given hereunder.

11.2 Affected Party

11.2.1 An Affected Party means any Party whose performance has been affected by an event of Force Majeure.

11.2.2 Any event of Force Majeure shall be deemed to be an event of Force Majeure affecting the TSP only if the Force Majeure event affects and results in, late delivery of machinery and equipment for the Project or construction, completion, commissioning of the Project by Scheduled COD and/or operation thereafter;

11.3 Force Majeure

A 'Force Majeure' means any event or circumstance or combination of events and circumstances including those stated below that wholly or partly prevents or unavoidably delays an Affected Party in the performance of its obligations/ roles under this Agreement, but only if and to the extent that such events or circumstances are not within the reasonable control, directly or indirectly, of the Affected Party and could not have been avoided if the Affected Party had taken reasonable care or complied with Prudent Utility Practices:

(a) **Natural Force Majeure Events:**

i. act of God, including, but not limited to drought, fire and explosion (to the extent originating from a source external to the Site), earthquake, volcanic eruption, landslide, flood, cyclone, typhoon, tornado, or exceptionally adverse weather conditions, which are in excess of the statistical measures for the last hundred (100) years; and

ii. epidemic/ pandemic notified by Indian Governmental Instrumentality.

(b) **Non-Natural Force Majeure Events:**

i. Direct Non–Natural Force Majeure Events

Nationalization or compulsory acquisition by any Indian Governmental Instrumentality of any material assets or rights of the Affected Party; or

- the unlawful, unreasonable or discriminatory revocation of, or refusal to renew, any Consents, Clearances and Permits required by the Affected Party to perform their obligations/ roles under the RFP Project Documents or any unlawful, unreasonable or discriminatory refusal to grant any other Consents, Clearances and Permits required for the development/ operation of the Project, provided that a Competent Court of Law declares the revocation or refusal to be unlawful, unreasonable and discriminatory and strikes the same down; or

- any other unlawful, unreasonable or discriminatory action on the part of an Indian Governmental Instrumentality which is directed against the Project, provided that a Competent Court of Law declares the action to be unlawful, unreasonable and discriminatory and strikes the same down.

ii. Indirect Non - Natural Force Majeure Events

- act of war (whether declared or undeclared), invasion, armed conflict or act of foreign enemy, blockade, embargo, revolution, riot, insurrection, terrorist or military action; or

- radio active contamination or ionising radiation originating from a source in India or resulting from any other Indirect Non Natural Force Majeure Event mentioned above, excluding circumstances where the source or cause of contamination or radiation is brought or has been brought into or near the Site by the Affected Party or those employed or engaged by the Affected Party; or

- industry-wide strikes and labour disturbances, having a nationwide impact in India.

11.4 Force Majeure Exclusions

11.4.1 Force Majeure shall not include (i) any event or circumstance which is within the reasonable control of the Parties and (ii) the following conditions, except to the extent that they are consequences of an event of Force Majeure:

Unavailability, late delivery, or changes in cost of the machinery, equipment, materials, spare parts etc. for the Project;

(a) Delay in the performance of any Contractors or their agents;

(b) Non-performance resulting from normal wear and tear typically experienced in transmission materials and equipment;

(c) Strikes or labour disturbance at the facilities of the Affected Party;

(d) Insufficiency of finances or funds or the Agreement becoming onerous to perform; and

(e) Non-performance caused by, or connected with, the Affected Party's:

i. negligent or intentional acts, errors or omissions;

ii. failure to comply with an Indian Law; or

iii. breach of, or default under this Agreement or any Project Documents.

(f) Any error or omission in the survey report provided by BPC during the bidding process.

11.5 Notification of Force Majeure Event

11.5.1 The Affected Party shall give notice to the other Party of any event of Force Majeure as soon as reasonably practicable, but not later than seven (7) days after the date on which such Party knew or should reasonably have known of the commencement of the event of Force Majeure. If an event of Force Majeure results in a breakdown of communications rendering it unreasonable to give notice within the applicable time limit specified herein, then the Party claiming Force Majeure shall give such notice as soon as reasonably practicable after reinstatement of communications, but not later than one (1) day after such reinstatement.

Provided that, such notice shall be a pre-condition to the Affected Party's entitlement to claim relief under this Agreement. Such notice shall include full particulars of the event of Force Majeure, its effects on the Party claiming relief and the remedial measures proposed. The Affected Party shall give the other Party regular reports on the progress of those remedial measures and such other information as the other Party may reasonably request about the Force Majeure.

11.5.2 The Affected Party shall give notice to the other Party of (i) the cessation of the relevant event of Force Majeure; and (ii) the cessation of the effects of such event of Force Majeure on the performance of its rights or obligations/ roles under this Agreement, as soon as practicable after becoming aware of each of these cessations.

11.6 Duty to perform and duty to mitigate

To the extent not prevented by a Force Majeure Event, the Affected Party shall continue to perform its obligations/ roles as provided in this Agreement. The Affected Party shall use its reasonable efforts to mitigate the effect of any event of Force Majeure as soon as practicable.

CENTRAL TRANSMISSION UTILITY OF INDIA LTD. सीटीयू

Jam Khambhaliya Jamnagar Power Transmission Ltd. New Delhi 110003 Core-4, Scope Complex, Lodhi Road

11.7 Available Relief for a Force Majeure Event

Subject to this Article 11,

(a) no Party shall be in breach of its obligations/ roles pursuant to this Agreement to the extent that the performance of its obligations/ roles was prevented, hindered or delayed due to a Force Majeure Event;

(b) each Party shall be entitled to claim relief for a Force Majeure Event affecting its performance in relation to its obligations/ roles under Articles 3.3.4, 4.4.2 and 6.3.1 of this Agreement.

(c) For the avoidance of doubt, it is clarified that the computation of Availability of the Element(s) under outage due to Force Majeure Event, as per Article 11.3 affecting the TSP shall be as per Appendix –IV to Central Electricity Regulatory Commission (Terms and Conditions of Tariff) Regulations, 2024 as on Bid Deadline. For the event(s) for which the Element(s) is/are deemed to be available as per Appendix –IV to Central Electricity Regulatory Commission (Terms and Conditions of Tariff) Regulations, 2024, then the Transmission Charges, as applicable to such Element(s), shall be payable as per Schedule 4, for the duration of such event(s).

(d) For so long as the TSP is claiming relief due to any Force Majeure Event under this Agreement, the Nodal Agency may, if it so desires, from time to time on one (1) day notice, inspect the Project and the TSP shall provide the Nodal Agency's personnel with access to the Project to carry out such inspections.

(e) For avoidance of doubt, the TSP acknowledges that for extension of Scheduled COD a period up to one hundred eighty (180) days due to Force Majeure event, no compensation on the grounds such as interest cost, incident expenditure, opportunity cost will be made to the TSP. However, if Scheduled COD is extended beyond a period of one hundred eighty (180) days due to Force Majeure event, the TSP will be allowed to recover the interest cost during construction corresponding to the period exceeding one hundred eighty (180) days by adjustment in the Transmission Charges in accordance with Schedule 9.

CENTRAL TRANSMISSION UTILITY OF INDIA LTD. सीटीयू CTU

Jam Khambhaliya Jamnagar Power Transmission Ltd. New Delhi 110003 Core-4, Scope Complex, Lodhi Road

ARTICLE: 12

12 CHANGE IN LAW

12.1 Change in Law

12.1.1 Change in Law means the occurrence of any of the following after the Bid Deadline resulting into any additional recurring / non-recurring expenditure by the TSP or any savings of the TSP:

- the enactment, coming into effect, adoption, promulgation, amendment, modification or repeal (without re-enactment or consolidation) in India, of any Law, including rules and regulations framed pursuant to such Law, subject to the provisions under Article 12.1.2;
- a change in the interpretation or application of any Law by any Indian Governmental Instrumentality having the legal power to interpret or apply such Law, or any Competent Court of Law;
- the imposition of a requirement for obtaining any Consents, Clearances and Permits which was not required earlier;
- a change in the terms and conditions prescribed for obtaining any Consents, Clearances and Permits or the inclusion of any new terms or conditions for obtaining such Consents, Clearances and Permits;
- any change in the licensing regulations of the Commission, under which the Transmission License for the Project was granted if made applicable by such Commission to the TSP;
- change in wind zone; or
- any change in tax or introduction of any tax made applicable for providing Transmission Service by the TSP as per the terms of this Agreement.

12.1.2 Notwithstanding anything contained in this Agreement, Change in Law shall not cover any change:

a) Taxes on corporate income; and

b) Withholding tax on income or dividends distributed to the shareholders of the TSP.

CENTRAL TRANSMISSION UTILITY OF INDIA LTD. सीटीयू

Jam Khambhaliya Jamnagar Power Transmission Ltd. New Delhi 110003 Core-4, Scope Complex, Lodhi Road

12.2 Relief for Change in Law

12.2.1 During Construction Period, the impact of increase/decrease in the cost of the Project on the Transmission Charges shall be governed by the formula given in Schedule 9 of this Agreement.

12.2.2 During the Operation Period:

During the operation period, if as a result of Change in Law, the TSP suffers or is benefited from a change in costs or revenue, the aggregate financial effect of which exceeds 0.30% (zero point three percent) of the Annual Transmission Charges in aggregate for a Contract Year, the TSP may notify so to the Nodal Agency and propose amendments to this Agreement so as to place the TSP in the same financial position as it would have enjoyed had there been no such Change in Law resulting in change in costs or revenue as aforesaid.

12.2.3 For any claims made under Articles 12.2.1 and 12.2.2 above, the TSP shall provide to the Nodal Agency documentary proof of such increase / decrease in cost of the Project / revenue for establishing the impact of such Change in Law.

In cases where Change in Law results in decrease of cost and it comes to the notice of Nodal Agency that TSP has not informed Nodal Agency about such decrease in cost, Nodal Agency may initiate appropriate claim.

12.3 Notification of Change in Law:

12.3.1 If the TSP is affected by a Change in Law in accordance with Article 12.1 and wishes to claim relief for such Change in Law under this Article 12, it shall give notice to Nodal Agency of such Change in Law as soon as reasonably practicable after becoming aware of the same.

12.3.2 The TSP shall also be obliged to serve a notice to the Nodal Agency even when it is beneficially affected by a Change in Law.

12.3.3 Any notice served pursuant to Articles 12.3.1 and 12.3.2 shall provide, amongst other things, precise details of the Change in Law and its estimated impact on the TSP.

12.4 Payment on account of Change in Law

The payment for Change in Law shall be through a separate Bill. However, in case of any change in Monthly Transmission Charges by reason of Change in Law, as determined in accordance with this Agreement, the Bills to be raised by the Nodal Agency after such change in Transmission Charges shall appropriately reflect the changed Monthly Transmission Charges.

ARTICLE: 13

13 EVENTS OF DEFAULT AND TERMINATION

13.1 TSP's Event of Default

The occurrence and continuation of any of the following events shall constitute a TSP Event of Default, unless any such TSP Event of Default occurs as a result of any non-fulfilment of its obligations as prescribed under this Agreement by the Nodal Agency or a Force Majeure Event:

a. After having taken up the construction of the Project, the abandonment by the TSP or the TSP's Contractors of the construction of the Project for a continuous period of two (2) months and such default is not rectified within thirty (30) days from the receipt of notice from the Nodal Agency in this regard;

b. The failure to commission any Element of the Project by the date falling six (6) months after its Scheduled COD unless extended by Nodal Agency as per provisions of this Agreement;

c. If the TSP:

i. assigns, mortgages or charges or purports to assign, mortgage or charge any of its assets or rights related to the Project in contravention of the provisions of this Agreement; or

ii. transfers or novates any of its obligations pursuant to this Agreement, in a manner contrary to the provisions of this Agreement;

Except where such transfer is in pursuance of a Law and

- it does not affect the ability of the transferee to perform, and such transferee has the financial and technical capability to perform, its obligations under this Agreement;
- is to a transferee who assumes such obligations under the Project and this Agreement remains effective with respect to the transferee;

d. If:

i. The TSP becomes voluntarily or involuntarily the subject of any bankruptcy or insolvency or winding up proceedings

and such proceedings remain uncontested for a period of thirty (30) days; or

ii. any winding up or bankruptcy or insolvency order is passed against the TSP; or

iii. the TSP goes into liquidation or dissolution or a receiver or any similar officer is appointed over all or substantially all of its assets or official liquidator is appointed to manage its affairs, pursuant to Law,

Provided that a dissolution or liquidation of the TSP will not be a TSP's Event of Default, where such dissolution or liquidation of the TSP is for the purpose of a merger, consolidation or reorganization with the prior approval of the Commission as per the provisions of Central Electricity Regulatory Commission (Procedure, terms and Conditions for grant of Transmission License and other related matters) Regulations, 2006 or as amended from time to time; or

e. Failure on the part of the TSP to comply with the provisions of Article 19.1 of this Agreement; or

f. the TSP repudiates this Agreement and does not rectify such breach even within a period of thirty (30) days from a notice from the Nodal Agency in this regard; or

g. after Commercial Operation Date of the Project, the TSP fails to achieve monthly Target Availability of 98%, for a period of six
(6) consecutive months or within a non-consecutive period of six (6) months within any continuous aggregate period of eighteen (18) months except where the Availability is affected by Force Majeure Events as per Article 11; or

h. any of the representations and warranties made by the TSP in Article 17 of this Agreement being found to be untrue or inaccurate. Further, in addition to the above, any of the undertakings submitted by the Selected Bidder at the time of submission of the Bid being found to be breached or inaccurate, including but not limited to undertakings from its Parent Company / Affiliates related to the minimum equity obligation; or

i. the TSP fails to complete / fulfil all the activities / conditions within the specified period as per Article 3; or

CENTRAL TRANSMISSION UTILITY OF INDIA LTD. सीटीयू CTU

Jam Khambhaliya Jamnagar Power Transmission Ltd. Core-4, Scope Complex, Lodhi Road New Delhi 110003

j. except for the reasons solely attributable to Nodal Agency, the TSP is in material breach of any of its obligations under this Agreement and such material breach is not rectified by the TSP within thirty (30) days of receipt of notice in this regard from the Nodal Agency; or

k. the TSP fails to take the possession of the land required for location specific substations, switching stations or HVDC terminal or inverter stations and / or fails to pay the requisite price to the parties and / or any State Government authority from whom the land is acquired, within twelve (12) months from the Effective Date.

13.2 Termination Procedure for TSP Event of Default

a. Upon the occurrence and continuance of any TSP's Event of Default under Article 13.1 the Nodal Agency may serve notice on the TSP, with a copy to the CEA and the Lenders' Representative, of their intention to terminate this Agreement (a "Nodal Agency's Preliminary Termination Notice"), which shall specify in reasonable detail, the circumstances giving rise to such Nodal Agency's Preliminary Termination Notice.

b. Following the issue of a Nodal Agency's Preliminary Termination Notice, the Consultation Period shall apply and would be for the Parties to discuss as to what steps shall be taken with a view to mitigate the consequences of the relevant Event of Default having regard to all the circumstances.

c. During the Consultation Period, the Parties shall, save as otherwise provided in this Agreement, continue to perform their respective obligations/ roles under this Agreement, and the TSP shall not remove any material, equipment or any part of the Project, without prior consent of the Nodal Agency.

Following the expiry of the Consultation Period, unless the Parties shall have otherwise agreed to the contrary or the circumstances giving rise to Nodal Agency's Preliminary Termination Notice shall have ceased to exist or shall have been remedied, this Agreement may be terminated by the Nodal Agency by giving a Termination Notice to the TSP, in writing, of at least seven (7) days, with a copy to CEA and the Lenders' Representative in order to enable the Lenders to exercise right of substitution in accordance with Article 15.3 of this Agreement.

CENTRAL TRANSMISSION UTILITY OF INDIA LTD. सीटीयू

Jam Khambhaliya Jamnagar Power Transmission Ltd. New Delhi 110003 Core-4, Scope Complex, Lodhi Road

Further, the Nodal Agency may also initiate proceedings to blacklist the TSP & its Affiliates from participation in any RFP issued by BPCs for a period of 5 years.

13.3 Procedure for Nodal Agency's non-fulfilment of Role

a. Upon the Nodal Agency not being able to fulfil its role under Article 4.2, the TSP may serve notice on the Nodal Agency, with a copy to CEA and the Lenders' Representative (a "TSP's Preliminary Notice"), which notice shall specify in reasonable detail the circumstances giving rise to such non-fulfilment of role by the Nodal Agency.

b. Following the issue of a TSP's Preliminary Notice, the Consultation Period shall apply.

c. The Consultation Period would be for the Parties to discuss as to what steps shall be taken with a view to mitigate the consequences of the relevant non-fulfilment of role by the Nodal Agency including giving time extension to TSP, having regard to all the circumstances.

d. During the Consultation Period, both Parties shall, save as otherwise provided in this Agreement, continue to perform their respective obligations/ roles under this Agreement.

13.4 Termination due to Force Majeure

13.4.1 In case the Parties could not reach an agreement pursuant to Articles 3.3.4 and 4.4.2 of this Agreement and the Force Majeure Event or its effects continue to be present, the Nodal Agency shall have the right to cause termination of the Agreement. In case of such termination, the Contract Performance Guarantee shall be returned to the TSP as per the provisions of Article 6.5.1.

13.4.2 In case of termination of this Agreement, the TSP shall provide to the Nodal Agency the full names and addresses of its Contractors as well as complete designs, design drawings, manufacturing drawings, material specifications and technical information, as required by the Nodal Agency within thirty
(30) days of Termination Notice.

13.5 Termination or amendment due to non-requirement of any Element or Project during construction

13.5.1 In case any Element or Project, which is under construction, is no longer required due to any reason whatsoever, the Nodal Agency may issue a notice to this effect to the TSP.

CENTRAL TRANSMISSION UTILITY OF INDIA LTD. सीटीयू CTU

Jam Khambhaliya Jamnagar Power Transmission Ltd. New Delhi 110003 Corp. Scope Complex, Lodhi Road

13.5.2 Nodal agency may also issue notice to the TSP seeking their response to the proposed termination/ amendment (as the case may be) of the Agreement. The Nodal Agency shall issue copy of such notice to Lenders. In the notice, Nodal Agency shall also include an assessment of the physical progress made by TSP in the Element/ Project (as the case may be) that is no longer required.

13.5.3 The TSP shall neither carry out further investment nor carry out any work on the Element/ Project (as the case may be) that is no longer required after delivery of the notice.

13.5.4 After taking into account the comments of the TSP, the Nodal Agency may terminate the Agreement or amend it if both Parties agree to the amendment.

13.6 Revocation of the Transmission License

13.6.1 The Commission may, as per the provisions of the Electricity Act, 2003, revoke the Transmission License of the ISTS Licensee. Further, in such a case, the Agreement shall be deemed to have been terminated.

13.7 Termination Payment

13.7.1 If Agreement is terminated on account of Force Majeure Events, non-requirement of any Element or Project during Construction, Nodal Agency's non-fulfilment of Role & TSP's Event of Default, the TSP shall be entitled for Termination Payment equivalent to valuation of Project Assets. Upon payment, the Nodal Agency shall take over the Project Assets.

CENTRAL TRANSMISSION UTILITY OF INDIA LTD. सीटीयू

Jam Khambhaliya Jamnagar Power Transmission Ltd. New Delhi 110003 Core-4, Scope Complex, Lodhi Road

ARTICLE: 14

14 LIABILITY AND INDEMNIFICATION

14.1 Indemnity

14.1.1 The TSP shall indemnify, defend and hold the Nodal Agency harmless against:

(a) any and all third party claims, actions, suits or proceedings against the Nodal Agency for any loss of or damage to property of such third party, or death or injury to such third party, arising out of a breach by the TSP of any of its obligations under this Agreement, except to the extent that any such claim, action, suit or proceeding has arisen due to a negligent act or omission, breach of this Agreement or non- fulfilment of statutory duty on the part of Nodal Agency; and

(b) any and all losses, damages, costs and expenses including legal costs, fines, penalties and interest actually suffered or incurred by the Nodal Agency from third party claims arising by reason of:

i. a breach by the TSP of any of its obligations under this Agreement, (provided that this Article 14 shall not apply to such breaches by the TSP, for which specific remedies have been provided for under this Agreement) except to the extent that any such losses, damages, costs and expenses including legal costs, fines, penalties and interest (together to constitute "Indemnifiable Losses") has arisen due to a negligent act or omission, breach of this Agreement or non-fulfilment of statutory duty on the part of the Nodal Agency, or

ii. any of the representations and warranties of the TSP under this Agreement being found to be inaccurate or untrue.

14.1.2 The Nodal Agency shall, in accordance with the Regulations framed by CERC in this regard, indemnify, defend and hold the TSP harmless against:

(a) any and all third party claims, actions, suits or proceedings against the TSP, for any loss of or damage to property of such third party, or death or injury to such third party, arising out of any material breach by the Nodal Agency of any of their roles under this Agreement, except to the extent that any such claim, action, suit or proceeding has arisen due

CENTRAL TRANSMISSION UTILITY OF INDIA LTD. सीटीयू CTU

Jam Khambhaliya Jamnagar Power Transmission Ltd. New Delhi 110003 Core-4, Scope Complex, Lodhi Road

to a negligent act or omission, breach of this Agreement or breach of statutory duty on the part of the TSP, its Contractors, servants or agents; and

(b) any and all losses, damages, costs and expenses including legal costs, fines, penalties and interest ('Indemnifiable Losses') actually suffered or incurred by the TSP from third party claims arising by reason of:

i. any material breach by the Nodal Agency of any of its roles under this Agreement (provided that, this Article 14 shall not apply to such breaches by the Nodal Agency, for which specific remedies have been provided for under this Agreement), except to the extent that any such Indemnifiable Losses have arisen due to a negligent act or omission, breach of this Agreement or breach of statutory duty on the part of the TSP, its Contractors, servants or agents or

ii. any of the representations and warranties of the Nodal Agency under this Agreement being found to be inaccurate or untrue.

14.2 Patent Indemnity:

14.2.1

(a) The TSP shall, subject to the Nodal Agency's compliance with Article 14.2.1 (b), indemnify and hold harmless the Nodal Agency and its employees and officers from and against any and all suits, actions or administrative proceedings, claims, demands, losses, damages, costs, and expenses of whatsoever nature, including attorney's fees and expenses, which the Nodal Agency may suffer as a result of any infringement or alleged infringement of any patent, utility model, registered design, trademark, copyright or other intellectual property right registered or otherwise existing at the date of the Agreement by reason of the setting up of the Project by the TSP.

Such indemnity shall not cover any use of the Project or any part thereof other than for the purpose indicated by or to be reasonably inferred from the Agreement, any infringement resulting from the misuse of the Project or any part thereof, or any products produced in association or combination with any other equipment, plant or materials not supplied by the TSP, pursuant to the Agreement.

(b) If any proceedings are brought or any claim is made against the Nodal Agency arising out of the matters referred to in Article 14.2.1(a), the Nodal Agency shall promptly give the TSP a notice thereof, and the TSP shall at its own expense take necessary steps and attend such proceedings or claim and any negotiations for the

settlement of any such proceedings or claim. The TSP shall promptly notify the Nodal Agency of all actions taken in such proceedings or claims.

(c) If the TSP fails to notify the Nodal Agency within twenty-eight (28) days after receipt of such notice from the Nodal Agency under Article 14.2.1(b) above, that it intends to attend any such proceedings or claim, then the Nodal Agency shall be free to attend the same on their own behalf at the cost of the TSP. Unless the TSP has so failed to notify the Nodal Agency within the twenty eight (28) days period, the Nodal Agency shall make no admission that may be prejudicial to the defence of any such proceedings or claims.

(d) The Nodal Agency shall, at the TSP's request, afford all available assistance to the TSP in attending to such proceedings or claim, and shall be reimbursed by the TSP for all reasonable expenses incurred in so doing.

14.2.2

(a) The Nodal Agency, in accordance with the Regulations framed by CERC in this regard, subject to the TSP's compliance with Article 14.2.2(b) shall indemnify and hold harmless the TSP and its employees, officers from and against any and all suits, actions or administrative proceedings, claims, demands, losses, damages, costs and expenses of whatsoever nature, including attorney's fees and expenses, which the TSP may suffer as a result of any infringement or alleged infringement of any patent, utility model, registered design, trademark, copyright or other intellectual property right registered or otherwise existing at the date of the Agreement by reason of the setting up of the Project by the TSP.

(b) If any proceedings are brought or any claim is made against the TSP arising out of the matters referred to in Article 14.2.2 (a) the TSP shall promptly give the Nodal Agency a notice thereof, and the Nodal Agency shall at its own expense take necessary steps and attend such proceedings or claim and any negotiations for the settlement of any such proceedings or claim. The Nodal Agency shall promptly notify the TSP of all actions taken in such proceedings or claims.

If the Nodal Agency fails to notify the TSP within twenty-eight (28) days after receipt of such notice from the TSP under Article 14.2.2(b) above, that it intends to attend any such proceedings or claim, then the TSP shall be free to attend the same on its own behalf at the cost of the Nodal Agency. Unless the Nodal Agency has so failed to notify the TSP within the twenty (28) days period,

the TSP shall make no admission that may be prejudicial to the defence of any such proceedings or claim.

(c) The TSP shall, at the Nodal Agency request, afford all available assistance to the Nodal Agency in attending to such proceedings or claim, and shall be reimbursed by the Nodal Agency for all reasonable expenses incurred in so doing.

14.3 Monetary Limitation of liability

14.3.1 A Party ("Indemnifying Party") shall be liable to indemnify the other Party ("Indemnified Party") under this Article 14 for any Indemnity Claims made in a Contract Year only up to an amount of **Rupees Six Crores Only (Rs. 6.00 Crore).**

14.4 Procedure for claiming indemnity

14.4.1 Where the Indemnified Party is entitled to indemnification from the Indemnifying Party pursuant to Articles 14.1 or 14.2 the Indemnified Party shall promptly notify the Indemnifying Party of such claim, proceeding, action or suit referred to in Articles 14.1 or 14.2 in respect of which it is entitled to be indemnified. Such notice shall be given as soon as reasonably practicable after the Indemnified Party becomes aware of such claim, proceeding, action or suit. The Indemnifying Party shall be liable to settle the indemnification claim within thirty (30) days of receipt of the above notice.

Provided however that, if:

i. the Parties choose to contest, defend or litigate such claim, action, suit or proceedings in accordance with Article 14.4.3 below; and

ii. the claim amount is not required to be paid/deposited to such third party pending the resolution of the Dispute,

the Indemnifying Party shall become liable to pay the claim amount to the Indemnified Party or to the third party, as the case may be, promptly following the resolution of the Dispute, if such Dispute is not settled in favour of the Indemnified Party.

14.4.2 The Indemnified Party may contest, defend and litigate a claim, action, suit or proceeding for which it is entitled to be indemnified under Articles 14.1 or 14.2 and the Indemnifying Party shall reimburse to the Indemnified Party all reasonable costs and expenses incurred by the Indemnified Party. However, such Indemnified Party shall not settle or compromise such claim, action, suit or proceedings without first getting the consent of the Indemnifying Party, which consent shall not be unreasonably withheld or delayed.

14.4.3 An Indemnifying Party may, at its own expense, assume control of the

defence of any proceedings brought against the Indemnified Party if it acknowledges its obligation to indemnify such Indemnified Party, gives such Indemnified Party prompt notice of its intention to assume control of the defence, and employs an independent legal counsel at its own cost that is reasonably satisfactory to the Indemnified Party.

14.5 Limitation on Liability

14.5.1 Except as expressly provided in this Agreement, neither the TSP nor the Nodal Agency nor their respective officers, directors, agents, employees or Affiliates (including, officers, directors, agents or employees of such Affiliates), shall be liable or responsible to the other Party or its Affiliates including its officers, directors, agents, employees, successors, insurers or permitted assigns for incidental, indirect or consequential, punitive or exemplary damages, connected with or resulting from performance or non- performance of this Agreement, or anything done in connection herewith, including claims in the nature of lost revenues, income or profits (other than payments expressly required and properly due under this Agreement), any increased expense of, reduction in or loss of transmission capacity or equipment used therefore, irrespective of whether such claims are based upon breach of warranty, tort (including negligence, whether of the Nodal Agency, the TSP or others), strict liability, contract, breach of statutory duty, operation of law or otherwise.

14.5.2 The Nodal Agency shall have no recourse against any officer, director or shareholder of the TSP or any Affiliate of the TSP or any of its officers, directors or shareholders for such claims excluded under this Article. The TSP shall also have no recourse against any officer, director or shareholder of the Nodal Agency, or any Affiliate of the Nodal Agency or any of its officers, directors or shareholders for such claims excluded under this Article.

14.6 Duty to Mitigate

The party entitled to the benefit of an indemnity under this Article 14 shall take all reasonable measures to mitigate any loss or damage which has occurred. If the Party fails to take such measures, the other Party's liabilities shall be correspondingly reduced.

CENTRAL TRANSMISSION UTILITY OF INDIA LTD. सीटीयू CTU

Jam Khambhaliya Jamnagar Power Transmission Ltd. New Delhi 110003 Core-4, Scope Complex, Lodhi Road

ARTICLE: 15

15 ASSIGNMENTS AND CHARGES

15.1 Assignments:

15.1.1 This Agreement shall be binding upon, and inure to the benefit of the Parties and their respective successors and permitted assigns. This Agreement shall not be assigned by any Party, except as provided in Article 15.3.

15.2 Permitted Charges:

15.2.1 Neither Party shall create or permit to subsist any encumbrance over all or any of its rights and benefits under this Agreement.

15.2.2 However, the TSP may create any encumbrance over all or part of the receivables, or the Project Assets of the Project in favour of the Lenders or the Lenders' Representative on their behalf, as security for amounts payable under the Financing Agreements and any other amounts agreed by the Parties.

Provided that:

i. the Lenders or the Lenders' Representative on their behalf shall have entered into the Financing Agreements and agreed in writing to the provisions of this Agreement; and

ii. any encumbrance granted by the TSP in accordance with this Article 15.2.2 shall contain provisions pursuant to which the Lenders or the Lender's Representative on their behalf agrees unconditionally with the TSP to release from such encumbrances upon payment by the TSP to the Lenders of all amounts due under the Financing Agreements.

15.2.3 Article 15.2.1 does not apply to:

a. liens arising by operation of law (or by an agreement evidencing the same) in the ordinary course of the TSP developing and operating the Project;

b. pledges of goods, the related documents of title and / or other related documents, arising or created in the ordinary course of the TSP developing and operating the Project; or

c. security arising out of retention of title provisions in relation to goods acquired in the ordinary course of the TSP developing and operating the Project.

15.3 Substitution Rights of the Lenders

15.3.1 The TSP would need to operate and maintain the Project under the provisions of this Agreement and cannot assign the Transmission License or transfer the Project or part thereof to any person by sale, lease, exchange or otherwise, without the prior approval of the Nodal Agency.

15.3.2 However, in the case of default by the TSP in debt repayments or in the case of default by the TSP as per Article 13 of this Agreement during the debt repayments, the Commission may, on an application from the Lenders, assign the Transmission License to the nominee of the Lenders subject to the fulfilment of the qualification requirements and provisions of the Central Electricity Regulatory Commission (Procedure, terms and Conditions for grant of Transmission License and other related matters) Regulations, 2006 and as amended from time to time.

ARTICLE: 16

16 GOVERNING LAW AND DISPUTE RESOLUTION

16.1 Governing Law:

This Agreement shall be governed by and construed in accordance with the Laws of India. Any legal proceedings in respect of any matters, claims or disputes under this Agreement shall be under the jurisdiction of appropriate courts in Delhi.

16.2 Amicable Settlement:

16.2.1 Either Party is entitled to raise any claim, dispute or difference of whatever nature arising under, out of or in connection with this Agreement, including its existence or validity or termination or whether during the execution of the Project or after its completion and whether prior to or after the abandonment of the Project or termination or breach of the Agreement by giving a written notice to the other Party, which shall contain:

(i) a description of the Dispute;

(ii) the grounds for such Dispute; and

(iii) all written material in support of its claim.

16.2.2 The other Party shall, within thirty (30) days of issue of notice issued under Article 16.2.1, furnish:

(i) counter-claim and defences, if any, regarding the Dispute; and

(ii) all written material in support of its defences and counter-claim.

16.2.3 Within thirty (30) days of issue of notice by the Party pursuant to Article 16.2.1, if the other Party does not furnish any counter claim or defense under Article 16.2.2, or thirty (30) days from the date of furnishing counter claims or defence by the other Party, both the Parties to the Dispute shall meet to settle such Dispute amicably. If the Parties fail to resolve the Dispute amicably within thirty (30) days from the later of the dates mentioned in this Article 16.2.3, the Dispute shall be referred for dispute resolution in accordance with Article 16.3.

16.3 Dispute Resolution:

All Disputes shall be adjudicated by the Commission.

CENTRAL TRANSMISSION UTILITY OF INDIA LTD. सीटीयू

Jam Khambhaliya Jamnagar Power Transmission Ltd. New Delhi 110003 Core-4, Scope Complex, Lodhi Road

16.4 Parties to Perform Obligations:

Notwithstanding the existence of any Dispute and difference referred to the Commission as provided in Article 16.3 and save as the Commission may otherwise direct by a final or interim order, the Parties hereto shall continue to perform their respective obligations/ roles (which are not in dispute) under this Agreement.

ARTICLE: 17

17 REPRESENTATION AND WARRANTIES

17.1 Representation and warranties of the Nodal Agency

17.1.1 The Nodal Agency hereby represents and warrants to and agrees with the TSP as follows and acknowledges and confirms that the TSP is relying on such representations and warranties in connection with the transactions described in this Agreement:

a. It has all requisite powers and authority to execute and consummate this Agreement;

b. This Agreement is enforceable against the Nodal Agency in accordance with its terms;

c. The consummation of the transactions contemplated by this Agreement on the part of Nodal Agency will not violate any provision of nor constitute a default under, nor give rise to a power to cancel any charter, mortgage, deed of trust or lien, lease, agreement, license, permit, evidence of indebtedness, restriction, or other contract to which the Nodal Agency is a Party or to which the Nodal Agency is bound, which violation, default or power has not been waived;

17.2 Representation and Warranties of the TSP:

17.2.1 The TSP hereby represents and warrants to and agrees with the Nodal Agency as follows and acknowledges and confirms that the Nodal Agency is relying on such representations and warranties in connection with the transactions described in this Agreement:

a. It has all requisite powers and has been duly authorized to execute and consummate this Agreement;

b. This Agreement is enforceable against it, in accordance with its terms;

c. The consummation of the transactions contemplated by this Agreement on the part of the TSP will not violate any provision of nor constitute a default under, nor give rise to a power to cancel any charter, mortgage, deed of trust or lien, lease, agreement, license, permit, evidence of indebtedness, restriction, or other contract to which the TSP is a Party or to which the TSP is bound which violation, default or power has not been waived;

CENTRAL TRANSMISSION UTILITY OF INDIA LTD. सीटीयू

Jam Khambhaliya Jamnagar Power Transmission Ltd. New Delhi 110003 Core-4, Scope Complex, Lodhi Road

d. The TSP is not insolvent and no insolvency proceedings have been instituted, nor threatened or pending by or against the TSP;

e. There are no actions, suits, claims, proceedings or investigations pending or, to the best of the TSP's knowledge, threatened in writing against the TSP at law, in equity, or otherwise, and whether civil or criminal in nature, before or by, any court, commission, arbitrator or governmental agency or authority, and there are no outstanding judgments, decrees or orders of any such courts, commission, arbitrator or governmental agencies or authorities, which materially adversely affect its ability to execute the Project or to comply with its obligations under this Agreement.

17.2.2 The TSP makes all the representations and warranties above to be valid as on the Effective Date of this Agreement.

CENTRAL TRANSMISSION UTILITY OF INDIA LTD. सीटीयू

Jam Khambhaliya Jamnagar Power Transmission Ltd. New Delhi 110003 Core-4, Scope Complex, Lodhi Road

ARTICLE: 18

18 INDEPENDENT ENGINEER

18.1 Appointment of Independent Engineer

The Nodal Agency shall appoint an agency/ company as Independent Engineer as per framework provided in the Guidelines for Encouraging Competition in Development of Transmission Projects for selection of Independent Engineer.

18.2 Roles and functions of Independent Engineer

The role and functions of the Independent Engineer shall include the following:

a. Progress Monitoring as required under this Agreement;

b. Ensuring Quality as required under this Agreement;

c. determining, as required under the Agreement, the costs of any works or services and/or their reasonableness during construction phase;

d. determining, as required under the Agreement, the period or any extension thereof, for performing any duty or obligation during construction phase;

e. determining, as required under the Agreement, the valuation of the Project Assets.

f. Assisting the Parties in resolution of Disputes and

g. Undertaking all other duties and functions in accordance with the Agreement.

18.3 Remuneration of Independent Engineer

The fee and charges of the Independent Engineer shall be paid by the Nodal Agency as per terms & conditions of appointment.

18.4 Termination of appointment

18.4.1 The Nodal Agency may, in its discretion, terminate the appointment of the Independent Engineer at any time, but only after appointment of another Independent Engineer.

18.4.2 If the TSP has reason to believe that the Independent Engineer is not discharging its duties and functions in a fair,.efficient and diligent manner, it may make a written representation to the Nodal Agency and seek termination of the appointment of the Independent Engineer. Upon receipt of such representation, the Nodal Agency shall hold a tripartite meeting with the TSP and Independent Engineer for an amicable resolution, and the decision of Nodal agency is final. In the event that the appointment of the Independent Engineer is terminated hereunder, the Nodal Agency shall appoint forthwith another Independent Engineer.

18.5 Authorised signatories

The Nodal Agency shall require the Independent Engineer to designate and notify to the Nodal Agency up to 2 (two) persons employed in its firm to sign for and on behalf of the Independent Engineer, and any communication or document required to be signed by the Independent Engineer shall be valid and effective only if signed by any of the designated persons; provided that the Independent Engineer may, by notice in writing, substitute any of the designated persons by any of its employees.

CENTRAL TRANSMISSION UTILITY OF INDIA LTD. सीटीयू CTU

Jam Khambhaliya Jamnagar Power Transmission Ltd. New Delhi 110003 Core-4, Scope Complex, Lodhi Road

ARTICLE: 19

19 MISCELLANEOUS PROVISIONS

19.1 Equity Lock-in Commitment:

19.1.1 The aggregate equity share holding of the Selected Bidder in the issued and paid-up equity share capital of JAM KHAMBHALIYA JAMNAGAR POWER TRANSMISSION LIMITED shall not be less than Fifty one percent (51%) up to a period of one (1) year after COD of the Project.

Provided that, in case the Lead Member or Bidding Company is holding equity through Affiliate/s, Ultimate Parent Company or Parent Company, such restriction as specified above shall apply to such entities.

Provided further, that in case the Selected Bidder is a Bidding Consortium, the Lead Member shall continue to hold equity of at least twenty six percent (26%) upto a period of one (1) year after COD of the Project and any Member of such Bidding Consortium shall be allowed to divest its equity as long as the other remaining Members (which shall always include the Lead Member) hold the minimum equity specified above.

19.1.2 If equity is held by the Affiliates, Parent Company or Ultimate Parent Company of the Selected Bidder, then, subject to the second proviso to Article 19.1.1, such Affiliate, Parent Company or Ultimate Parent Company shall be eligible to transfer its shareholding in JAM KHAMBHALIYA JAMNAGAR POWER TRANSMISSION LIMITED to another Affiliate or to the Parent Company / Ultimate Parent Company of the Selected Bidder. If any such shareholding entity, qualifying as an Affiliate / Parent Company / Ultimate Parent Company, is likely to cease to meet the criteria to qualify as an Affiliate / Parent Company / Ultimate Parent Company, the shares held by such entity shall be transferred to another Affiliate / Parent Company / Ultimate Parent Company of the Selected Bidder.

19.1.3 Subject to Article 19.1.1, all transfer(s) of shareholding of JAM KHAMBHALIYA JAMNAGAR POWER TRANSMISSION LIMITED by any of the entities referred to in Article 19.1.1 and 19.1.2 above, shall be after prior written intimation to the Nodal Agency

19.1.4 For computation of effective Equity holding, the Equity holding of the Selected Bidder or its Ultimate Parent Company in such Affiliate(s) or Parent Company and the equity holding of such Affiliate(s) or Ultimate Parent Company in JAM KHAMBHALIYA JAMNAGAR POWER TRANSMISSION LIMITED shall be computed in accordance with the example given below:

CENTRAL TRANSMISSION UTILITY OF INDIA LTD. सीटीयू

Jam Khambhaliya Jamnagar Power Transmission Ltd. Core-4, Scope Complex, Lodhi Road New Delhi 110003

If the Parent Company or the Ultimate Parent Company of the Selected Bidder A directly holds thirty percent (30%) of the equity in JAM KHAMBHALIYA JAMNAGAR POWER TRANSMISSION LIMITED then holding of Selected Bidder A in JAM KHAMBHALIYA JAMNAGAR POWER TRANSMISSION LIMITED shall be thirty percent (30%);

If Selected Bidder A holds thirty percent (30%) equity of the Affiliate and the Affiliate holds fifty percent (50%) equity in JAM KHAMBHALIYA JAMNAGAR POWER TRANSMISSION LIMITED, then, for the purposes of ascertaining the minimum equity/equity lock-in requirements specified above, the effective holding of Bidder A in JAM KHAMBHALIYA JAMNAGAR POWER TRANSMISSION LIMITED shall be fifteen percent (15%), (i.e., 30% x 50%)

19.1.5 The provisions as contained in this Article 19.1 shall override the terms of the consortium agreement submitted as part of the Bid.

19.1.6 The TSP shall be responsible to report to Nodal Agency, within thirty (30) days from the occurrence of any event that would result in any change in its equity holding structure from that which existed as on the date of signing of the Share Purchase Agreement. In such cases, the Nodal Agency would reserve the right to ascertain the equity holding structure and to call for all such required documents / information / clarifications as may be required.

19.2 Commitment of maintaining Qualification Requirement

19.2.1 The Selected Bidder will be required to continue to maintain compliance with the Qualification Requirements, as stipulated in RFP Document, till the COD of the Project. Where the Technically Evaluated Entity and/or the Financially Evaluated Entity is not the Bidding Company or a Member in a Bidding Consortium, as the case may be, the Bidding Company or Member shall continue to be an Affiliate of the Technically Evaluated Entity and/or Financially Evaluated Entity till the COD of the Project.

19.2.2 Failure to comply with the aforesaid provisions shall be dealt in the same manner as TSP's Event of Default as under Article 13 of this Agreement.

19.3 Language:

19.3.1 All agreements, correspondence and communications between the Parties relating to this Agreement and all other documentation to be prepared and supplied under the Agreement shall be written in English, and the Agreement shall be construed and interpreted in accordance with English language.

19.3.2 If any of the agreements, correspondence, communications or documents

are prepared in any language other than English, the English translation of such agreements, correspondence, communications or documents shall prevail in matters of interpretation.

19.4 Affirmation

The TSP and the Nodal Agency, each affirm that:

1. neither it nor its respective directors, employees, or agents has paid or undertaken to pay or shall in the future pay any unlawful commission, bribe, pay-off or kick-back; and

2. it has not in any other manner paid any sums, whether in Indian currency or foreign currency and whether in India or abroad to the other Party to procure this Agreement, and the TSP and the Nodal Agency hereby undertake not to engage in any similar acts during the Term of Agreement.

19.5 Severability

The invalidity or enforceability, for any reason, of any part of this Agreement shall not prejudice or affect the validity or enforceability of the remainder of this Agreement, unless the part held invalid or unenforceable is fundamental to this Agreement.

19.6 Counterparts

This Agreement may be executed in one or more counterparts, each of which shall be deemed an original and all of which collectively shall be deemed one and the same Agreement.

19.7 Breach of Obligations/ Roles

The Parties acknowledge that a breach of any of the obligations/ roles contained herein would result in injuries. The Parties further acknowledge that the amount of the liquidated damages or the method of calculating the liquidated damages specified in this Agreement is a genuine and reasonable pre-estimate of the damages that may be suffered by the non-defaulting Party in each case specified under this Agreement.

19.8 Restriction of Shareholders / Owners Liability

19.8.1 Parties expressly agree and acknowledge that none of the shareholders of the Parties hereto shall be liable to the other Parties for any of the contractual obligations of the concerned Party under this Agreement.

19.8.2 Further, the financial liabilities of the shareholder(s) of each Party to this Agreement shall be restricted to the extent provided in the Indian Companies Act, 1956 / Companies Act, 2013 (as the case may be).

19.9 Taxes and Duties:

19.9.1 The TSP shall bear and promptly pay all statutory taxes, duties, levies and cess, assessed/levied on the TSP, its Contractors or their employees that are required to be paid by the TSP as per the Law in relation to the execution of the Project and for providing Transmission Service as per the terms of this Agreement.

19.9.2 The Nodal Agency shall be indemnified and held harmless by the TSP against any claims that may be made against the Nodal Agency in relation to the matters set out in Article 19.9.1.

19.9.3 The Nodal Agency shall not be liable for any payment of, taxes, duties, levies, cess whatsoever for discharging any obligation of the TSP by the Nodal Agency on behalf of TSP or its personnel, provided the TSP has consented in writing to the Nodal Agency for such work, for which consent shall not be unreasonably withheld.

19.10 No Consequential or Indirect Losses

The liability of the TSP shall be limited to that explicitly provided in this Agreement.

Provided that, notwithstanding anything contained in this Agreement, under no event shall the Nodal Agency or the TSP claim from one another any indirect or consequential losses or damages.

19.11 Discretion:

Except where this Agreement expressly requires a Party to act fairly or reasonably, a Party may exercise any discretion given to it under this Agreement in any way it deems fit.

19.12 Confidentiality

19.12.1 The Parties undertake to hold in confidence this Agreement and RFP Project Documents and not to disclose the terms and conditions of the transaction contemplated hereby to third parties, except:

(a) to their professional advisors;

(b) to their officers, contractors, employees, agents or representatives, financiers, who need to have access to such information for the proper performance of their activities; or

(c) disclosures required under Law,

without the prior written consent of the other Parties.

Provided that, the TSP agrees and acknowledges that the Nodal Agency,

may, at any time, disclose the terms and conditions of the Agreement and the RFP Project Documents to any person, to the extent stipulated under the Law and the Competitive Bidding Guidelines.

19.13 Order of priority in application:

Save as provided in Article 2.5, in case of inconsistencies between the terms and conditions stipulated in Transmission License issued by the Commission to the TSP, agreement(s) executed between the Parties, applicable Law including rules and regulations framed thereunder, the order of priority as between them shall be the order in which they are placed below:

- terms and conditions of Transmission License;
- applicable Law, rules and regulations framed thereunder;
- this Agreement;
- Agreement(s), if any, under Sharing Regulations.

19.14 Independent Entity:

19.14.1 The TSP shall be an independent entity performing its obligations pursuant to the Agreement.

19.14.2 Subject to the provisions of the Agreement, the TSP shall be solely responsible for the manner in which its obligations under this Agreement are to be performed. All employees and representatives of the TSP or Contractors engaged by the TSP in connection with the performance of the Agreement shall be under the complete control of the TSP and shall not be deemed to be employees, representatives, Contractors of the Nodal Agency and nothing contained in the Agreement or in any agreement or contract awarded by the TSP shall be construed to create any contractual relationship between any such employees, representatives or Contractors and the Nodal Agency.

19.15 Amendments:

19.15.1 This Agreement may only be amended or supplemented by a written agreement between the Parties.

19.16 Waiver:

19.16.1 No waiver by either Party of any default or breach by the other Party in the performance of any of the provisions of this Agreement shall be effective unless in writing duly executed by an authorised representative of such Party.

19.16.2 Neither the failure by either Party to insist on any occasion upon the performance of the terms, conditions and provisions of this Agreement nor time or other indulgence granted by one Party to the other Parties

shall act as a waiver of such breach or acceptance of any variation or the relinquishment of any such right or any other right under this Agreement, which shall remain in full force and effect.

19.17 Relationship of the Parties:

This Agreement shall not be interpreted or construed to create an association, joint venture, or partnership or agency or any such other relationship between the Parties or to impose any partnership obligation or liability upon either Party and neither Party shall have any right, power or authority to enter into any agreement or undertaking for, or act on behalf of, or to act as or be an agent or representative of, or to otherwise bind, the other Party.

19.18 Entirety:

19.18.1 This Agreement along with its sections, schedules and appendices is intended by the Parties as the final expression of their agreement and is intended also as a complete and exclusive statement of the terms of their agreement.

19.18.2 Except as provided in this Agreement, all prior written or oral understandings, offers or other communications of every kind pertaining to this Agreement or the provision of Transmission Service under this Agreement to the Nodal Agency by the TSP shall stand superseded and abrogated.

19.19 Notices:

19.19.1 All notices or other communications which are required to be given under this Agreement shall be in writing and in the English language

19.19.2 If to the TSP, all notices or communications must be delivered personally or by registered post or facsimile or any other mode duly acknowledged to the addressee below:

(i) M/s Ceigall India Limited (Selected Bidder)

Address : Plot No. 70, Institutional Area, Sector 32, Gurugram - 122001, Haryana.

Attention : Mr. A. SARAVANAN

Email : president@ceigall.com

Fax. No. :

Telephone No. : 0124-4206978

19.19.3 If to the Nodal Agency, all notices or communications must be delivered personally or by registered post or facsimile or any other mode duly acknowledged to the addresses below:

CENTRAL TRANSMISSION UTILITY OF INDIA LTD. सीटीयू

Jam Khambhaliya Jamnagar Power Transmission Ltd. New Delhi 110003 Corner, Scope Complex, Lodhi Road

(i) **Central Transmission Utility of India Limited (Nodal Agency)**

Address	: 5th to 10th Floor, IRCON International Tower, Tower no-1, Plot no-16, Sector-32, Gurugram, Haryana: 122003
Attention	: Ramachandra, Sr GM
Email	: ramachand@powergrid.in
Fax. No.	:
Telephone No.	: 9910378128

19.19.4 All notices or communications given by facsimile shall be confirmed by sending a copy of the same via post office in an envelope properly addressed to the appropriate Party for delivery by registered mail. All notices shall be deemed validly delivered upon receipt evidenced by an acknowledgement of the recipient, unless the Party delivering the notice can prove in case of delivery through the registered post that the recipient refused to acknowledge the receipt of the notice despite efforts of the postal authorities.

19.19.5 Any Party may by notice of at least fifteen (15) days to the other Party change the address and/or addresses to which such notices and communications to it are to be delivered or mailed.

19.20 Fraudulent and Corrupt Practices

19.20.1 The TSP and its respective officers, employees, agents and advisers shall observe the highest standard of ethics during the subsistence of this Agreement. Notwithstanding anything to the contrary contained in the Agreement, the Nodal Agency may terminate the Agreement without being liable in any manner whatsoever to the TSP, if it determines that the TSP has, directly or indirectly or through an agent, engaged in corrupt practice, fraudulent practice, coercive practice, undesirable practice or restrictive practice in the Bid process. In such an event, the Nodal Agency shall forfeit the Contract Performance Guarantee of the TSP, without prejudice to any other right or remedy that may be available to the Nodal Agency hereunder or subsistence otherwise.

19.20.2 Without prejudice to the rights of the Nodal Agency under Clause 19.20.1 hereinabove and the rights and remedies which the Nodal Agency may have under this Agreement, if a TSP is found by the Nodal Agency to have directly or indirectly or through an agent, engaged or indulged in any corrupt practice, fraudulent practice, coercive practice, undesirable practice or restrictive practice during the Bid process, or after the issue of Letter of Intent (hereinafter referred to as LoI) or after the execution of the agreement(s) required under Sharing Regulations, the Nodal Agency may terminate the Agreement without being liable in any manner whatsoever to the TSP. Further, the TSP & its Affiliates shall not be eligible to participate in any tender or RFP issued by any BPC for an

indefinite period from the date such TSP is found by the Nodal Agency to have directly or indirectly or through an agent, engaged or indulged in any corrupt practice, fraudulent practice, coercive practice, undesirable practice or restrictive practices, as the case may be.

19.20.3 For the purposes of this Clause 19.20, the following terms shall have the meaning hereinafter respectively assigned to them:

(a) **"corrupt practice"** means (i) the offering, giving, receiving, or soliciting, directly or indirectly, of anything of value to influence the actions of any person connected with the Bid process (for avoidance of doubt, offering of employment to or employing or engaging in any manner whatsoever, directly or indirectly, any official of the BPC who is or has been associated or dealt in any manner, directly or indirectly with the Bid process or the LoI or has dealt with matters concerning the RFP Project Documents or arising there from, before or after the execution thereof, at any time prior to the expiry of one year from the date such official resigns or retires from or otherwise ceases to be in the service of the BPC, shall be deemed to constitute influencing the actions of a person connected with the Bid Process); or (ii) engaging in any manner whatsoever, whether during the Bid Process or after the issue of the LoI or after the execution of the RFP Project Documents, as the case may be, any person in respect of any matter relating to the Project or the LoI or the RFP Project Documents, who at any time has been or is a legal, financial or technical adviser of the BPC in relation to any matter concerning the Project;

(b) "**fraudulent practice**" means a misrepresentation or omission of facts or suppression of facts or disclosure of incomplete facts, in order to influence the Bid process;

(c) "**coercive practice**" means impairing or harming, or threatening to impair or harm, directly or indirectly, any person or property to influence any person's participation or action in the Bid process;

"**undesirable practice**" means (i) establishing contact with any person connected with or employed or engaged by the BPC with the objective of canvassing, lobbying or in any manner influencing or attempting to influence the Bid process; or (ii) having a Conflict of Interest; and

(d) "**restrictive practice**" means forming a cartel or arriving at any understanding or arrangement among Bidders with the objective of restricting or manipulating a full and fair competition in the Bid process;

19.21 Compliance with Law:

Despite anything contained in this Agreement but without prejudice to Article 12, if any provision of this Agreement shall be in deviation or inconsistent with or repugnant to the provisions contained in the Electricity Act, 2003, or any rules and regulations made there under, such provision shall be deemed to be amended to the extent required to bring it into compliance with the aforesaid relevant provisions as amended from time to time.

WITNESS WHEREOF, THE PARTIES HAVE CAUSED THIS AGREEMENT TO BE EXECUTED BY THEIR DULY AUTHORISED REPRESENTATIVES AS OF THE DATE AND PLACE SET FORTH ABOVE.

1. For and on behalf of TSP

A. SARAVANAN, CFO

Jam Khambhaliya Jamnagar Power Transmission Ltd
New Delhi
110003
Grand Scope Complex, Lodhi Road

[Signature, Name, Designation and Address]

2. For and on behalf of Central Transmission Utility of India Limited (Nodal Agency)

[Signature, Name, Designation and Address]

KAMAL KUMAR JAIN
Senior General Manager
सेंट्रल ट्रांसमिशन यूटिलिटी ऑफ इंडिया लिमिटेड
CENTRAL TRANSMISSION UTILITY OF INDIA LIMITED
(पावर ग्रिड कार्पोरेशन ऑफ इंडिया लिमिटेड की पूर्ण स्वामित्व कंपनी)
(A wholly owned subsidiary of POWERGRID)
5th-10th Floor, Ircon International Tower-1, Plot No.-16, Sector-32, Gurugram-122003

WITNESS:

1. For and on behalf of

BPC

[Signature, Name, Designation and Address]

(RITAM BISWAS)
DY. MANAGER (BNGS.), RECPDCL

2. For and on behalf of

Central Transmission Utility of India Limited (Nodal Agency)

[Signature, Name, Designation and Address]

DEEPAK KRISHNAN
Chief Manager
सेंट्रल ट्रांसमिशन यूटिलिटी ऑफ इंडिया लिमिटेड
CENTRAL TRANSMISSION UTILITY OF INDIA LIMITED
(पावर ग्रिड कॉर्पोरेशन ऑफ इंडिया लिमिटेड की पूर्ण स्वामित्व कंपनी)
(A wholly owned subsidiary of POWERGRID)
5th-10th Floor, Ircon International Tower-1, Plot No.-16, Sector-32, Gurugram-122003

SCHEDULES

Schedule: 1

Project Description and Scope of Project

Scope of the Project:

Sl. No.	Scope of the Transmission Scheme	Scheduled COD in months from Effective Date
1.	Establishment of 765/400 kV, 3x1500 MVA & 400/220 kV, 3x500 MVA Nasik S/s (towards South of Nasik) with 2x330 MVAr 765 kV bus reactor and 2x125 MVAr 400 kV bus reactor. • 765/400 kV, 1500 MVA ICT – 3 Nos. (10x500 MVA single phase units including one spare ICT Unit) • 400/220 kV ICTs - 3 Nos. • 765 kV ICT bays – 3 Nos. • 400 kV ICT bays –6 Nos. • 220 kV ICT bays – 3 Nos. • 765 kV Line bays – 2 Nos. • 1x330 MVAr, 765 kV bus reactor- 2 Nos. (7x110 MVAr single phase Reactors including one spare Unit for bus /line reactor) • 765 kV Bus reactor bay – 2 Nos. • 220 kV BC– 1 No. • 220 kV TBC – 1 No. • 125 MVAr, 420 kV Bus Reactor- 2 Nos. • 400 kV Bus Reactor bay- 2 Nos. • 400 kV line bays - 2 Nos. • 220 kV line bays - 6 Nos. (for MSETCL 220 kV lines: Adwadi 220 kV D/C, Nasik GCR 220 kV D/C & Nasik OCR 220 kV D/C) **Future provision (space for):** • 765/400 kV, 1500 MVA ICT along with bays- 3 Nos. (on Sec-II) • 765 kV line bays along with switchable line reactors – 10 Nos. (4 Nos. on Sec-I & 6 Nos. on Sec-II) • 765 kV, 330 MVAr Bus Reactor along with bay: 2 Nos. (on Sec-II) • 765 kV Sectionaliser bay: 1 -set • 400 kV Sectionaliser bay: 1- set • 400/220 kV, 500 MVA ICT along with bays - 7 Nos. (2 on Sec-I & 5 on Sec-II) • 400 kV line bays along with Switchable Line Reactors– 10 Nos. (4 on Sec-I & 6 on Sec-II) • 420 kV, 125 MVAr Bus Reactor along with bays: 2 Nos.	36 months (19.10.2029)

Sl. No.	Scope of the Transmission Scheme	Scheduled COD in months from Effective Date
	(on Sec-II) • 220 kV Sectionaliser bay: 1- set • 220 kV BC & TBC – 1 No. each • 220 kV line bays: 2 No. on Sec-I & 8 Nos. on Section-II	
2.	South Olpad (GIS) – Nasik 765 kV D/C line	
3.	2 Nos. 765 kV line bays at South Olpad (GIS) S/s (Sec-II) for South Olpad – Nasik 765 kV D/C line • 765 kV line bays – 2 Nos. (GIS) (Sec-II) along with 1 set of 765 kV sectionaliser bay so as to establish 765 kV Sec-II.	
4.	765 kV, 240 MVAr Switchable line reactors on each circuit at both ends of South Olpad – Nasik 765kV D/C line • 240 MVAr, 765 kV Switchable Line Reactor- 4 Nos. (2 for South Olpad end and 2 for Nasik end) • 765 kV Switchable Line Reactor bay - 4 Nos. (2 for South Olpad end and 2 for Nasik end) • 80 MVAr spare single-phase reactor at Nasik for above 240 MVAr switchable LR. • 80 MVAr spare single-phase reactor at South Olpad S/s is already available and same shall be used for subject Switchable LR.	
5.	Nasik – Pimpalgaon (MSETCL) 400 kV D/C line (Quad ACSR/AAAC/AL59 moose equivalent)	
6.	2 Nos. 400 kV line bays at Pimpalgaon (GIS) S/s for Nasik – Pimpalgaon (MSETCL) 400 kV D/C line (Quad ACSR/AAAC/AL59 moose equivalent) • 400 Kv GIS line bays – 2 Nos.	

Note:

a) *Bay(s) required for completion of diameter (GIS) in one-and-half breaker scheme shall also be executed by the TSP.*
b) *TSP of South Olpad (GIS) to provide space for above scope of work (Free of cost)*
c) *MSETCL to provide space for above scope of work at Pimpalgaon (GIS) S/s (Free of cost)*
d) *MSETCL to implement 220 kV downstream system from Nasik S/s in matching time-frame.*

Project Description

Govt. of India has set a target for establishing 500 GW capacity from non-fossil energy sources by 2030. Jam Khambhaliya REZ - Phase II (5500 MW), Jamnagar Phase-I (1000 MW) and Lakadia REZ - Phase II (7500 MW) in Gujarat have been planned to enable immediate interconnection facility to RE projects in respective areas.

However, for onward evacuation of power from the above areas, a Common Transmission System has been planned for dispersal of above RE power towards load centers in South Gujarat and Maharashtra.

In view of the above, transmission scheme for onward evacuation of cumulative capacity of 14 GW power from various RE Projects in Dwarka/Jamnagar and Lakadia areas in Gujarat namely **"Common Transmission System for evacuation of power from Lakadia (Phase-II: 7.5GW), Jam Khambhaliya (Phase-II: 5.5GW) and Jamnagar (Phase-I: 1GW)" Parts A, B & C** were taken up for deliberations in the 37th NCT meeting held on 19.01.2026.

The subject Transmission scheme **"Common Transmission System for evacuation of power from Lakadia (Phase-II: 7.5 GW), Jam Khambhaliya (Phase-II: 5.5 GW) and Jamnagar (Phase-I: 1 GW) - Part B"** inter-alia includes establishment of 765/400 kV, 3x1500 MVA and 400/220 kV, 3x500 MVA Nasik S/s (towards South of Nasik), South Olpad (GIS) – Nasik 765 kV D/C line and Nasik – Pimpalgaon (MSETCL) 400 kV D/C line. Further, Common Transmission System for evacuation of power from Lakadia (Phase-II: 7.5 GW), Jam Khambhaliya (Phase-II: 5.5 GW) and Jamnagar (Phase-I: 1 GW)" Parts A & C shall also be required along with this scheme.

The subject Transmission system was recommended by NCT in the 37th NCT meeting held on 19.01.2026. Further, Ministry of Power vide Gazette notification dated 12.02.2026 has approved this Transmission scheme for implementation through TBCB mode and appointed RECPDCL as BPC.

SPECIFIC TECHNICAL REQUIREMENTS FOR TRANSMISSION LINE

The design, routing and construction of transmission lines shall be in accordance with Chapter V, Part A of CEA (Technical Standards for Construction of Electrical Plants and Electric Lines) Regulations 2022, as amended from time to time. Other CEA Regulations/ guidelines as amended up to date and Ministry of Power (MoP) guidelines, as applicable, shall also be followed.

A.1.0 Selection of tower type shall be made as per CEA Regulations, however, in case lattice type towers are used, the following shall also be applicable:

A.2.0 Steel section of grade E 250 and/or grade E 350 as per IS 2062, only are permitted for use in towers, extensions, gantry structures and stub setting templates. For towers in snowbound areas, steel sections shall conform to Grade-C of IS-2062.

A.3.0 Towers shall be designed as per IS-802:2015, however the drag coefficient of the tower shall be as follows: -

Solidity Ratio	Drag Coefficient
Up to 0.05	3.6
0.1	3.4
0.2	2.9
0.3	2.5
0.4	2.2
0.5 and above	2.0

A.4.0 Transmission Service Provider (TSP) shall adopt any additional loading/design criteria for ensuring reliability of the line, if so desired and /or deemed necessary.

A.5.0 Transmission line shall be designed considering wind zones as specified in wind map given in National Building Code 2016, Vol.1. The developer shall also make his own assessment of local wind conditions and frequent occurrences of High Intensity Winds (HIW) due to thunderstorms, dust storms, downburst etc. along the line route and wherever required, higher wind zone than that given in wind map shall be considered for tower design for ensuring reliability of line. Further, for transmission line sections passing within a distance of 50 km from the boundary of two wind zones, higher of the two wind zones shall be considered for design of towers located in such sections.

A.6.0 Selection of reliability level for design of tower shall be as per CEA Regulation (Technical Standards for Construction of Electrical Plants and Electric Lines) Regulations 2022, as amended from time to time.

A.7.0

a) In case of construction of transmission line of Voltage level of 400 kV and above, under crossing of the existing transmission line shall not be

allowed. In the case where it is inevitable to under-cross the existing transmission line then TSP shall seek prior approval from Chief Electrical Inspector, CEA with detailed study ensuring that all statutory electrical clearances and Electric Field limit of 10 kV/m at 1 m and 1.8 m from ground level is not violated.

b) For power line crossing of 400 kV or above voltage level, large angle and dead end towers (i.e. D/DD/QD) shall be used on either side of power line crossing.

c) For power line crossing of 132 kV and 220 kV (or 230 kV) voltage level, angle towers (B/C/D/DB/DC/DD/ QB/QC/QD) shall be used on either side of power line crossing depending upon the merit of the prevailing site condition and line deviation requirement.

d) For power line crossing of 66 kV and below voltage level, suspension/tension towers shall be provided on either side of power line crossing depending upon the merit of the prevailing site condition and line deviation requirement.

e) For crossing of railway tracks, national highways and state highways, the rules/ regulations of appropriate authorities shall be followed.

A.8.0 The relevant conductor configuration shall be as follows: -

A. For South Olpad (GIS) – Nasik 765kV D/C line

Type of conductor: ACSR / AAAC / AL59

Basic Parameters:

Transmission line	**ACSR Conductor specified**	**Equivalent AAAC conductor based on 53.5% conductivity of Al Alloy**	**Equivalent minimum size of AL59 conductor based on 59% conductivity of AL Alloy***	**Sub-conductor Spacing**
765 kV D/C (Hexa Bundle) Transmission Lines	**Zebra : Stranding** 54/3.18 mm-Al + 7/3.18 mm-Steel, 428.9 mm^2, Aluminium area,	**Stranding details:** 61/3.19 mm, 487.5 mm^2 Aluminium alloy area 28.71 mm diameter	**Stranding details:** 61/3.08 mm, 454 mm^2 Aluminium alloy area 27.72 mm diameter	457 mm

	28.62 mm diameter Maximum DC Resistance at 20°C (Ω/km): 0.0677 Minimum UTS: 131.44 kN	Maximum DC Resistance at 20°C (Ω/km): 0.06815 Minimum UTS: 135.6 kN	Maximum DC Resistance at 20°C (Ω/km): 0.0653 Minimum UTS: 108 kN	

B. For Nasik – Pimpalgaon (MSETCL) 400kV D/C line

Type of conductor: ACSR / AAAC / AL59

Basic Parameters:

Transmission line	**ACSR Conductor specified**	**Equivalent AAAC conductor based on 53% conductivity of Al Alloy**	**Equivalent minimum size of AL59 conductor based on 59% conductivity of AL Alloy***	**Sub-conductor Spacing**
400 kV D/C (Quad Bundle) Transmission Lines	**Moose: Stranding** 54/3.53mm-Al + 7/3.53 mm- Steel, 31.77 mm diameter 528.5 mm², Aluminium area, Maximum DC Resistance at 20°C (Ω/km): 0.0549 Minimum UTS: 159.60 kN	**Stranding details:** 61/3.55mm 31.95mm diameter; 604 mm² Aluminium alloy area Maximum DC Resistance at 20°C (Ω/km): 0.05506 Minimum UTS: 159.80 kN	**Stranding details:** 61/3.31mm 29.79 mm diameter; 525 mm² Aluminium alloy area Maximum DC Resistance at 20°C (Ω/km): 0.0566 Minimum UTS: 124.70 kN	457 mm

Note:

1. **To select any size above the minimum, the sizes mentioned in the Indian standard IS-398 (part-6) shall be followed.*
2. *The transmission lines shall have to be designed for a maximum operating conductor temperature of 85 ^{O}C.*

A.9.0 The required phase to phase spacing and horizontal spacing for 765 kV and 400 kV line(s) shall be governed by the tower design as well as minimum live metal clearances for 765 kV and 400 kV voltage level under different insulator swing angles. However, the phase to phase spacing for 765 kV line shall not be less than 15 m and for 400 kV line shall not be less than 8 m.

A.10.0 All electrical clearances including minimum live metal clearance, ground clearance and minimum mid span separation between earth wire and conductor as given below shall be considered:

I. Minimum live metal clearances for 765 kV line:

(i) Under stationary conditions

From tower body: For 765 kV D/C: 6.1 m

For 765 kV S/C: 5.6 m

(ii) Under swing conditions

Wind Pressure Condition	Minimum Electrical Clearance
a) Swing angle (25º)	4.4 m
b) Swing angle (55º)	1.3 m

(iii) Minimum ground clearance for 765 kV line: 18 m

(iv) Minimum mid span separation between earth-wire and conductor for 765 kV line: 9.0 m

II. Minimum live metal clearances for 400 kV line:

(i) Under stationary conditions

From tower body: 3.05 m

(ii) Under swing conditions

Wind pressure Condition	Minimum electrical clearance
a) Swing angle (22º)	3.05 m
b) Swing angle (44º)	1.86 m

(iii) Minimum ground clearance for 400 kV line: 8.84 m

(iv) Minimum mid span separation between earth-wire and conductor for 400 kV line: 9.0 m

A.11.0 Shielding angle shall not exceed 10 deg for 765 kV D/C and 20 deg for 400

kV D/C Line transmission line.

A.12.0 The Fault current for design of line shall be 50 kA for 1 sec for 765 kV and 63 kA for 1 sec for 400 kV.

A.13.0 In case of 400 kV and above voltage class lines, at least one out of two earth wires shall be OPGW and second earth wire, if not OPGW, shall be either of Galvanized Stranded Steel (GSS) or Aluminum Alloy Conductor Steel Reinforced (AACSR) conductor type or any other suitable conductor type depending upon span length and other technical consideration.

A.14.0 Each tower shall be earthed such that tower footing impedance does not exceed 10 ohms. Pipe type or Counterpoise type earthing shall be provided in accordance with relevant IS. Additional earthing shall be provided on every 7 to 8 km distance for direct earthing of both shield wires. If site condition demands, multiple earthing or use of earthing enhancement compound shall be used.

A.15.0 Pile type foundation shall be used for towers located in river or creek bed or on bank of river having scourable strata or in areas where river flow or change in river course is anticipated, based on detailed soil investigation and previous years' maximum flood discharge of the river, maximum velocity of water, highest flood level, scour depth and anticipated change in course of river based on river morphology data of at least past 20 years to ensure availability and reliability of the transmission line.

A.16.0 Transmission line route shall be finalized, in consultation with appropriate authorities so as to avoid the habitant zones of endangered species and other protected species. Bird diverters, wherever required, shall be provided on the transmission line. In order to optimize the route, use of GATISHAKTI platform shall also be made.

A.17.0 Wherever, transmission lines are passing through cyclone prone areas i.e., areas up to 60 km from coast following shall also be applicable:

a) Terrain category-I, with terrain roughness factor (K2) of 1.08 shall be considered for tower design for exposed open terrain with few or no obstruction, which also includes open sea coasts, open stretch of water, desert and flat treeless plains.

b) Importance factor for cyclonic region (K4) of 1.3 shall be considered for tower design.

c) The number of consecutive spans between the section points/ angle point shall not exceed 10 spans or 3 km instead of conventional practice of 15 spans or 5 km, in order to reduce the failure of such towers in coastal areas due to cascading effect. The section shall be terminated with tension tower/ angle tower and angle of deviation should be based on the site requirement.

A.18.0 Wherever, transmission lines are passing through cyclone prone areas (i.e. areas up to 60 km from coast)/ creek regions/ aggressive soil areas following

shall also be applicable:

a) The fabricated tower parts and stubs shall have a minimum overall zinc coating of 900 g/m^2 of surface area except for plates and sections below 5 mm which shall have a minimum overall zinc coating of 610 g/m^2 of surface area. The average zinc coating for all sections and plates 5 mm and above shall be maintained as 127 microns and that for plates and sections below 5 mm shall be maintained as 87 microns.

b) Ready mix concrete of M30 Grade shall be used to avoid use of locally available saline water. However, design mix concrete of M30 Grade conforming to IS 456 with potable water can be used at locations where transportation of ready-mix concrete is not feasible. Minimum cement content in any case shall not be less than 330 kg/m^3.

c) The surface of the reinforced steel shall be treated with epoxy-based coating to enhance corrosion performance of foundation. Use of epoxy coated reinforcement in foundation shall be as per IS 13620. In addition, two (2) coats of bituminous painting of minimum 1.6 kg/m^2 per coat shall be applied on all exposed faces of foundation (i.e. pedestal and base slab).

d) Double coat 20 mm thick cement plaster shall be provided on all exposed concrete surface as well as up to 300 mm below the ground level to give protection to concrete surface from environmental and saline effect.

e) Before coping of chimney top portion, three coats of anti-corrosive paint of minimum 30-35 microns dry film thickness each shall be applied on the stub in the 50 mm coping portion as well as up to 350 mm above CL portion.

A.19.0 The raised chimney foundation is to be provided in areas prone to flooding/water stagnation like paddy field /agricultural field and undulated areas to avoid direct contact of water with steel part of tower. The top of the chimney of foundation should be at least above High Flood Level (HFL) or the historical water stagnation/ logging level (based on locally available data) or above High Tide Level or 500 mm above Natural Ground level (whichever is higher).

A.20.0 (a) Routing of transmission line through protected areas of India shall be avoided to the extent possible. In case, it is not possible to avoid protected areas, the towers of the transmission line up to 765 KV level, which are installed in protected areas, shall be designed Multi-circuit (4-circuits) configuration of same voltage level considering the **Reliability Level and Design Span as per CEA (Technical standards for construction of Electrical Plants and Electric Lines) Regulations 2022, as amended from time to time**. The top two circuits of these multi-circuit towers shall be used for stringing of the transmission line under present scope and the bottom two

circuits shall be made available for stringing of any future transmission line of any transmission service providers/ State transmission utilities/Central transmission utilities passing through the same protected area. Further, the configuration and coordinates of such transmission towers shall be submitted to CEA, CTU and BPC by the TSP

It shall be ensured that Minimum ground clearance is maintained such that statutory Electrical Clearances and Electric Field limit of 10 kV/m at 1 m and 1.8 m from ground level are not violated

A.20.0 (b) Routing of transmission lines through all Metropolitan areas, Municipal Corporations, Municipalities, Nagar Panchayats, and all Urban Planning areas notified by State Governments and Forest areas notified by the Ministry of Environment, Forest and Climate Change (MoEFCC), shall be avoided to the extent possible. However, if it is not possible to avoid these areas, then, in order to optimize Right of Way (RoW) **in all Metropolitan areas, Municipal Corporations, Municipalities, Nagar Panchayats, and all Urban Planning areas notified by State Governments, for up to 765 kV transmission lines, Double Circuit Pole Structures designed with a Reliability Level and Design Span as per CEA (Technical Standards for Construction of Electrical Plants and Electric Lines) Regulations, 2022, as amended from time to time** (preferably with insulated cross arms) shall be implemented.

It shall also be ensured that Minimum ground clearance is maintained such that statutory Electrical Clearances and Electric Field limit of 10 kV/m at 1 m and 1.8 m from ground level are not violated.

In case of more than TWO parallel Circuits up to 400 kV, the same shall be accommodated using Pole Structures designed for so many Circuits.

A.21.0 The TSP shall abide by the Guidelines of CEA w.r.t. shifting of transmission lines for NHAI projects and other projects.

A.22.0 Safety precautions in regards to gas/oil pipelines in vicinity of Transmission lines shall be taken in coordination with gas/ petroleum authorities.

A.23.0 The stringing of the transmission line in the forest area shall be carried out through drones.

A.24.0 The tower shall be designed considering the porcelain Insulators with creepage factor of 31 mm/ kV irrespective of type of insulator used.

A.25.0 RoW width and Span in different terrain shall be as per Schedule VII of CEA (Technical Standards for Construction of Electrical plants and Electric Lines) Regulations 2022 as amended from time to time.

CENTRAL TRANSMISSION UTILITY OF INDIA LTD. सीटीयू

Jam Khambhaliya Jamnagar Power Transmission Limited Core-4, Scope Complex, Lodhi Road New Delhi 110003

SPECIFIC TECHNICAL REQUIREMENTS FOR SUBSTATION

The proposed **Nasik S/s** shall be conventional Air Insulated Substation (AIS) type conforming to the requirements of CEA (Technical Standards for Construction of Electrical Plants and Electric Lines) Regulations, 2022, as amended from time to time.

Extension of proposed **South Olpad S/s** shall be conventional Gas Insulated Substation (GIS) type conforming to the requirements of CEA (Technical Standards for Construction of Electrical Plants and Electric Lines) Regulations 2022, as amended from time to time.

Extension of proposed **Pimpalgaon S/s** shall be conventional Gas Insulated Substation (GIS) type conforming to the requirements of CEA (Technical Standards for Construction of Electrical Plants and Electric Lines) Regulations 2022, as amended from time to time.

Other CEA Regulations/guidelines as amended up to date and Ministry of Power (MoP) guidelines, as applicable, shall also be followed.

B.1.0 Salient features of Substation Equipment and Facilities

The design and specification of substation equipment are to be governed by the following factors:

B.1.1 Insulation Coordination

The system design parameters for substations/switchyards shall be as given below:

Sl. No.	Description of parameters	765/400/220 kV Nasik (AIS)		
		765 kV System	**400 kV System**	**220 kV System**
1.	System Operating Voltage	765 kV	400 kV	220 kV
2.	Maximum voltage of the system (rms)	800 kV	420 kV	245 kV
3.	Rated Frequency	50 Hz	50 Hz	50 Hz
4.	No. of Phases	3	3	3
5.	Rated Insulation Levels			
i)	Lightning Impulse withstand voltage for (1.2/50 micro sec.) - for Equipment other than Transformer and Reactor - for Insulator String	 2100 kVp 2100 kVp	 1425 kVp 1550 kVp	 1050 kVp 1050 kVp

Sl. No.	Description of parameters	765/400/220 kV Nasik (AIS)		
		765 kV System	400 kV System	220 kV System
ii)	Switching Impulse withstand voltage (250/2500 micro sec.) dry and wet	1550 kVp	1050 kVp	--
iii)	One minute power frequency dry withstand voltage (rms)	830 kV	630 kV	--
iv)	One minute power frequency dry and wet withstand voltage (rms)	--	--	460 kV
6.	Corona Extinction Voltage	508 kV	320 kV	--
7.	Max. radio interference voltage for frequency between 0.5 MHz and 2 MHz	2500 micro-volts at 508 kV rms	1000 micro-volts at 266 kV rms	1000 micro-volts at 156 kV rms
8.	Minimum creepage distance for insulator string/ longrod insulators/ outdoor bushings	24800 mm (31 mm/kV)	13020 mm (31 mm/kV)	7595 mm (31 mm/kV)
9.	Minimum creepage distance for switchyard equipment	20000 mm (25 mm/kV)	10500 mm (25 mm/kV)	6125 mm (25mm/kV)
10.	Max. Fault Current	50 kA	63 kA	50 kA
11.	Duration of Fault	1 sec	1 sec	1 sec

Sl. No.	Description of parameters	765 kV South Olpad S/s (GIS)	400 kV Pimpalgaon S/s (GIS)
		765 kV System	400 kV System
1.	System Operating Voltage	765 kV	400 kV
2.	Maximum voltage of the system (rms)	800 kV	420 kV
3.	Rated Frequency	50 Hz	50 Hz
4.	No. of Phases	3	3
5.	Rated Insulation Levels		
i)	Lightning Impulse withstand voltage for (1.2/50 micro sec.) - for Equipment other than Transformer and Reactor - for Insulator String	 2100 kVp 2100 kVp	 1425 kVp 1550 kVp
ii)	Switching Impulse withstand voltage (250/2500 micro sec.) dry and wet	1425 kVp (for GIS) 1550 kVp (for AIS)	1050 kVp
iii)	One minute power frequency dry withstand voltage (rms)	960 kV (for GIS) 830 kV (for AIS)	650 Kv (for GIS) 630 Kv (for AIS)
6.	Corona Extinction Voltage	508 kV	320 kV
7.	Max. radio interference voltage for frequency between 0.5 MHz and 2 MHz	2500 micro-volts at 508 kV rms	1000 micro-volts at 266 kV rms
8.	Minimum creepage distance for insulator string/ longrod insulators/ outdoor bushings	24800 mm (31 mm/kV)	13020 mm (31 mm/kV)
9.	Minimum creepage distance for switchyard equipment	24800 mm (31 mm/kV)	10500 mm (25 mm/kV)
10.	Max. Fault Current	50 kA	63 kA
11.	Duration of Fault	1 sec	1 sec

B.1.2 Switching Scheme

The switching schemes, as mentioned below, shall be adopted at various voltage levels of substation/switchyard:

Substation	765 kV side	400 kV side	220 kV side
765/400/220 kV Nasik (AIS)	One and Half breaker	One and Half breaker	Double Main and Transfer
765 kV South Olpad S/s (GIS)	One and Half breaker	------	-----
400 kV Pimpalgaon S/s (GIS)	------	Double Bus Scheme	-----

Notes: -

i) For one and half breaker switching scheme, any double circuit line consisting of two numbers of feeders and originating from the same transmission or generating switchyard shall not be terminated in one diameter.

ii) Two transformers of same HV rating shall not be connected in the same diameter and similarly two bus reactors of same HV rating shall also not be connected in the same diameter

iii) A diameter in one and half breaker scheme is a set of 3 circuit breakers with associated isolators, earth switches, current transformers etc. for controlling 2 (two) numbers of feeders

iv) In case of GIS substation where the bus scheme is One and Half breaker scheme, the diameters shall be complete with feeder/line side isolator and GIS duct of the future bay shall be brought outside the GIS hall/building with extension/interface module suitably

v) Connection arrangement of Switchable Line reactors shall be such that it can be used as Line reactor as well as Bus reactor with suitable NGR bypass arrangement. Further, Spare 1-phase Shunt Reactor unit shall be placed and connected in such a way that the spare unit can be utilized for all the bus and switchable line reactor banks (including future reactor banks) without its physical movement

vi) Space for 765 kV and 400 kV future line bays shall be kept considering provision of switchable line reactors.

vii) **Space/Provision for Bus sectionalizer:**

a) One (1) set of bus sectionalizer for 765 kV shall comprise Two (2) Nos. of bus sectionalizer bays with associated Circuit Breakers, Isolators and Current Transformers for both buses

b) One (1) set of bus sectionalizer for 400 kV shall comprise Two (2) Nos. of bus sectionalizer bays with associated Circuit Breakers, Isolators and Current Transformers for both buses

c) One (1) set of bus sectionalizer for 220 kV shall comprise Two (2) Nos. of bus sectionalizer bays with associated Circuit Breakers, Isolators and Current Transformers for both buses

viii) TSP shall plan connectivity of line and transformer feeders to bus bar in such a way that all power can be evacuated successfully without crossing thermal limit at any point of bus-bar.

ix) For AIS type substation, TSP shall keep space provisions for future elements such that interconnection arrangement to the corresponding future bays can be done with overhead AIS type connection without any cable/ GIS duct.

x) **765/400/220 kV Nasik S/s:.**

a) 765 kV bay configurations (one and half breaker scheme) shall be as follows:

Configuration	Number of diameters
Bus Reactor- Tie- Line	2 (two)
ICT-Tie- Future*	3 (three)

Note (*): Space for 2 numbers of 765 kV bays shall be utilized for termination of Nasik – Alephata 765 kV D/c line being constructed under transmission scheme "Common Transmission System for evacuation of power from Lakadia (Phase-II: 7.5GW), Jam Khambhaliya (Phase-II: 5.5GW) and Jamnagar (Phase-I: 1GW): PART-C".

b) 400 kV bay configurations (One and Half Breaker scheme) shall be as follows:

Configuration	Number of diameters
ICT (400 kV side of 765/400 kV ICT)- Tie- ICT	3 (three)
Line-Tie- Bus Reactor	2 (two)

c) Provision of 765 kV Bus Sectionalization shall be with the following feeder distribution

765 kV Bus Section-1	765 kV Bus Section-2 (Future)
a) 3 Nos. of Present 765/400 kV ICT **b) 2 Nos. of Present 765 kV Lines** **c) 2 Nos. of Present 765 kV Bus Reactor** *d) 4 Nos. of Future 765 kV Lines*	*a) 3 Nos. of Future 765/400 kV ICT* *b) 6 Nos. of Future 765 kV Lines* *c) 2 Nos. of Future 765 kV Bus Reactor*

d) Provision of 400 kV Bus Sectionalization shall be with the following feeder distribution

400 kV Bus Section-1	*400 kV Bus Section-2 (Future)*
a) 3 Nos. of Present 765/400 kV ICT **b) 3 Nos. of Present 400/220 kV ICT** **c) 2 Nos. of Present 400 kV Line** **d) 2 Nos. of Present 420 kV Bus Reactor** *e) 2 Nos. of Future 400/220 kV ICT* *f) 4 Nos. of Future 400 kV Lines*	*a) 3 Nos. of Future 765/400 kV ICT* *b) 5 Nos. of Future 400/220 kV ICT* *c) 2 Nos. of Future 420 kV Bus Reactor* *d) 6 Nos. of Future 400 kV Lines*

e) Provision of 220 kV Bus Sectionalization shall be with the following feeder distribution

220 kV Bus Section-1	*220 kV Bus Section-2 (Future)*
a) 3 Nos. of Present 400/220 kV ICT **b) 6 Nos. of Present 220 kV Lines** c) *2 Nos. of Future 400/220 kV ICT* d) *2 Nos. of Future 220 kV Line.*	*a) 5 Nos. of Future 400/220 kV ICT* *b) 8 Nos. Future 220 kV Line.*

220 kV Line bays shall be complete along with line side equipment (such as LA, CVT, Wave Trap), gantry, protection panel etc. for termination of 220 kV lines for interconnection of RE Generation Projects

xi) **765 kV South Olpad S/s**:

Refer attached SLD Drawing No. 508SLP-KEC-GIS-E-DW-4000 Rev. No. R6. For termination of South Olpad (GIS) – Nasik 765 kV D/C line, TSP shall construct two Nos. diameters (721-722-723 and 724-725-726) in Section-II with following bay configuration alongwith the 765kV Bus sectionalizer.

Configuration	Number of diameters
Line -Tie- Line* (Future)	**2 (Two)**

Note (*): GIS modules for Line bays shall be provided by TSP under present scope for diameter completion with provision of Switchable Line Reactor in future.

xii) 400 kV Pimpalgaon S/s:

Refer attached SLD Drawing No. PSLD/PRJ30/PG/001 Rev. No. R0 for termination of 2 Nos. 400 kV line bays at Pimpalgaon S/s for Nasik – Pimpalgaon (MSETCL) 400 kV D/C line.

xiii) In one and half breaker scheme, both main bay and tie bay shall be completed for controlling a feeder. Further, all associated interconnection work shall also be in the present scope of TSP.

B.2.0 Substation Equipment and Facilities (Voltage level as applicable):

The switchgear shall be designed and specified to withstand operating conditions and duty requirements. All equipment shall be designed considering the following capacity.

Sl. No	Description of Bay	765/400/220 kV Nasik S/s			765 kV South Olpad S/s	400 kV Pimpalgaon S/s
		765 kV	400 kV	220 kV	765 kV	400 kV
1.	Bus Bar	4000 A	4000 A	3000 A	4000 A	As per existing
2.	Line bay	3150 A	3150 A	1600 A	3150 A	3150 A
3.	ICT bay	3150 A	3150 A	1600 A	N/A	N/A
4.	Reactor bay	3150 A	3150 A	N/A	3150 A	N/A
5.	Bus Sectionaliser bay	N/A	N/A	N/A	4000 A	N/A
6.	Bus Coupler Bay	N/A	N/A	3000 A	N/A	N/A
7.	Transfer Bus coupler bay	N/A	N/A	1600 A	N/A	N/A

B.2.1 (765/√3)/(400/√3)/33 kV, Single Phase Autotransformer

500 MVA, (765/√3)/ (400/√3)/ 33 kV, 1-phase Autotransformer (including arrangement for 3-phase bank formation of 1500 MVA) shall conform to CEA's "Standard Specifications and Technical Parameters for Transformers and Reactors (66 kV and above Voltage Class)" as amended up to date available on CEA's website.

Spare 1-phase Transformer unit shall be placed and connected in such a way that the spare unit can be utilized to replace in case of fault in any unit of any of the transformer banks (including for future transformer banks) without physically moving it.

B.2.2 400/220/33 kV, 3-phase Autotransformer

500 MVA, 400/220/33 kV, 3-phase autotransformer shall conform to CEA's "Standard Specifications and Technical Parameters for Transformers and Reactors (66 kV and above Voltage Class)" as amended up to date available on CEA's website

B.2.3 (765/√3) kV, Single Phase Shunt Reactor

80 MVAr and 110 MVAr, 765/√3 kV, 1-Phase Reactor (including arrangement for 3-phase bank formation of 240 MVAr and 330 MVAr respectively) shall

conform to CEA's "Standard Specifications and Technical Parameters for Transformers and Reactors (66 kV and above voltage class)" as amended up to date available on CEA's website.Spare 1-phase Shunt Reactor unit shall be placed and connected in such a way that the spare unit can be utilized for all the bus and **switchable** line reactor banks (including for future reactor banks) without its physical movement.

Connection arrangement for utilization of existing Spare Single Phase Shunt Reactor unit: TSP shall make the arrangement of present Reactor bank in such a way that the existing spare unit can be utilized for Reactor bank under present scope without its physical movement.

Neutral Grounding Reactor and Surge Arrester for 765 kV Switchable Line Reactors (as applicable):

The neutral of the switchable line reactors (wherever provided) shall be grounded through adequately rated Neutral Grounding Reactors (NGR) to facilitate single phase auto-reclosure, provided that the NGR shall be provided with suitable bypass .

arrangement so that the switchable line reactor can be used as bus reactor as and when required. The neutral of bus reactor shall be solidly grounded.

NGR shall be oil filled or dry type air core for outdoor application. NGR shall conform to CEA's "Standard specifications and technical parameters of transformers and reactors (66 kV and above Voltage Class)", as amended up to date. Technical parameters of NGR shall be as specified in Annexure-A of above-mentioned document.

The Surge Arresters (rated voltage of arrester in co-ordination with ohmic value of NGR shall be decided by the TSP) shall be provided and physically located between the neutral of shunt reactor (brought out at 145 kV class bushing) and neutral grounding reactor. The surge arresters shall be of Station Medium (SM) class duty gapless Metal Oxide (ZnO) type conforming in general to IEC-60099-4. Arresters shall be hermetically sealed units, of self-supporting construction, suitable for mounting on structures.

The Ohmic value of NGR for Line Reactors shall be as follows:

Sl. No.	Line Name	Substation Name	NGR value (Ohm)
1.	765 kV, 240 MVAr Switchable line reactors on each circuit at both ends of South Olpad – Nasik 765 kV D/c line	South Olpad	400
		Nasik	400

B.2.4 420 kV, 3- Phase Shunt Reactor

125 MVAr, 420 kV, 3-Phase Reactor shall conform to CEA's "Standard Specifications and Technical Parameters for Transformers and Reactors (66 kV and above voltage class)" as amended up to date available on CEA website

B.2.5 765 kV and 400 kV GIS equipment

GIS (Gas Insulated Switchgear) shall be Indoor type in accordance to IEC: 62271-203.The switchgear shall be designed and specified to withstand operating conditions and duty requirements. All the switchgear such as Circuit Breaker, isolator, earth switch including CT, PT etc. shall be GIS type. The Surge Arrestor and Voltage Transformer shall be either GIS or outdoor AIS type.

The GIS assembly shall consist of separate modular compartments e.g. Circuit Breaker compartment, Bus bar compartment filled with SF_6 Gas and separated by gas tight partitions so as to minimize risk to human life, allow ease of maintenance and limit the effects of gas leaks failures and internal arcs etc. These compartments shall be designed to minimize the risk of damage to adjacent sections and protection of personnel in the event of a failure occurring within the compartments. Rupture diaphragms with suitable deflectors shall be provided to prevent uncontrolled bursting pressures developing within the enclosures under worst operating conditions, thus providing controlled pressure relief in the affected compartment. The arrangement of gas sections or compartments shall be such as to facilitate future extension of any make without any drilling, cutting or welding on the existing equipment. To add equipment, it shall not be necessary to move or dislocate the existing switchgear bays. The layout of Gas Insulated Bus Ducts shall be properly planned to optimize the length of bus ducts and for easy accessibility for maintenance. The length of busbars, bus ducts, isolator sections shall be optimized considering effects of fast transient voltage due to isolator operations.

The bus bar modules including auxiliary bus modules (wherever applicable) shall be provided with suitable End Piece (Interface) module on both sides with the test link facility for future extension as per provisions of future requirements. The end piece module shall be designed in such a way so that future GIS modules may be tested without extending test voltage to existing bus and vice-versa by removing the test link.

TSP shall make available the complete details for the design of interface module such as cross section, enclosure material, enclosure dimensions (inner and outer), Flange diameter (inner and outer), conductor cross-section and connection arrangement, bolt spacing and dimension, rated gas pressure, Gasket detail etc. Further, adequate space for GIS busbar interface module shall be taken into account for future scope.

Each section shall have plug-in or easily removable connection pieces to allow

for easy replacement of any component with the minimum disturbance to the remainder of the equipment. Inspection windows (View Ports) shall be provided for Disconnector Switches and both type of earth switches i.e. Maintenance and fast operating.

Local Control Cabinets (LCC) shall be provided as per requirement. The alarm and annunciation of GIS equipment shall be wired to the SCADA System.

The material and thickness of the enclosures shall be such as to withstand an internal flashover without burns through for a period of 300 ms at rated short time withstand current. The material shall be such that it has no effect of environment as well as from the by-products of SF6 breakdown under arcing conditions. This shall be validated with Type Test.

Service continuity requirement for GIS:

The GIS equipment with the given bus switching arrangement shall be divided into different gas compartments. During the work such as a fault repair or major maintenance, requiring the dismantling of a gas compartment for which more than one compartments may need to be de-gassed.

TSP shall meet following Service continuity conditions (to the extent possible) with ensuring equipment and operating personnel's safety.

- For One and half breaker bus switching scheme, during a fault in Circuit Breaker compartment, no bus bar and feeder is permitted out of service during maintenance and repair/replacement
- During a fault in a GIS compartment other than the Circuit Breaker compartment, maximum of one bus bar and/or one feeder is permitted out of service during maintenance and repair/replacement

UHF sensors in GIS for PD (Partial Discharge) detection:

The adequate number of Ultra High Frequency (UHF) sensors shall be provided in the offered GIS along with suitable portable type Partial Discharge (PD) measuring instrument for detection of Partial discharge (of 5 pC and above as per IEC 60270). The number and location of these sensors shall be based on laboratory tests on the typical design of GIS as per recommendations of CIGRE Document No. 654 (Application Guide for sensitivity verification for UHF Partial discharge detection system for GIS).

B.2.5.1 Circuit Breakers (GIS)

GIS Circuit breakers shall in general be of C2-M2 class and comply to IEC-62271-100. The rated break time shall not exceed 40 ms (milli second) for 765 kV and 400 kV. Circuit breakers shall be suitable for single phase and three phase auto reclosing. Each breaker would have two sets of trip circuits which would be connected to separate DC supplies for greater reliability. The Circuit breakers controlling 765 kV lines shall be provided with pre-insertion closing resistor of about 450 ohms with 9 ms insertion time or Controlled Switching

Device (CSD). The Circuit breakers controlling 400 kV lines wherever required shall be provided with pre- insertion closing resistor of about 400 ohms with 8 ms insertion time or Controlled Switching Device (CSD) for lines longer than 200 km. The short line fault capacity shall be the same as the rated capacity and this is proposed to be achieved without use of opening resistors. Controlled switching device shall be provided in the Circuit Breaker of the switchable line reactor bay and in Main and Tie bay circuit breakers of line with non-switchable line reactors, Bus reactors and Transformers for 400 kV and above voltage class.

B.2.5.2 Isolators (GIS)

The isolators shall comply to IEC 62271-102 in general. Earth switches shall be provided at various locations to facilitate maintenance. Main blades and earth blades shall be interlocked and interlock shall be fail safe type. All isolators and earth switches shall be motor operated type.

The isolator shall be of extended mechanical endurance class-M2 and suitable for Bus Transfer Current Switching duty as per IEC standards. High speed earthing switches shall be provided for grounding purposes at overhead line terminations and cable terminations and shall have fault making capability as specified. Earth switch for line isolator shall be of earthing switch class E1 and shall be suitable for induced current switching duty as defined for Class-B as per relevant standard.

B.2.5.3 Current Transformers (GIS)

Current Transformers shall comply with IEC 61869 in general. All ratios shall be obtained by secondary taps only. Generally, Current Transformers (CT) shall have five cores (four for protection and one for metering) whereas; CT in Tie bays shall have six cores (four for protections and two for metering) suitably distributed on both sides of CB (for 400 kV and above voltage class). The burden and knee point voltage shall be in accordance with the requirements of the system including possible feeds for telemetry. The accuracy class for protection core shall be PX and for the metering core it shall be 0.2S. The rated burden of cores shall be closer to the maximum burden requirement of metering and protection system (not more than 20 VA for metering core) for better sensitivity and accuracy.

The instrument security factor shall be less than Five (5) for CTs up to 400 kV voltage class and less than 10 for CTs of 765 kV voltage class.

B.2.5.4 Voltage Transformer (GIS)

The voltage transformers shall conform to IEC-61869. Voltage transformers shall be of electromagnetic type with SF6 gas insulation. The earth end of the high voltage winding and the ends of the secondary winding shall be brought out in the terminal box. The voltage transformers shall be located as

separate bay module and will be connected phase to ground and shall be used for protection, metering and synchronization. The voltage transformers shall be of inductive type, nonresistant and shall be contained in their own-SF6 compartment, separated from other parts of installation. The voltage transformer shall be effectively shielded against high frequency electromagnetic transients. The voltage transformer shall have three secondary windings out of which two shall be used for protection and one for metering. The voltage transformer should be thermally and dielectrically safe when the secondary terminals are loaded with the guaranteed thermal burdens. The accuracy class for protection cores shall be 3P. The accuracy of 0.2 on metering core should be maintained throughout the entire burden range on all the three windings without any adjustments during operation. The rated burden of cores shall be closer to the maximum burden requirement of metering and protection system (not more than 50 VA for metering core) for better sensitivity and accuracy.

B.2.5.5 Surge Arresters (GIS) (if applicable)

624 kV Station High (SH) duty and 336 kV Station High (SH) duty gapless type Surge arresters with thermal energy (Wth) of minimum 13 kJ/kV and 12 kJ/kV respectively shall be provided for 800 kV and 420 kV system respectively conforming to IEC 60099-4 in general. Other characteristics of Surge arrester shall be chosen in accordance with system requirements. Surge arresters shall be provided at line entrances, near Transformers and reactors so as to achieve proper insulation coordination. A leakage current monitor with surge counter shall be provided with each surge arrester.

B.2.5.6 SF_6 to Air Bushing

Outdoor bushings, for the connection of conventional external conductors to the SF_6 metal enclosed switchgear, shall be provided. Bushings shall generally be in accordance with the requirements of IEC-60137. The creepage distance over the external surface of outdoor bushings shall not be less than 31 mm/ kV. SF_6 to air Bushing shall be of Polymer/ composite type and shall be robust and designed for adequate cantilever strength to meet the requirement of seismic conditions. The electrical and mechanical characteristics of bushings shall be in accordance with IEC-60137. Polymer/composite insulator shall be seamless sheath of silicon rubber compound. The housing and weather sheds should have silicon content of minimum 32% by weight. It should protect the bushing against environmental influences, external pollution and humidity. The hollow silicon composite insulators shall comply with the requirements of IEC 61462 and the relevant parts of IEC-62217

B.2.6 765 kV, 400 kV and 220 kV AIS equipment

B.2.6.1 Circuit Breakers (AIS)

CENTRAL TRANSMISSION UTILITY OF INDIA LTD. सीटीयू CTU

Jam Khambhaliya Jamnagar Power Transmission Ltd. New Delhi 110003 Core-4, Scope Complex, Lodhi Road

The circuit breakers and accessories shall conform to IEC: 62271-100, IEC: 62271-1 and shall be of SF6 Type. The circuit breakers shall be of class C2-M2 (as per IEC) with regard to restrike probability during capacitive current breaking and mechanical endurance. The rated break time shall not exceed 40 ms for 765 kV and 400 kV circuit breakers and 60 ms for 220 kV circuit breakers. The 765 kV, 400 kV and 220 kV circuit breakers shall be provided with single phase and three phase auto reclosing. Each breaker would have two sets of trip circuits, which would be connected to separate DC supplies for greater reliability. The circuit breakers controlling 765 kV lines shall be provided with either pre-insertion closing resistor of about 450 ohm maximum with 9 ms insertion time or with Controlled Switching Device. The Circuit breakers controlling 400 kV lines shall be provided with either pre insertion closing resistor of about 400 ohm with 8 ms insertion time or with Controlled Switching Device (CSD) for lines longer than 200 km length. The short line fault capacity shall be same as the rated capacity and this is proposed to be achieved without use of opening resistors. The Controlled Switching Device shall be provided in circuit breakers of switchable line reactor bay and in Main and Tie bay circuit breakers of line with non-switchable line reactors, Bus Reactors and Transformers of 400 kV and above voltage class.

B.2.6.2 Isolators (AIS)

The Isolators shall comply with IEC 62271-102 in general. 765 kV Isolator design shall be double break or vertical break or knee-type. 400 kV and 220 kV Isolators shall be double break type. All Isolators and earth switches shall be motor operated. Earth switches shall be provided at various locations to facilitate maintenance. Isolator rated for 400 kV and 220 kV shall be of extended mechanical endurance class – M2 as per IEC-62271-102. Isolator rated for 220 kV shall be suitable for bus transfer current switching duty as per IEC-62271-102. Main blades and earth blades shall be interlocked and interlock shall be fail safe type. The 765 kV, 400 kV and 220 kV earth switch for line isolator shall be suitable for induced current switching duty as defined for Class-B.

B.2.6.3 Current Transformers (AIS)

Current Transformers shall comply with IEC 61869 in general. All ratios shall be obtained by secondary taps only. Generally, Current Transformers (CT) for 765 kV and 400 kV shall have six cores (four for protection and two for metering) and 220 kV Current Transformers shall have five cores (four for protection and one for metering). The burden and knee point voltage shall be in accordance with the requirements of the system including possible feeds for telemetry. The accuracy class for the protection core shall be PX and for the metering core it shall be 0.2S. The rated burden of cores shall be closer to the maximum burden requirement of the metering and protection system (not more than 20 VA for metering core) for better sensitivity and accuracy. The instrument security factor shall be less than five (5) for CTs up to 400 kV

and less than ten (10) for CTs of 765 kV voltage class.

B.2.6.4 Capacitive Voltage Transformers (AIS)

Capacitive Voltage Transformers shall comply with IEC 61869 in general. These shall have three secondaries out of which two shall be used for protection and one for metering. The accuracy class for protection cores shall be 3P and for metering core shall be 0.2. The Capacitive Voltage Transformers on lines shall be suitable for Carrier Coupling. The Capacitance of CVT for 400 kV and 220 kV shall be of 4400/8800 pF depending on PLCC requirements whereas the Capacitance of CVT for 765 kV shall be 8800 pF. The rated burden of cores shall be closer to the maximum burden requirement of metering and protection system (not more than 50 VA for metering core) for better sensitivity and accuracy.

B.2.6.5 Surge Arresters (AIS)

624 kV, 336 kV Station High (SH) duty and 216 kV Station Medium (SM) duty gapless type Surge Arresters with thermal energy (W_{th}) of minimum 13 kJ/kV, 12 kJ/kV and 7 kJ/kV conforming to IEC 60099-4 in general shall be provided for 800 kV, 420 kV and 245 kV systems respectively. Other characteristics of Surge Arrester shall be chosen in accordance with system requirements. Surge Arresters shall be provided at line entrances, near transformers and reactors so as to achieve proper insulation coordination. Surge Arresters shall be provided with porcelain/ polymer housing fitted with pressure relief devices. A leakage current monitor with surge counter shall be provided with each surge arrester.

B.2.7 Protection Relaying and Control System

The protective relaying system proposed to be provided for transmission lines, auto-transformers, reactors and bus bars to minimize the damage to the equipment in the events of faults and abnormal conditions, is dealt in this section. All main protective relays shall be numerical type with IEC 61850 communication interface and should have interoperability during integration of numerical relays to communicate over IEC 61850 protocol with RTU/SAS/IEDs of different OEMs. All numerical relays shall have built in disturbance recording feature.

The protection circuits and relays of the transformer and reactor shall be electrically and physically segregated into two groups each being independent and capable of providing uninterrupted protection even in the event of one of the protection groups failing, to obtain redundancy, and to take protection systems out for maintenance while the equipment remains in service.

a) Transmission Lines Protection

765 kV, 400 kV and 220 kV lines shall have Main-I numerical three zone distance protection scheme with carrier aided inter-tripping feature. 765 kV, 400 kV and 220 kV lines shall also have Main-II numerical distance protection

scheme like Main-I but from different make that of Main-I. The Main-I and Main-II protection relays of same make may be provided only if they are of different hardware and manufacturing platform or different principle of operation.

However, Line Current Differential Relay (with back up distance protection feature) as Main–I and Main-II shall be considered at both ends for short lines (line length below 30 km) having Fiber Optic Communication Link. Differential relay at remote end shall be provided by the TSP. The associated power and control cabling and integration with SAS at remote end shall be provided by respective bay owners.

In case of 220 kV line bays for RE Generators, Line Current differential relay (with back up distance protection feature) as Main-I and Main-II shall be provided. Further, in such cases, the matching line current differential relay for remote end shall be provided by the TSP as loose supply.

Further, all 765 kV, 400 kV and 220 kV lines shall be provided with single and three phase auto- reclosing facility to allow reclosing of circuit breakers in case of transient faults. These lines shall also be provided with distance to fault locators to identify the location of fault on transmission lines.

All 765 kV, 400 kV and 220 kV lines shall also be provided with two stage over voltage protection. The over voltage protection and distance to fault locator may be provided as in-built feature of Main-I and Main-II protection relays. Auto reclose as built-in function of Bay Control Unit (BCU) is also acceptable.

The Main-I and Main-II protection relays shall be fed from separate DC sources and shall be mounted in separate panels.

For 765 kV, 400 kV and 220 kV transmission lines, directional IDMT earth fault relay should be provided as standalone unit or in-built feature of Main-I and Main -II feature.

b) Auto Transformer Protection

These shall have the following protections:

i) Numerical Differential Protection

ii) Numerical Restricted Earth Fault Protection

iii) Numerical Back-up Over-Current and Earth Fault Protection on High Voltage (HV) and Intermediate Voltage (IV) side

iv) Numerical Over Fluxing Protection on HV and IV side

v) Numerical Overload Alarm

Further, Numerical Back-up Over-current and earth fault protection on HV and IV side of autotransformer shall not be combined with other protective functions in the main relays and shall be independent relays. Besides these, power transformers shall also be provided with Buchholz relay, Magnetic Oil Gauge (MOG) with low oil level alarm, protection against high oil and winding temperature and pressure relief device etc.

Suitable monitoring, control (operation of associated circuit breaker and

isolator) and protection for LT auxiliary transformer connected to tertiary winding of Auto-transformer for the purpose of auxiliary supply shall be provided. The over current and other necessary protection shall be provided for the auxiliary transformer. These protection and control may be provided as built-in feature either in the bay controller to be provided for the auxiliary system or in the control and protection IEDs to be provided for autotransformer.

c) 765 kV and 400 kV Reactor Protection

Reactor shall be provided with the following protections:

i) Numerical Differential Protection.

ii) Numerical Restricted Earth Fault Protection

iii) Numerical Back-up Impedance Protection

Besides these, reactors shall also be provided with Buchholz relay, Magnetic Oil Gauge (MOG) with low oil level alarm, protection against oil and winding temperatures and pressure relief device, etc.

d) Bus Bar Protection

The high-speed low impedance type bus bar differential protection, which is essential to minimize the damage and maintain system stability at the time of bus bar faults, shall be provided for 765 kV, 400 kV and 220 kV buses. Duplicated bus bar protection is envisaged for 765 kV and 400 kV bus-bar protection. Bus bar protection scheme shall be such that it operates selectively for each bus and incorporate necessary features required for ensuring security. The scheme shall have complete bus bar protection for present as well as envisaged future bays i.e. input / output modules for future bays for the bus section under present scope shall also be provided.

Bus Bar protection system for new substation shall be de-centralized (distributed) type.

In case, the bus section is provided, then each side of bus section shall have separate set of bus bar protection schemes.

Peripheral Units (PUs) shall be provided by the respective bay owners.

For existing substations, the existing bus bar protection shall be augmented as per requirement. Separate set of bus bar protection schemes including necessary modification with respect to feeder distribution shall be provided where new bus sectionaliser is being implemented.

e) Local Breaker Back up Protection

This shall be provided for each 765 kV, 400 kV and 220 kV circuit breakers and will be connected to de-energize the affected stuck breaker from both sides.

Notes:

1. LBB and REF relays shall be provided separately from transformer differential relay.

2. LBB relay may also be provided as built-in protection function of distributed bus bar protection scheme; however in such case separate LBB relay shall be provided for tie bays (in case of One and Half breaker scheme).

3. Over fluxing and overload protection can be provided as built-in feature of differential relay.

4. In 765 kV and 400 kV switchyard, if spare bay of half diameter is identified as future, Tie CB relay panel shall be with Auto-reclosure feature.

B.2.8 Substation Automation System

a) For all the new substations, state of art Substation Automation System (SAS) conforming to IEC-61850 shall be provided. The distributed architecture shall be used for Substation Automation System, where the controls shall be provided through Bay Control Units. The Bay Control Unit is to be provided bay wise for voltage level 220 kV and above. All Bay Control Units as well as protection units are normally connected through an Optical fibre high speed network. The control and monitoring of circuit breaker, dis-connector, re-setting of relays etc. can be done from Human Machine Interface (HMI) from the Control Room.

The functions of control, annunciation, disturbance recording, event logging and measurement of electrical parameters shall be integrated in the Substation Automation System.

At the new substations, the Substation Automation System (SAS) shall be suitable for the operation and monitoring of the complete substation including proposed future bays/elements.

In the existing substations with a Substation Automation System (SAS), augmentation of existing SAS shall be done for bays under the present scope.

In the existing Substations where Substation automation is not provided, control functions shall be done through control panels.

Necessary gateway and modems (as required) shall be provided to send data to RLDC/SLDC as per their requirement and shall be provisioned with 2+2 redundancy i.e. 2 channels for Main Control Centre and 2 channels for Backup Control Centre. In order to meet this requirement, suitable redundancy at port and card level need to be ensured by the TSP to avoid any single point of failure which may lead to interruption in real-time grid operation. Accordingly, all the hardware for communication services of station as stated above shall support dual redundancy for data transmission of station to respective main and backup RLDCs. Any augmentation work at RLDC/SLDC is excluded from TSP's scope. However, all the configuration work at substation end required to send data to RLDC/SLDC shall be in the scope of TSP.

b) **Time Synchronization Equipment**

Time Synchronization Equipment complete in all respect including antenna, cable and processing equipment required to receive time signal through GPS/NavIC or from National Physical Laboratory (NPL) through INSAT shall be provided at new substations. This equipment shall be used to synchronize SAS and IEDs etc

CENTRAL TRANSMISSION UTILITY OF INDIA LTD. सीटीयू टीयू

Jam Khambhaliya Jamnagar Power Transmission Ltd. Core-4, Scope Complex, Lodhi Road New Delhi 110003

B.3.0 Substation Support Facilities

Certain facilities required for the operation and maintenance of substations as described below shall be provided at the new substation. In existing substation, these facilities have already been provided and will be extended/ augmented as per requirement

B.3.1 AC and DC power supplies

For catering the requirements of three phase and single phase AC supply and DC supply for various substation equipment (for present and future scope), the following arrangement is envisaged:

i. For LT Supply at each new Substation, two (2) Nos. of LT Transformers (minimum 800 kVA for substations with highest voltage rating as 765 kV) shall be provided which shall be fed from two independent sources as per the CEA (Technical Standards for Connectivity to the Grid) Regulations, 2007.

Metering arrangement with Special Energy Meters (SEMs) shall be provided by TSP at 33 kV tertiary of Transformer for drawing auxiliary supply at new substation. Such SEMs shall be provided by CTU at the cost of the TSP. Accounting of such energy drawn by the TSP shall be done by RLDC/RPC as part of Regional Energy Accounting.

Additionally, Active Energy Meters may be provided at the same point in the 33 kV tertiary of Transformer by local SEB/DISCOM for energy accounting.

ii. 2 sets of 220V battery banks for control and protection and 2 sets of 48 V battery banks for PLCC/ communication equipment shall be provided at each new Substation. Each battery bank shall have a float-cum-boost charger.

At new substation, sizing of 220 V battery and battery charger shall be done based on the number of bays specified (including future bays) as per CEA Regulations and relevant IS. 2 sets of 48 V battery banks for PLCC and communication equipment for present and future scope shall be provided at each new Substation with at least 10-hour battery backup and extended backup, if required. 48 V DC can be achieved from 220 V DC battery bank using adapter, if so desired by TSP, without compromising backup time.

iii. Suitable AC and DC distribution boards and associated LT Switchgear shall be provided at new substation.

For new substation, following switch boards shall be considered with duplicate supply with bus coupler/ sectionalizer and duplicate outgoing feeders except for Emergency lighting distribution board which shall have only one incoming feeder:

a) 415 V Main Switch board – 1 No.
b) AC distribution board – 1 No.

CENTRAL TRANSMISSION UTILITY OF INDIA LTD. सीटीयू

Jam Khambhaliya Jamnagar Power Transmission Ltd. New Delhi 110003 Core-4, Scope Complex, Lodhi Road

c) Main lighting distribution board – 1 No.
d) Emergency lighting distribution board – 1 No.
e) 220 Volt DC distribution board – 2 Nos.
f) 48 Volt DC distribution board – 2 Nos

Sizing of LT Switchgear shall be suitable to cater the requirement for all present and future bays. AC and DC distribution boards shall have modules for all the feeders (including future as specified).

iv. At new Substation, one No. of DG set (minimum 500 kVA for substations withhighest voltage rating as 765 kV) shall be provided for emergency applications.

v. At new substation, sizing of battery and battery chargers shall be done based on the number of bays specified (including future bays).

vi. For substation extensions, existing facilities shall be augmented as required.

B.3.2 Fire Fighting System

Fire-fighting system for substation including Transformer and Reactor shall conform to CEA (Measures Relating to Safety and Electric Supply) Regulations, 2023 as amended from time to time.

Further, adequate water hydrants and portable fire extinguishers shall be provided in the substations. The main header of the firefighting system shall be suitable for extension to bays covered under the future scope; necessary piping interface in this regard shall be provided.

Optical Beam type heat detection for GIS hall fire protection system shall be provided for all the GIS halls.

At existing substations, the fire-fighting systems as available shall be extended to meet the additional requirements.

B.3.3 Oil Evacuating, Filtering, Testing and Filling apparatus

To monitor the quality of oil for satisfactory performance of Transformers, Shunt Reactors and for periodical maintenance necessary oil evacuating, filtering, testing and filling apparatus would be provided at new substations. Oil storage tanks of adequate capacities for storage of transformer oil would be provided.

Online Transformer Oil Drying Out System shall be provided in line with the provisions of Standard Specification and Technical Parameters for Transformers and Reactors (66 kV and above Voltage Class) as amended up to date available on CEA website

B.3.4 Illumination

Normal and emergency AC and DC illumination shall be provided adequately in the control room and other buildings of the substation. The switchyard shall also be provided with adequate illumination.

The lighting of the entire control room building, fire-fighting pump house, other building (if any) and switchyard shall be done by LED based low power consumption luminaries.

B.3.5 Control Room

For the new substation, substation control room shall be provided to house substation work stations for station level control (SAS) along with its peripheral and recording equipment, AC and DC distribution boards, DC batteries and associated battery chargers, Fire Protection panels, Telecommunication panels and other panels as per requirements. Air conditioning shall be provided in the building as functional requirements. Main cable trenches from the control room shall have adequate space provision for laying of cables from the control room for all the future bays.

At existing substations, the adequacy of size of control room shall be ascertained and the same shall be augmented as per requirement.

B.3.6 GIS hall

The Gas Insulated Switchgear (GIS) of each voltage level along with other associated equipment shall be housed inside separate GIS building. The panels i.e. Bay level units, bay mimic, relay and protection panels, RTCC panels, PLCC panels, panels for tele-communication system etc. are to be placed in a separate room in the GIS building. The size of the room shall be such that all the panels for the bays under present scope shall be accommodated. The panel room shall be air-conditioned. Further, the temperature of the room shall be monitored through substation automation system by providing necessary temperature transducers. Ventilation system of suitable capacity shall be provided for each GIS hall

One EOT Crane of suitable capacity for erection and maintenance of largest GIS component/assembly and all plant installed in the GIS switchgear room shall be provided in each GIS hall. The crane shall be capable of fulfilling all special requirements for erection and maintenance of GIS equipment. The capacity of the crane shall be sized to lift the heaviest GIS switchgear component.

For extension of existing GIS, existing facilities shall be suitably augmented/ extended for GIS equipment under present scope.

B.3.7 Control Concept

All the EHV circuit breakers in substation/switching stations shall be controlled and synchronized from the switchyard control room/remote control center. All the isolators shall have control from remote/local whereas the earth switches

shall have local control only.

B.3.8 Visual Monitoring System (VMS) for watch and ward of substation premises:

Visual Monitoring System for effective watch and ward of substation premises shall cover all the transformers and reactors, all other major AIS Equipment (such as CB, isolators, CT, CVT, SA etc. as applicable) , GIS bays, panel room, all the gates of switchyard and all entry and exit points of control room building and accordingly the location of cameras shall be decided. In addition to the gates of the switchyard, the cameras shall also be located around the boundaries at suitable locations. The camera shall be high-definition color CCD camera with night vision feature. The VMS data partly/completely shall be recorded (minimum for 15 days) at least @25fps (or better) and stored on network video recorder. The system shall use video signals from various cameras installed at different locations, process them for viewing on workstations/monitors in the control room and simultaneously record all the cameras. The VMS data should go only to the intended personnel/facility and not to the remote server of the Camera (VMS supplier).

Mouse/keyboard controllers shall be used for pan, tilt, zoom and other functions of the desired camera. The Visual Monitoring System shall have provision of WAN connectivity for remote monitoring.

All camera recordings shall have Camera ID and location/area of recording as well as date/time stamp. The equipment should generally conform to Electromagnetic compatibility requirement for outdoor equipment in EHV substation.

Advisory on deployment of CCTV issued by Ministry of Electronics and Information Technology (MEITY) shall be followed.

At existing substations, the Visual Monitoring System if available shall be augmented as per existing or better specification as required.

B.4 General Facilities

a) Line Gantry/Towers are envisaged for bays under the present scope only. However, for adjacent future line bay, gantry/tower shall be designed for extension (considering Hexa conductors for 765 kV, Quad conductors for 400 kV and Twin conductor for 220 kV future lines) wherever applicable.

b) Bay extension works at existing substation shall be executed by TSP in accordance with the requirements/provisions mentioned above. However, interface points shall be considered keeping in view the existing design/arrangement at the substation.

CENTRAL TRANSMISSION UTILITY OF INDIA LTD. सीटीयू CTU

Jam Khambhaliya Jamnagar Power Transmission Ltd. New Delhi 110003 Core-4, Scope Complex, Lodhi Road

c) The TSP shall design the layout of the new substation in such a manner that no overhead transmission lines passes through the identified future area of switchyard expansion.

d) In case of GIS, adequate provisions shall be made to ensure that both the GIS hall and the substation switchyard can be expanded on either side of the existing GIS hall.

e) TSP has to arrange for construction power and water on its own.

f) All outdoor steel structures including anchor/foundation bolts shall be fully galvanized. The weight of the zinc coating shall be at least 610 g/m^2, however, for coastal/creek regions it shall be at least 900 g/m^2. (if applicable)

g) In 765 kV and 400 kV switchyard, if spare bay of half diameter is identified as future, all the equipment for Tie and Future Bay shall be designed considering the current rating of line bay i.e. 3150 A.

h) Boundary wall shall be brick masonry wall with RCC frame or Stone masonry wall or Precast RCC wall under present scope along the property line of complete substation area including future switchyard area to prevent encroachment and unauthorized access. Minimum height of the boundary wall shall be of 1.8 m from Finished Ground Level (FGL).

i) All electrical equipment shall be installed above the Highest Flood Level (HFL) and where such equipment is not possible to be installed above Highest Flood Level, it shall be ensured that there is no seepage or leakage or logging of water.

j) As per CEA (Technical Standards for Construction of Electrical Plants and Electric Lines) Regulations 2022 and CEA Manual on Transmissions Planning criteria 2023, line approaching substation shall normally be perpendicular to the substation boundary for a stretch of 2-3 km. Accordingly, TSP shall ensure that line terminations at substations are arranged in a manner to avoid hindrance to future line terminations at the substations.

k) TSP shall finalize the substation site/layout such that the corridor for the termination of lines, including future lines at the substation, can be accommodated without any constraints. Accordingly, forests, large water bodies, or hills adjacent to the substation boundary should be avoided.

B.5 EXTENSION OF EXISTING SUBSTATION

The following drawings/details of existing substation are attached with the RfP documents for further engineering by the bidder.

Sl.No	Drawing Title	Drawing No./Details	Rev. No.
A.	**765kV South Olpad (GIS) S/s**		
1.0	Single Line Diagram	508SLP-KEC-GIS-E-DW-4000	R6
2.0	General Arrangement	SOUTH OLPAD/GA	0
3.0	Earthmat Layout		
4.0	Visual Monitoring System		
5.0	Bus Bar Protection		
6.0	Substation Automation System (SAS)		
B.	**400 kV Pimpalgaon S/s**		
1.0	Single Line Diagram	PSLD/PRJ30/PG/001	R0
2.0	General Arrangement	ELP/PRJ30/PG/002	R2
3.0	Earthmat Layout	EARTH GRID / PRJ-30/PG/019	R0
4.0	Visual Monitoring System		
5.0	Bus Bar Protection		
6.0	Substation Automation System (SAS)		

B.5.1 The existing drawings provided above and in subsequent amendments to the RfP are as received from the developer of existing substation and provided only for reference. Bidders shall follow the RfP for scope of work. Actual site conditions may be different due to other schemes being executed or subsequent revisions by the developer. Thus, Bidders are advised to visit the substation sites and acquaint themselves for details such as:

i. Actual site conditions, Layout, Topography
ii. Infrastructure such as roads, cable trench, drainage
iii. Space availability in existing control room and LT panel room
iv. Soil investigation
v. Fire hydrant layout
vi. SAS architecture and IO list
vii. Boundary
viii. Design philosophy etc.

SPECIFIC TECHNICAL REQUIREMENTS FOR COMMUNICATION

The communication requirement shall be in accordance to CEA (Technical Standards for Communication System in Power System Operations) Regulations, 2020, CEA (Technical Standards for Construction of Electrical Plants and Electric Lines) Regulations, 2022, CERC (Communication System for inter-State transmission of electricity) Regulations, 2017, CEA Guidelines on Unified Philosophy for placement of PMUs in Indian Grid, March 2025, CEA (Cyber Security in Power Sector) Guidelines, 2021, CERC Guidelines on "Interface Requirements" 2024 and all above documents as amended from time to time.

The communication services viz. SCADA, AGC (wherever applicable), VoIP, AMR and PMU have been identified as critical services and therefore shall be provisioned with 2+2 redundancy i.e. 2 channels for Main Control Centre and 2 channels for Backup Control Centre. In order to meet this requirement, suitable redundancy at port and card level need to be ensured by the TSP to avoid any single point of failure which may lead to interruption in real-time grid operation.

PMU to PDC communication (wherever required) shall be through 2 channels to the PDC (main) as there is no backup PDC at present.

Accordingly, all the hardware for communication services of station as stated above shall support dual redundancy for data transmission of station to respective main and backup RLDCs

The complete ISTS communication system commissioned by TSP under the RFP shall be the asset of ISTS and shall be available for usage of ISTS requirements as suggested by CTU from time to time.

In order to meet the requirement for grid management and operation of substations, Transmission Service Provider (TSP) shall provide the following:

C.1.0 Establishment of 765/400 kV Nasik S/s

I. TSP shall supply, install & commission one or more FODP with minimum 336 Fiber capacity with panel and required approach Cables (48F each) with all associated hardware fittings from gantry towers to Control Room for all the incoming lines envisaged under the present scope.

II. TSP shall supply, install & commission One or more STM-16 (FOTE) equipment alongwith panel/s supporting minimum **seven (7)** MSP (Multiplex Section Protection – 1+1) STM-16 directions alongwith required interfaces to meet the voice and data communication requirement among **Pimpalgaon (MSETCL) S/s**,

III. **South Olpad (GIS), Nasik S/s and upcoming 220 kV line bays for MSETCL**. These directions shall exclude protected (1+1) local patching among equipment (if any). The suitable DC Power Supply and backup to be provided for communication equipment.

IV. FODP & FOTE equipment with panels shall be provided in Control Room of **Nasik S/s.** FOTE & FODP Eq can be accommodated in same panel to optimize space.

V. The new communication equipment under the present scope shall be compatible for integration with existing regional level centralized NMS. The local configuration of the new communication equipment shall be the responsibility of TSP. The configuration work in the existing centralized NMS for integration of new Communication equipment shall be done by Regional ULDC Team, however all the necessary support in this regard shall be ensured by TSP.

VI. TSP shall deploy Cyber Security System in compliance with CEA (Cyber Security in Power Sector) Guidelines, 2021 and CEA (Cyber Security in Power Sector) Regulation, from its date of publication/ notification and their amendments thereof.

VII. The maintenance of all the communication equipment and software thereof including FOTE, FODP, PMU, approach cable, DCPS alongwith Battery Bank & Cyber Security System shall be the responsibility of TSP.

C.20 South Olpad (GIS) – Nasik 765kV D/C line

I. On Nasik S/s – South Olpad (GIS) 765kV D/c line, TSP shall supply, install & commission One (1) no. OPGW cable containing 48 Fibres (48F) on one E/W peak and conventional earth wire on other E/W peak. The TSP shall install this OPGW from gantry of Nasik S/s up to the gantry of South Olpad (GIS) with all associated hardware including Vibration Dampers, mid-way & gantry Joint Boxes (called OPGW Hardware hereafter) and finally terminate in Joint Boxes at end Substations.

II. The transmission line length is 240 kms (approx.), where repeater may be required to meet the link budget requirement of Nasik S/s – South Olpad (GIS) link. To meet link budget requirement of Nasik S/s – South Olpad (GIS) link (including service loops and sag etc.) 1 set of FOTE at repeater station to be provided by TSP.

III. TSP shall finalize the location of repeater station depending upon the actual site conditions. Further, TSP shall comply with the requirements mentioned as per Appendix-F.1.

IV. Maintenance of OPGW Cable, OPGW Hardware & repeater equipment & items associated with repeater shelter shall be the responsibility of TSP.

C.3.0 2 Nos. 765kV line bays at South Olpad (GIS) S/s (Sec-II) for South Olpad – Nasik 765kV D/C line

i. TSP shall supply, install & commission one or more FODP with minimum 144 Fiber capacity with panel and required approach Cables (48F each)

with all associated hardware fittings from gantry towers to Bay Kiosks and from the Bay Kiosks to Control room.

ii. TSP shall supply, install & commission One or more STM-16 (FOTE) equipment along with panel/s supporting minimum three (3) MSP (Multiplex Section Protection – 1+1) STM-16 directions alongwith required interfaces at South Olpad (GIS) to meet the voice and data communication requirement between South Olpad S/s and Nasik S/s. These directions shall exclude protected (1+1) local patching among equipment (if any). The suitable DC Power Supply and backup to be provided for communication equipment.

iii. FOTE/FODP panel shall be installed in the new Bay Kiosk/ Switchyard Panel Room (SPR). The FOTE under present scope shall be integrated by TSP with the FOTE at control room of South Olpad (GIS) which shall be communicating with respective control center. TSP to provide necessary FODP sub rack / Splice trays/ Patch cords etc. and optical interfaces/equipment in the existing/ upcoming FOTE/FODP panels in control room for integration with the existing FOTE for onwards data transmission.

In case spare optical direction is not available in the existing/ upcoming FOTE at the control room, the TSP shall coordinate with station owner to reconfigure the directions in existing FOTE at control room. Alternatively, The TSP may integrate the FOTE under the present scope with existing/ upcoming FOTE in the nearby Kiosk connected to the control room FOTE (if available with spare direction). For this purpose, TSP shall provide necessary FODP sub rack / Splice trays/ Patch cords etc. and suitable optical interfaces/ equipment in the existing/ upcoming FOTE/FODP panels in another Kiosk (SPR).

iv. FOTE & FODP can be accommodated in same panel to optimize space.

The new communication equipment under the present scope shall be compatible for integration with existing regional level centralized NMS. The local configuration of the new communication equipment shall be the responsibility of TSP. The configuration work in the existing centralized NMS for integration of new Communication equipment shall be done by Regional ULDC Team, however all the necessary support in this regard shall be ensured by TSP.

The maintenance of all the communication equipment and software thereof including FOTE, PMU, FODP, approach cable, DCPS alongwith Battery Bank shall be the responsibility of TSP.

C.4.0 Nasik S/s – Pimpalgaon (MSETCL) 400kV D/C line (Quad ACSR/AAAC/AL59 moose equivalent)

i. On Nasik S/s – Pimpalgaon (MSETCL) S/s 400kV D/c line, TSP shall supply, install & commission One (1) No. OPGW cable containing 48 Fibres (48F) on one E/W peak and conventional earth wire on other E/W peak. The TSP shall install this OPGW from gantry of Nasik S/s up to the gantry of Pimpalgaon (MSETCL) S/s with all associated hardware including Vibration Dampers, mid-way & gantry Joint Boxes (called OPGW Hardware hereafter) and finally terminate in Joint Boxes at end Substations.

ii. The transmission line length is 80 kms (approx.), where repeater may not be required to meet the link budget requirement of Nasik – Pimpalgaon (MSETCL) link.

iii. Maintenance of OPGW Cable, OPGW Hardware & repeater equipment & items associated with repeater shelter shall be the responsibility of TSP.

C.5.0 2 Nos. 400 kV line bays at Pimpalgaon S/s for Nasik – Pimpalgaon (MSETCL) 400kV D/C line (Quad ACSR/AAAC/AL59 moose equivalent)

i. TSP shall supply, install & commission one or more FODP with minimum 144 Fiber capacity with panel and required approach Cables (48F each) with all associated hardware fittings from gantry towers to Bay Kiosk and from the Bay Kiosks to Control room.

ii. TSP shall supply, install & commission One or more STM-16 (FOTE) equipment alongwith panel/s supporting minimum three (3) MSP (Multiplex Section Protection – 1+1) STM-16 directions alongwith required interfaces at Pimpalgaon (MSETCL) S/s meet the voice and data communication requirement between Pimpalgaon (MSETCL) S/s and Nasik S/s. These directions shall exclude protected (1+1) local patching among equipment (if any). The suitable DC Power Supply and backup to be provided for communication equipment.

iii. FOTE/FODP panel shall be installed in the new Bay Kiosk/ Switchyard Panel Room (SPR). The FOTE under present scope shall be integrated by TSP with the FOTE at control room of Pimpalgaon (MSETCL) S/s which shall be communicating with respective control center. TSP to provide necessary FODP sub rack / Splice trays/ Patch cords etc. and optical interfaces/equipment in the existing FOTE/FODP panels in control room for integration with the existing/ upcoming FOTE for onwards data transmission.

iv. In case spare optical direction is not available in the existing/ upcoming FOTE at the control room, the TSP shall coordinate with station owner to reconfigure the directions in existing/ upcoming FOTE at control room. Alternatively, The TSP may integrate the FOTE under the present scope with existing/ upcoming FOTE in the nearby Kiosk connected to the control room FOTE (if available with spare direction). For this purpose,

TSP shall provide necessary FODP sub rack / Splice trays/ Patch cords etc. and suitable optical interfaces/ equipment in the existing/ upcoming FOTE/FODP panels in another Kiosk (SPR).

v. FOTE & FODP can be accommodated in same panel to optimize space.

vi. The new communication equipment under the present scope shall be compatible for integration with existing regional level centralized NMS. The local configuration of the new communication equipment shall be the responsibility of TSP. The configuration work in the existing centralized NMS for integration of new Communication equipment shall be done by Regional ULDC Team, however all the necessary support in this regard shall be ensured by TSP.

The maintenance of all the communication equipment and software thereof including FOTE, PMU, FODP, approach cable, DCPS alongwith Battery Bank shall be the responsibility of TSP.

C.6.0 Specific Requirement for Phasor Measurement Units (PMUs)

TSP shall supply, install & commission required no. of Phasor Measurement Units (PMUs) as per Guidelines for Unified Philosophy for Placement of Phasor Measurement Units (PMUs) in Indian Grid (along with all amendments if any) dated March 25 and all the applicable Regulations, Standards, Guidelines issued time to time. These PMUs shall be provided with GPS clock and LAN switch and shall connect with LAN switch of control room of respective substations/ generating stations with Fibre Optic cable. These PMUs shall be connected with the FOTE at Substation/ generating stations for onwards data transmission to the PDC (Phasor Data Concentrator) located at respective RLDC. Configuration work in existing PDC at RLDC for new PMU integration shall be done by respective RLDC, however all the necessary support in this regard shall be ensured by TSP. The maintenance of all the PMUs and associated equipment shall be the responsibility of TSP.

Note: Existing Station owner/s to provide necessary support to integrate different equipment & applications of new extended bays with the existing substation e.g. Communication (through FOTE), Voice etc. for smooth operation and monitoring of new added grid elements

Communication system integration in UNMS/CSMS

TSP is to ensure integration of communication system into UNMS/CSMS as per following:

"The new communication equipment/ system under the present scope shall be compatible for integration with existing regional level NMS system/ Centralized Supervision & Monitoring System (CSMS) i.e. Regional UNMS. The local configuration of the new communication equipment/ system at the station end shall be the responsibility of TSP as per followings. The configuration work in the existing centralized NMS/ UNMS at Control center end, for integration of new Communication equipment/ system shall be done by Regional ULDC Team/ NMT, however all the necessary support in this regard shall be ensured by TSP.

Requirement for integration of Communication Equipment/ system with Regional UNMS:

1. TSP shall ensure that NMS/EMS/NE supplied by them is NBI compliant and all FCAPS functionality is supported in the NBI such as NE Inventory, Hardware Inventory– Shelf/Slot/Card/SFP/Port, Topology, Protections, Alarms, Performance-real time & periodic, Performance KPI parameters (E-1, STM, Ethernet), Remote Configuration, Cross Connects, Trails & Circuits, Services Provisioning (NE), E-1, STM, Ethernet, TX & RX Trace, loop back and details are published in the NBI guide for the configuration parameters.

2. TSP shall be obliged to provide/share all necessary documentations such as NBI Guide/MIB/IDL/WSDL/API files etc. for onward integration of their NMS/EMS/NE with regional UNMS.

3. The following support shall be provided by TSP for integration of their supplied equipment with regional UNMS.
   - Enabling & activating NBI license in their EMS/NMS and providing NBI login access along with User credentials.
   - Assist in verifying NBI Connectivity with UNMS vendor for the successful communication and retrieval of data.
   - Assist in troubleshooting (if required) for NBI connectivity along with UNMS vendor for the communication and retrieval of data.

4. For standalone NE which is not integrated with any EMS/NMS, TSP shall provide modality of complete FCAPS data acquisition as above through industry standard programmatic methods and provide the CLI command manual."

Appendix-F.1

Repeater Requirements

- If the repeater location is finalized in the Control Room of a nearby substation, TSP shall provide OPGW to accommodate all the fibers in main transmission line on a single Earthwire peak with OPGW Hardware & mid-way Joint Boxes etc. of the line crossing the main line and required approach Cable to accommodate all the OPGW fibers with all associated hardware fittings, to establish connectivity between crossing point of main transmission line up to the repeater equipment in substation control room.

  TSP shall co-ordinate for Space & DC power supply sharing for repeater equipment. TSP shall provide FODP, FOTE (with STM-16 capacity) with suitable interfaces required for link budget of respective link.

OR

- If the repeater location is finalized in the nearby substation premises, the TSP shall identify the Space for repeater shelter in consultation with station owner. Further TSP shall provide OPGW to accommodate all the fibers in main transmission line on a single Earthwire peak with OPGW Hardware & mid-way Joint Boxes etc. of the line crossing the main line and required approach Cable/UGFO to accommodate all the OPGW fibers with all associated hardware fittings, to establish connectivity between crossing point of main transmission line up to the substation where the repeater shelter is to be housed.

  TSP shall provide repeater shelter along with FODP, FOTE (with STM-16 capacity) with suitable interfaces require for link budget of respective link, reliable power supply provisioning for AC and DC supply, battery bank, Air Conditioner and other associated systems.

OR

- If the repeater location is finalized on land near the transmission tower. TSP shall make the provisions for Land at nearby tower for repeater shelter. Further TSP shall provide required approach Cable to accommodate all the OPGW fibers with all associated hardware fittings to establish connectivity up to the location of repeater shelter.

  TSP shall provide repeater shelter along with FODP, FOTE (with STM-16 capacity) with suitable interfaces require for link budget of respective link, reliable power supply provisioning for AC and DC supply, battery bank, Air Conditioner and other associated systems

Maintenance of OPGW Cable and **OPGW Hardware**, repeater equipment & items associated with repeater shelter shall be responsibility of TSP.

Note: Existing Station owner/s to provide necessary support to integrate different equipment & applications of new extended bays with the existing substation e.g. Communication (through FOTE), PMUs, Voice etc. for smooth operation and monitoring of new added grid elements.

Common Transmission System for evacuation of power from Lakadia (Phase II: 7.5GW), Jam Khambhaliya (Phase-II: 5.5GW) and Jamnagar (Phase-I: 1GW) - Part-B (Est. Cost: 3839 Cr.)

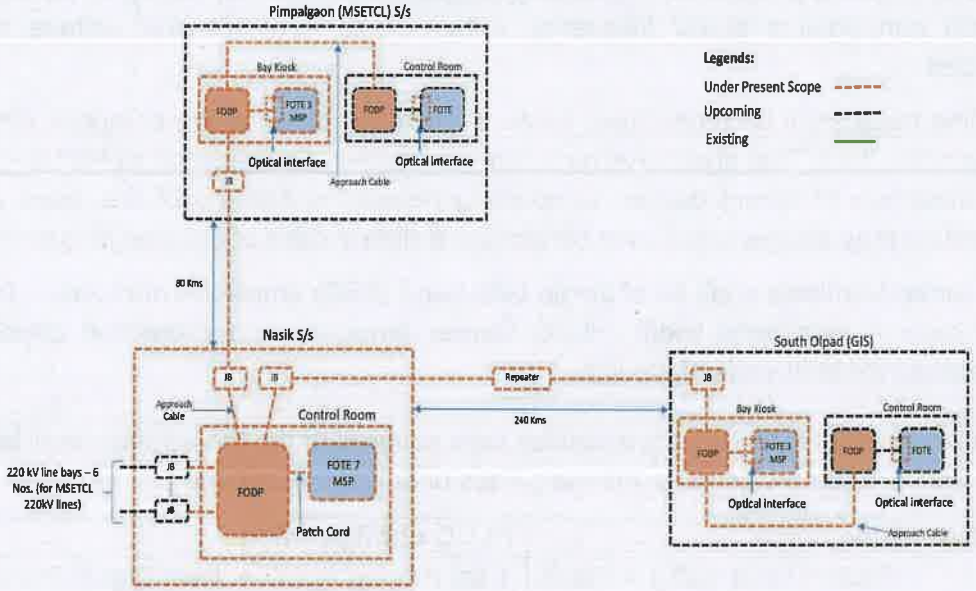

Figure F.1

C.7.0 PLCC and PABX:

Power line carrier communication (PLCC) equipment complete for speech, tele-protection commands and data channels shall be provided on each transmission line. The PLCC equipment shall in brief include the following: -

- Coupling device, Coupling filters line traps, carrier terminals, protection couplers, HF cables, PABX (if applicable) and maintenance and testing instruments.
- At new substation, a telephone exchange (PABX) of 24 lines shall be provided at as means of effective communication among various buildings of the substation, remote end substations and with control centres (RLDC/ SLDC) etc.
- Coupling devices shall be suitable for phase-to-phase coupling for 400 kV Transmission lines. The pass band of coupling devices shall have sufficient margin for adding communication channel in future if required. Necessary protection devices for safety of personnel and low voltage part against power frequency voltages and transient over voltage shall also be provided.
- The line traps shall be broad band tuned suitable for blocking the complete range of carrier frequencies. Line Trap shall have necessary protective devices such as lightning arresters for the protection of tuning device. Decoupling network consisting of line traps and coupling capacitors may also be required at certain substation in case of extreme frequency congestion.
- The carrier terminals shall be of single side-band (SSB) amplitude modulation (AM) type and shall have 4 kHz band width. PLCC Carrier terminals and Protection couplers shall be considered for both ends of the line.
- PLCC equipment for all the transmission lines covered under the scheme shall be provided by TSP. PLCC to be provided for following lines under present scope:

Sl. No	Line name	PLCC configuration
1.	South Olpad (GIS) – Nasik 765 kV D/C line	1 set Analog PLCC + 1 set Digital Protection Coupler for each circuit at both ends.
2.	Nasik–Pimpalgaon (MSETCL) 400 kV D/C line	1 set Analog PLCC + 1 set Digital Protection Coupler for each circuit at both ends.

- Further, CVT and Wave trap for all 765 kV ,400 kV and 220 kV line bays under present scope shall be provided by TSP.
- All other associated equipment like cabling, coupling device and HF cable shall also be provided by the TSP.
- Two (2) sets of 48 V battery banks for PLCC and communication equipment shall be provided at each new Substation with at least 10-hour battery backup and extended backup, if required

Frequently Asked Queries:

1.0 **Transmission Line:**

1.1 Please clarify that whether shutdowns for crossing of existing transmission lines of POWERGRID/STUs/ Power Evacuation Lines from Generation Plants/ Any other Transmission Licensee will be given to TSP on chargeable basis or free of cost.

Reply: Shutdowns for crossing of existing transmission lines of POWERGRID/ STUs/ Power Evacuation Lines from Generation Plants/ Any other Transmission Licensee will be given to TSP by the concerned owner of the lines as per their own terms and conditions. As far as shutdown of ISTS lines are concerned the same can be availed by approaching respective Regional Power Committee.

1.2 We understand that the suggested swing angle criteria are applicable for Suspension Insulator in Suspension Tower. Further, you are requested to provide similar swing angle and clearance criteria for Pilot Insulator with Jumper and Jumper.

Reply: It is clarified that the swing angle criteria (as mentioned in RFP) for transmission lines is applicable for Suspension Insulator in Suspension Tower. Further, as per Clause 3.0 of Specific Technical Requirements for transmission lines, Transmission service Provider (TSP) shall adopt any additional loading/design criteria for ensuring reliability of the line, if so desired and /or deemed necessary.

1.3 We request you to kindly allow that use of diamond configuration at Power line crossings and the existing owner of the lines may be directed to allow the same for the successful bidders.

Reply: Power line crossing including Diamond configuration is the responsibility of the TSP. TSP shall formally submit the profile of the crossing section to the owner of the existing line suggesting proposed crossing alternatives. The crossing will have to be carried out as per approval of owner of the existing line.

1.4 It is requested you to kindly provide present status of Forest Clearances if any transmission line corridor area falling in wildlife forest / reserve forest/ mangroves

Reply: Based on the preliminary route survey, the process of initiation of forest clearance for the forest stretches, if any, enroute the proposed line alignment will be initiated by way of writing letters to the concerned authority (ies). However, it may be noted that it will be the responsibility of TSP for obtaining forest clearance for the forest

stretches as provided in the survey report and also for any forest area encountered during detailed survey.

1.5 For transmission line, no special requirement is specified for type of Insulator and creepage in RFP document. Hence it is understood that bidder can decide the type of insulator along with creepage requirement based on general CEA regulations and relevant standards. Kindly confirm.

Reply: The minimum specific creepage distances shall be decided for the site pollution severity in the area of installation keeping in mind further increase in pollution during life of the line. It shall be as per CEA regulations and relevant standards. However, the tower shall be designed considering the porcelain insulators with creepage factor of 31 mm/kV irrespective of type of insulator used.

2.0 Substation

2.1 We understand that space for storage of O&M spare shall be provided by the existing owner within the station boundary without any cost. Kindly confirm.

Reply: Space for storage of O&M spares shall be arranged by TSP on its own.

2.2 We presume that the O&M for the end Termination bays will be in the scope of the TSP and TSP shall not be liable for any payment towards O&M to the existing owner of the substation. Kindly confirm.

Reply: Operation and maintenance of the bays is solely the responsibility of the TSP. Further, TSP shall follow CEA's "Operation and Maintenance (O&M) guidelines and Standard Format for Memorandum of Understanding between New TSP and Existing TSP" issued by CEA vide its letter No. I/28514/2023 dated 22.06.2023.

2.3 With reference to subject scheme of existing sub-station, we assumed following scope of work:

(a) We assumed internal road is available and need not to be consider in the present scope of work.

(b) Drainage is available and need not to consider in the present scope of work.

(c) Cable trench extension adjacent to Main cable trench only under present scope of work.

(d) Levelled area being provided by developer for bay extension.

Reply: Regarding requirement of internal road, drainage, cable trench, leveling of the bay extension area, bidder is advised to visit site and acquaint themselves with the provisions/facilities available at substation.

2.4 Kindly provide the soil investigation report of soil parameters of existing substation.

Reply: Bidder is advised to visit the substation site and ascertain the requisite parameters.

2.5 Kindly confirm, energy accounting of aux. power consumption. Whether it will be on chargeable basis or part of transmission loss.

Reply: It will be on a chargeable basis.

2.6 We understand that VMS requirement is for unmanned stations only. For Manned stations VMS is not compulsory.

Reply: VMS shall be provided in line with requirements of RfP document.

2.7 It is understood that Construction water and power shall be provided free of cost to TSP by the respective substation owner for construction of new bays.

Reply: Arrangement of construction power and water is in the scope of TSP.

2.8 It is understood that the existing fire hydrant system shall be extended by the TSP for bay extension.

Reply: Existing fire hydrant system shall be extended from existing system (if required)

2.9 Please clarify the Status of land acquisition for new Substations. Whether the lands have been acquired by BPC and will be transferred to TSP.

Reply: The acquisition of land for new substation is in the scope of TSP.

2.10 We understood that no any dedicated metering CT and CVT required for Line/feeders. Further, we understood that requisite Energy meters for various 765 kV, 400 kV and 220 kV Feeders shall be provided and installed by CTU free of cost to TSP.

CENTRAL TRANSMISSION UTILITY OF INDIA LTD. केंद्रीय टीयू

Jam Khambhaliya Jamnagar Power Transmission Ltd. New Delhi 110003 Scope Complex, Lodhi Road

Reply: Dedicated metering CT and CVT are not required for line/feeders. Metering core of existing CT/CVT can be used provided accuracy class matches with metering requirement. Requisite Special Energy Meters shall be provided and installed by CTU at the cost of TSP in C & P panel subject to space availability, else, in separate metering panel (to be provided by TSP at its cost).

2.11 A draft copy of the Connection Agreement may be furnished. A draft copy of the Connection Agreement may be furnished.

Reply: Web page link https://www.ctuil.in/formats_gna_transition

2.12 Please clarify whether the spare 765 kV single phase Reactor unit for Bus reactor shall be provided with 1ph 765 kV CB.

Reply: As per RfP, the spare 1-Ph reactor unit shall be utilized for all the bus and switchable line reactor banks (including for future reactor banks). Hence, 1ph 765 kV
CB shall also be provided with spare 1-Ph reactor for utilizing with bus reactor as well as switchable line reactor.

2.13 It is understood that existing busbar protection has provision for future bays and also PUs are available for future bays. BPC to confirm availability of CU and PU for bays under present scope of work at existing substations. BPC may kindly confirm availability of communication ports for integrating new PUs with the existing CUs at existing substations.

Reply: Bus Bar Protection with Central Unit (CU) is required for the new bus section as specified in RfP. Peripheral Units (PUs) shall be provided by the respective bay owner. Further, augmentation/replacement of existing CU, if required, to meet the system requirement shall also be provided for proper functioning of bus bar protection.

2.14 For SCADA, it is understood that necessary process I/O shall be available for future bays and accordingly license for same. BPC to confirm.
Reply: Necessary process I/O along with license shall be in the scope of the successful bidder.

2.15 No separate FF system is envisaged under the present scope of work for existing substation. BPC to confirm.

Reply: Existing fire-fighting systems shall be extended to meet the additional requirements under present scope.

2.16 PLCC for 220 kV Lines are not under the scope of TSP. BPC to Confirm.
It is requested to provide Type of Coupling for 220 kV Transmission Lines

under present scope.

Reply: PLCC for 220 kV line is in the scope of developer of the line. Inter circuit coupling for 220 kV D/C and phase to phase coupling for 220 kV S/C shall be applicable for PLCC.

2.17 BPC is requested to confirm the availability of space in the existing control rooms at existing substation for execution of extension work under current project.

Reply: Switchyard Panel Rooms are generally required for AIS type substation and relay room are required for GIS type substation. Further, if needed, the control room shall be augmented as per requirement.

3.0 Communication

3.1 What are the usage of OPGW, FOTE, PMU etc. under communication requirement of RFP?

Reply: User shall be responsible for providing compatible equipment along with appropriate interface for uninterrupted communication with the concerned control center and shall be responsible for successful integration with the communication system provided by CTU.

Communication systems e.g. OPGW, FOTE etc. and PMU are required for grid operation through RLDC/SLDC, speech communication, tele-protection and tele-metering.

3.2 Is space for installation of communication panels are provided to TSP in existing Substations incase new bays are in the scope of TSP?

Reply: The space related issues are deliberated in the RfP itself. TSP to install FOTE/FODP panels in the new Bay Kiosk (Switchyard Panel Room (SPR)) / Bay Kisok/ Relay Panel Room (in case of GIS S/s). Further, TSP to connect and integrate the proposed FOTE with the existing FOTE in the control room to complete the communication path upto RLDC.
In Case 132 kV Substation TSP shall accommodate the said panels either by extension of existing control room or other arrangements.

3.3 How is the OPGW laying done in case of LILO lines?

Reply: In case LILO lines are on same towers (e.g. both Line in and Line Out portion are on same towers, generally done LILO of S/C lines). Then 2x48F OPGW shall be required to install by TSP on both earthwire peak on 400 kV and 765 kV lines where two E/W peaks are available. On 220 kV and 132 kV lines where only one E/W peak is available TSP

to install one No. 96F OPGW.

Incase LILO lines are on different towers (e.g. both Line In and Line Out portion are on different towers, generally done LILO of D/C lines). Then 1x48F OPGW shall be required to install by TSP on one earthwire peak and conventional earthwire on second earthwire peak, on both Line In and Line Out portion towers of 400 kV and 765 kV lines. On 220 kV and 132 kV lines where only one E/W peak is available TSP to install one No. 48F OPGW in place of conventional earthwire.

3.4 How is the OPGW laying done in case Multi circuit Towers?

Reply: In case two different lines are using common multi circuit portion for some distance (originating from different stations, may be terminating on same or on different stations). Two No. 48F OPGW to be installed on both E/W peaks for common M/C portion of 765 kV and 400 kV lines.

Incase 220/132 kV lines using multi circuit portion where single E/W peak is available one No. 96F may be installed for common multi circuit portion.

3.5 How PMUs are integrated for new bays at existing Substations?

Reply: PMU data of new bays to be provided in the ethernet port of switch at control room and thereafter to be connected with existing FOTE of existing substation to send data to PDC of RLDC by TSP. These PMUs shall be provided with GPS/NavIC clock and LAN switch and shall connect with LAN switch of control room of respective substations with Fiber Optic cable. In this regard, the "Guidelines on Unified Philosophy for placement of PMUs in Indian Grid" issued vide letter No. CEA-PS-14-12/9/2024-PSETD Division dated 19.03.2025 shall be followed.

3.6 Is Spare direction available in existing FOTE for integration with new bay kiosk FOTE

Reply: The FOTE under present scope shall be integrated by TSP with the existing FOTE at control room of substation for onwards data transmission.

In case spare optical direction is not available in the existing FOTE at the control room, the TSP shall coordinate with station owner to reconfigure the directions in existing FOTE at control room.

CENTRAL TRANSMISSION UTILITY OF INDIA LTD. सीटीयू CTU

Jam Khambhaliya Jamnagar Power Transmission Ltd. New Delhi 110003

3.7 What is the distance from LILO point to proposed substation for feasibility of repeater station?

Reply: Tentative Location of LILO point shall be as per survey report of BPC however, exact location to be ascertained after detailed survey by TSP.

3.8 What is the make and model of existing OPGW in case LILO of main line at new substation?

Reply: All OPGW (alongwith optical fibers) meet Central Electricity Authority (Technical Standards for Communication System in Power System Operations) Regulations, 2020 and bidder shall install OPGW accordingly.

3.9 In case of LILO of existing line at new substation who shall provide PMUs at existing substation bays?

Reply: TSP shall provide the PMUs for the scope under the RfP in compliance of the "Guideline on Unified Philosophy for placement of PMUs in Indian Grid" issued vide letter No. CEA-PS-14-12/9/2024- PSETD Division dated 19.03.2025.

4.0 Planning :

4.1 Whether the Project/ Elements are eligible for early commissioning incentive as per MoP, GoI order dated 15.07.2015.

Reply: Commissioning is to be done as per the timeline mentioned in RfP. However, early commissioning shall be treated as per applicable CERC Regulations/orders.

Schedule: 2

Scheduled

COD

[Note: As referred to in the definition of "Element", "Scheduled COD", and in Articles 3.1.3 (c), 4.1 (b) and 4.3 (a) of this Agreement]

Inter-Regional Strengthening between SR Grid and WR Grid

Sl. No.	Name of the Transmission Element	Scheduled COD	Percentage of Quoted Transmission Charges recoverable on Scheduled COD of the Element of the Project	Element(s) which are pre-required for declaring the commercial operation (COD) of the respective Element
1.	Establishment of 765/400 kV, 3x1500 MVA & 400/220 kV, 3x500 MVA Nasik S/s (towards South of Nasik) with 2x330 MVAr 765 kV bus reactor and 2x125 MVAr 400 kV bus reactor.	36 months (19.10.2029)	100%	All the elements are required simultaneously to ensure their utilization
2.	South Olpad (GIS) – Nasik 765 kV D/C line			
3.	2 Nos. 765 kV line bays at South Olpad (GIS) S/s (Sec-II) for South Olpad – Nasik 765 kV D/C line.			
4.	765 kV, 240 MVAr Switchable line reactors on each circuit at both ends of South Olpad – Nasik 765 kV D/C line.			
5.	Nasik – Pimpalgaon (MSETCL) 400 kV D/C line (Quad ACSR/AAAC/AL59 moose equivalent)			
6.	2 Nos. 400 kV line bays at Pimpalgaon (GIS) S/s for Nasik – Pimpalgaon (MSETCL) 400 kV D/C line (Quad ACSR/AAAC/AL59 moose equivalent)			

Note: *Effective date as per TSA of present scheme shall be matched with the Effective date of "Common Transmission System for evacuation of power from Lakadia (Phase-II: 7.5 GW), Jam Khambhaliya (Phase-II: 5.5 GW) and Jamnagar (Phase-I: 1 GW)" Parts A & C. and "Transmission System for Integration of Power from RE Projects in Lakadia REZ in Gujarat-Phase II (7500 MW)".*

Schedule: 3

Safety Rules and Procedures

[Note: As referred to in Articles 5.6 of this Agreement]

1: **Site Regulations and Safety:**

The TSP shall establish Site regulations within sixty (60) days from fulfilment of conditions subsequent, as per Prudent Utility Practices setting out the rules to be observed till expiry of the Agreement at the Site and shall comply therewith.

Such Site regulations shall include, but shall not be limited to, rules in respect of security, safety of the Project, gate control, sanitation, medical care, and fire prevention, public health, environment protection, security of public life, etc.

Copies of such Site regulations shall be provided to the Nodal Agency and the CEA for the purpose of monitoring of the Project.

2: **Emergency Work:**

In cases of any emergency, the TSP shall carry out all necessary remedial work as may be necessary.

If the work done or caused to be done by any entity , other than the TSP, the TSP shall, reimburse the actual costs incurred, to the other Party carrying out such remedial works.

3: **Site Clearance:**

In the course of execution of the Agreement, the TSP shall keep the Site reasonably free from all unnecessary obstruction, storage, remove any surplus materials, clear away any wreckage, rubbish and temporary works from the Site, and remove any equipment no longer required for execution of the Agreement. After completion of all Elements of the Project, the TSP shall clear away and remove all wreckage, rubbish and debris of any kind from the Site, and shall leave the Site clean and safe.

4: **Watching and Lighting:**

The TSP shall provide and maintain at its own expense all lighting, fencing, and watching when and where necessary for the proper construction, operation, maintenance / repair of any of the Elements of the Project, or for the safety of the owners and occupiers of adjacent property and for the safety of the public, during such maintenance / repair.

CENTRAL TRANSMISSION UTILITY OF INDIA LTD. सीटीयू टीयू

Jam Khambhaliya Jamnagar Power Transmission Ltd. New Delhi 110003 Core-4, Scope Complex, Lodhi Road

Schedule: 4

Computation of Transmission Charges

1.1 General

The Monthly Transmission Charges to be paid to the TSP for providing Transmission Service for any Contract Year during the term of the Agreement shall be computed in accordance with this Schedule and paid as per Sharing Regulations.

Illustration regarding payment of Transmission Charges under various scenarios (considering definitions of Contract Year, Expiry Date & Monthly Transmission Charges above) is as below: -

Illustration-1: In case the Project Elements achieve COD as per Schedule

Quoted Transmission Charges: **Rs. 140 Million**

Completion Schedule:

Element No.	Completion Schedule in Months	Scheduled CoD of the Element	Actual CoD of the Element	% Charges recoverable on Scheduled CoD of the Element
Element 1	28	1-Feb-2018	1-Feb-2018	25%
Element 2	38	1-Dec-2018	1-Dec-2018	75%

Tariff Payable as follows:

Transmission Charges for Element 1			**Transmission Charges for Element 2**		
1-Feb-18 to 31-Mar-18	140 X 25% X ((28+31)/365)	5.65		--	0.00
1-Apr-18 to 30-Nov-18	140 X 25% X (244/365)	23.39		--	0.00
1-Dec-18 to 31-Mar-19	140 X 100% X (121/365)				46.41
2	140 X 100% X 1				140
3	140 X 100% X 1				140
4	140 X 100% X 1				140
5	140 X 100% X 1				140
.....					
.....					
36 (1-Apr to 30-Nov)	140 X 100% X (244/365)				93.59

Illustration-2: In case of extension of Scheduled COD as per Article 4.4.1 & 4.4.2 of this Agreement

Quoted Transmission Charges: **Rs. 140 Million**

Completion Schedule:

Element No.	Completion Schedule in Months	Scheduled CoD of the Element	Actual CoD of the Element	% Charges recoverable on Scheduled CoD of the Element
Element 1	20	1-Feb-2018	1-Jul-2018	25%
Element 2	28	1-Oct-2018	1-Dec-2018	75%

Tariff Payable as follows:

Transmission Charges for Element 1			**Transmission Charges for Element 2**		
1-Feb-18 to 31-Mar-18	--	0.00		--	0.00
1-Apr-18 to 30-Jun-18	--	0.00		--	0.00
1-Jul-18 to 30-Nov-18	140 X 25% X (153/365)	14.67		--	0.00
1-Dec-18 to 31-Mar-19	140 X 100% X (121/365)				46.41
2	140 X 100% X 1				140
3	140 X 100% X 1				140
4	140 X 100% X 1				140
5	140 X 100% X 1				140
.....					
.....					
36 (1-Apr to 30-Nov)	140 X 100% X (244/365)				93.59

Illustration-3: In case of delay in achieving COD of Project & all individual Elements (COD of the Project achieved in Contract Year 1)

Quoted Transmission Charges: **Rs. 140 Million**

Completion Schedule:

Element No.	Completion Schedule in Months	Scheduled CoD of the Element	Actual CoD of the Element	% Charges recoverable on Scheduled CoD of the Element
Element 1	20	1-Feb-2018	1-Dec-2018	25%
Element 2	28	1-Oct-2018	1-Dec-2018	75%

Tariff Payable as follows:

Transmission Charges for Element 1			Transmission Charges for Element 2		
1-Feb-18 to 31-Mar-18	--	0.00		--	0.00
1-Apr-18 to 30-Sept-18	--	0.00		--	0.00
1-Oct-18 to 30-Nov-18	--	0.00	1-Oct-18 to 30-Nov-18	--	0.00
1-Dec-18 to 31-Mar-19	140 X 100% X (121/365)				46.41
2	140 X 100% X 1				140
3	140 X 100% X 1				140
4	140 X 100% X 1				140
5	140 X 100% X 1				140
.....					
.....					
36 (1-Apr to 30-Nov)	140 X 100% X (244/365)				93.59

<u>Illustration-4: In case of delay in achieving COD of Project & all individual Elements (COD of the Project achieved in Contract Year other than Contact Year 1)</u>

Quoted Transmission Charges: **Rs. 140 Million**

Completion Schedule:

Element No.	Completion Schedule in Months	Scheduled CoD of the Element	Actual CoD of the Element	% Charges recoverable on Scheduled CoD of the Element
Element 1	38	1-Oct-2019	1-May-2020	25%
Element 2	38	1-Oct-2019	1-May-2020	75%

Tariff Payment to be paid as:

Transmission Charges for Element 1			Transmission Charges for Element 2		
1-Oct-19 to 31-Mar-20	--	0.00	1-Oct-19 to 31-Mar-20	--	0.00
1-Apr-20 to 30-Apr-20	-	0.00	1-Apr-20 to 30-Apr-20	-	0.00
1-May-20 to 31-Mar-21	140 X 100% X (335/365)				128.49
2	140 X 100% X 1				140
3	140 X 100% X 1				140
4	140 X 100% X 1				140
5	140 X 100% X 1				140
.....					
.....					
36 (1-Apr to 30-Apr)	140 X 100% X (30/ 365)				11.51

<u>Illustration5: In case of delay in achieving COD of Element but Project COD achieved on time</u>

Quoted Transmission Charges: **Rs. 140 Million**

Completion Schedule:

Element No.	Completion Schedule in Months	Scheduled CoD of the Element	Actual CoD of the Element	% Charges recoverable on Scheduled CoD of the Element
Element 1	20	1-Feb-2018	1-Jul-2018	25%
Element 2	30	1-Dec-2018	1-Dec-2018	75%

Tariff Payable as follows:

Transmission Charges for Element 1			Transmission Charges for Element 2		
1-Feb-18 to 31-Mar-18	--	0.00		--	0.00
1-Apr-18 to 30-Jun-18	--	0.00		--	0.00
1-Jul-18 to 30-Nov-18	140 X 25% X (153/365)	14.67		--	0.00
1-Dec-18 to 31-Mar-19	140 X 100% X (121/365)				46.41
2	140 X 100% X 1				140
3	140 X 100% X 1				140
4	140 X 100% X 1				140
5	140 X 100% X 1				140
.....					
.....					
36 (1-Apr to 30-Nov)	140 X 100% X (244/365)				93.59

Illustration-6: In case of early commissioning of Project

Quoted Transmission Charges: **Rs. 140 Million**

Completion Schedule:

Element No.	Completion Schedule in Months	Scheduled CoD of the Element	Actual CoD of the Element	% Charges recoverable on Scheduled CoD of the Element
Element 1	38	1-Oct-2019	1-Jul-2019	25%
Element 2	38	1-Oct-2019	1-Jul-2019	75%

Tariff Payment to be paid as:

Transmission Charges for Element 1		Transmission Charges for Element 2
1-July-19 to 31-Mar-20	140 X 100% X (274/365)	105.09
2	140 X 100% X 1	140
3	140 X 100% X 1	140
4	140 X 100% X 1	140
5	140 X 100% X 1	140
.....		

....		
.....		
36 (1-Apr to 30-Jun)	140 X 100% X (91/365)	34.91

Illustration-7: In case of early commissioning of an element

Quoted Transmission Charges: **Rs. 140 Million**
Completion Schedule:

Element No.	Completion Schedule in Months	Scheduled CoD of the Element	Actual CoD of the Element	% Charges recoverable on Scheduled CoD of the Element
Element 1	38	1-Oct-2019	1-Apr-2019	25%
Element 2	38	1-Jul-2019	1-Jul-2019	75%

Tariff Payment to be paid as:

Transmission Charges for Element 1			Transmission Charges for Element 2		
1-Apr-2019 to 30-Jun-19	140 X 25% X (91/365)	8.72	1-Apr-2019 to 30-Jun-19	--	0.00
1-July-19 to 31-Mar-20	140 X 100% X (274/ 365)				105.09
2	140 X 100% X 1				140
3	140 X 100% X 1				140
4	140 X 100% X 1				140
5	140 X 100% X 1				140
.....					
.....					
36 (1-Apr-30-Jun)	140 X 100% X (91/365)				34.91

The Transmission Charges shall be payable on monthly basis as computed above.

1.2 Computation of Monthly Transmission Charges

The Monthly Transmission Charges for any month m in a Contract Year n shall be calculated as below:

For AC System:

a. If Actual Transmission System Availability for the month m of contract year n

is greater than or equal to 98% and less than or equal to 98.5%;

Monthly Transmission Charges MTC(m) = Tmn *1

b. If Actual Transmission System Availability for the month m of contract year n exceeds 98.5% and less than or equal to 99.75%;

Monthly Transmission Charges MTC(m) = Tmn * (AA/ 98.5%)

c. If Actual Transmission System Availability for the month m of contract year n is greater than 99.75%;

Monthly Transmission Charges MTC(m) = Tmn * (99.75% / 98.5%)

d. If Actual Transmission System Availability for the month m of contract year n is less than 98% and greater than or equal to 95.00%;

Monthly Transmission Charges MTC(m) = Tmn * (AA/ 98%)

e. If Actual Transmission System Availability for the month m of contract year falls below 95%;

Monthly Transmission Charges MTC(m) = Tmn * (AA/ 98%) - 0.02 * (Tmn * (AA/ 95%)

For DC System:

a. If Actual Transmission System Availability for the month m of contract year n is greater than or equal to 95% and less than or equal to 96%;

Monthly Transmission Charges MTC(m) = Tmn *1

b. If Actual Transmission System Availability for the month m of contract year n exceeds 96% and less than or equal to 99.75%;

Monthly Transmission Charges MTC(m) = Tmn * (AA/ 96%)

c. If Actual Transmission System Availability for the month m of contract year n is greater than 99.75%;

Monthly Transmission Charges MTC(m) = Tmn * (99.75% / 96%)

d. If Actual Transmission System Availability for the month m of contract year n is less than 95% and greater than or equal to 92.00%;

Monthly Transmission Charges MTC(m) = Tmn * (AA/ 95%)

e. If Actual Transmission System Availability for the month m of contract year falls below 92%;

Monthly Transmission Charges MTC(m) = Tmn * (AA/ 95%) - 0.02 * (Tmn * (AA/ 92%)

where:

- AA is the actual Availability, as certified by RPC, as per procedure provided in Schedule 6.

- m is the month in Contract Year 'n'
- Tmn= Transmission Charges for the month 'm' in Contract Year 'n' = (=Transmission Charge/ no. of days in the Year n)* no. of days in month m.

Provided, no Transmission Charges shall be paid during the period for which the RLDC has not allowed the operation of the Element/Project due to the failure of the TSP to operate it as per the provisions of the Grid Code.

1.3 RLDC Fee & Charges

The payment of RLDC fee & charges, in accordance with relevant regulations of CERC, shall be the responsibility of the TSP.

Schedule: 5

Quoted Transmission Charges

[Quoted Transmission Charges from Annexure - 21 of the RFP of the Selected Bidder to be inserted here]

[To be incorporated from the Bid of the Selected Bidder submitted during the e-reverse auction after its selection]

Quoted Transmission Charges: Rs. 6086.70 Million per annum

Proportionate Transmission Charges payable for each Element of the Project:

Sl. No.	Name of the Transmission Element	% of Quoted Transmission Charges recoverable on Scheduled COD of the Element of the Project	Element(s) which are pre-required for declaring the commercial operation (COD) of the respective Element
1.	Establishment of 765/400 kV, 3x1500 MVA & 400/220 kV, 3x500 MVA Nasik S/s (towards South of Nasik) with 2x330 MVAr 765 kV bus reactor and 2x125 MVAr 400 kV bus reactor.	100%	All the elements are required simultaneously to ensure their utilization
2.	South Olpad (GIS) – Nasik 765 kV D/C line		
3.	2 Nos. 765 kV line bays at South Olpad (GIS) S/s (Sec-II) for South Olpad – Nasik 765 kV D/C line.		
4.	765 kV, 240 MVAr Switchable line reactors on each circuit at both ends of South Olpad – Nasik 765 kV D/C line.		

Sl. No.	Name of the Transmission Element	% of Quoted Transmission Charges recoverable on Scheduled COD of the Element of the Project	Element(s) which are pre-required for declaring the commercial operation (COD) of the respective Element
5.	Nasik – Pimpalgaon (MSETCL) 400 kV D/C line (Quad ACSR/AAAC/AL59 moose equivalent)		
6.	2 Nos. 400 kV line bays at Pimpalgaon (GIS) S/s for Nasik – Pimpalgaon (MSETCL) 400 kV D/C line (Quad ACSR/AAAC/AL59 moose equivalent)		

Note: *Effective date as per TSA of present scheme shall be matched with the Effective date of "Common Transmission System for evacuation of power from Lakadia (Phase-II: 7.5 GW), Jam Khambhaliya (Phase-II: 5.5 GW) and Jamnagar (Phase-I: 1 GW)" Parts A & C. and "Transmission System for Integration of Power from RE Projects in Lakadia REZ in Gujarat-Phase II (7500 MW)".*

Schedule: 6

Appendix IV of the Central Electricity Regulatory Commission (Terms and Conditions of Tariff) Regulations 2024

Procedure for Calculation of Transmission System Availability Factor for a Month

1. Transmission system availability factor for nth calendar month ("TAFPn") shall be calculated by the respective transmission licensee, verified by the concerned Regional Load Dispatch Centre (RLDC) and certified by the Member-Secretary, Regional Power Committee of the region concerned, separately for each AC and HVDC transmission system and grouped according to sharing of transmission charges. In the case of the AC system, transmission System Availability shall be calculated separately for each Regional Transmission System and inter-regional transmission system. In the case of the HVDC system, transmission System Availability shall be calculated on a consolidated basis for all inter-state HVDC systems.

2. Transmission system availability factor for nth calendar month ("TAFPn") shall be calculated by considering the following:

   i) **AC transmission lines**: Each circuit of AC transmission line shall be considered as one element;

   ii) **Inter-Connecting Transformers (ICTs):** Each ICT bank (three single-phase transformers together) shall form one element;

   iii) **Static VAR Compensator (SVC):** SVC, along with SVC transformer, shall form one element;

   iv) **Bus Reactors or Switchable line reactors:** Each Bus Reactors or Switchable line reactors shall be considered as one element;

   v) **HVDC Bi-pole links:** Each pole of the HVDC link, along with associated equipment at both ends, shall be considered as one element;

   vi) **HVDC back-to-back station:** Each block of the HVDC back-to-back station shall be considered as one element. If the associated AC line (necessary for the transfer of inter-regional power through the HVDC back-to-back station) is not available, the HVDC back-to-back station block shall also be considered unavailable;

   vii) **Static Synchronous Compensation ("STATCOM"):** Each STATCOM shall be considered as a separate element.

3. The Availability of the AC and HVDC portion of the Transmission system shall be calculated by considering each category of transmission elements as under:

TAFPn (in %) for AC system:

$$= \frac{(o \times AVo)+(p \times AVp) + (q \times AVq) + (r \times AVr)+(u \times AVu)}{(o + p + q + r+u)} \times 100$$

Where,

o	=	Total number of AC lines.
AVo	=	Availability of o number of AC lines
p	=	Total number of bus reactors/switchable line reactors
AVp	=	Availability of p number of bus reactors/switchable line reactors
q1	=	Total number of ICTs
AVq	=	Availability of q number of ICTs
r	=	Total number of SVCs
AVr	=	Availability of r number of SVCs
u	=	Total number of STATCOM
AVu	=	Availability of u number of STATCOM

TAFMn (in %) for HVDC System:

$$= \frac{\sum_{x=1}^{s} Cxbp\ (act) \times AVxbp + \sum_{y=1}^{t} Cy\ (act)btb \times AVybtb}{\sum_{x=1}^{s} Cxbp + \sum_{y=1}^{t} Cy\ btb} \times 100$$

Where

Cxbp(act)	=	Total actual operated capacity of xth HVDC pole
Cxbp	=	Total rated capacity of xth HVDC pole
AVxbp	=	Availability of xth HVDC pole
Cybtb(act)	=	Total actual operated capacity of yth HVDC back-to-back station block
Cybtb	=	Total rated capacity of yth HVDC back-to-back station block
AVybtb	=	Availability of yth HVDC back-to-back station block
s	=	Total no of HVDC poles
t	=	Total no of HVDC Back to Back blocks

CENTRAL TRANSMISSION UTILITY OF INDIA LTD. सीटीयू CTU

Jam Khambhaliya Jamnagar Power Transmission Ltd. New Delhi 110003 Core-4, Scope Complex, Lodhi Road

4. The availability for each category of transmission elements shall be calculated based on the weightage factor, total hours under consideration and non-available hours for each element of that category. The formulae for calculation of the Availability of each category of the transmission elements are as per **Appendix-V**. The weightage factor for each category of transmission elements shall be considered as under:

   (a) For each circuit of the AC line — The number of sub-conductors in the line multiplied by ckt-km;

   (b) For each HVDC pole- The rated MW capacity x ckt-km;

   (c) For each ICT bank – The rated MVA capacity;

   (d) For SVC- The rated MVAR capacity (inductive and capacitive);

   (e) For Bus Reactor/switchable line reactors — The rated MVAR capacity;

   (f) For HVDC back-to-back stations connecting two Regional grids- Rated MW capacity of each block; and

   (g) For STATCOM – Total rated MVAR Capacity.

5. The transmission elements under outage due to the following reasons shall be deemed to be available:

   i. Shut down availed for maintenance of another transmission scheme or construction of new element or renovation/upgradation/additional capitalization in an existing system approved by the Commission. If the other transmission scheme belongs to the transmission licensee, the Member Secretary, RPC may restrict the deemed availability period to that considered reasonable by him for the work involved. In case of a dispute regarding deemed availability, the matter may be referred to the Chairperson, CEA, within 30 days.

   ii. Switching off of a transmission line to restrict over-voltage and manual tripping of switched reactors as per the directions of the concerned RLDC.

   iii. Shut down of a transmission line due to the Project(s) of NHAI, Railways and Border Road Organization, including for shifting or modification of such transmission line or any other infrastructure project approved by Ministry of Power. Member Secretary, RPC may restrict the deemed availability period to that considered reasonable by him for the work involved; Provided that apart from the deemed availability, any

CENTRAL TRANSMISSION UTILITY OF INDIA LTD. सीटीयू

Jam Khambhaliya Jamnagar Power Transmission Ltd. New Delhi 110003

other costs involved in the process of such shutdown of transmission line shall not be borne by the DICs.

Provided that such deemed availability shall be considered only for the period for which DICs are not affected by the shutdown of such transmission line.

6. For the following contingencies, the outage period of transmission elements, as certified by the Member Secretary, RPC, shall be excluded from the total time of the element under the period of consideration for the following contingencies:

   i) Outage of elements due to force majeure events beyond the control of the transmission licensee. However, whether the same outage is due to force majeure (not design failure) will be verified by the Member Secretary, RPC. A reasonable restoration time for the element shall be considered by the Member Secretary, RPC, and any additional time taken by the transmission licensee for restoration of the element beyond the reasonable time shall be treated as outage time attributable to the transmission licensee. Member Secretary, RPC may consult the transmission licensee or any expert for estimation of reasonable restoration time. Circuits restored through ERS (Emergency Restoration System) shall be considered as available;

   ii) Outage caused by grid incident/disturbance not attributable to the transmission licensee, e.g. faults in a substation or bays owned by another agency causing an outage of the transmission licensee's elements, and tripping of lines, ICTs, HVDC, etc., due to grid disturbance. However, if the element is not restored on receipt of direction from RLDC while normalizing the system following grid incident/disturbance within reasonable time, the element will be considered not available for the period of outage after issuance of RLDC's direction for restoration;

   iii) The outage period which can be excluded for the purpose of sub-clause (i) and (ii) of this clause shall be declared as under:

   a. Maximum up to one month by the Member Secretary, RPC;

   b. Beyond one month and up to three months after the decision at RPC;

   c. Beyond three months by the Commission for which the transmission license shall approach the Commission along with reasons and steps taken to mitigate the outage and restoration timeline.

CENTRAL TRANSMISSION UTILITY OF INDIA LTD. सीटीयू

Jam Khambhaliya Jamnagar Power Transmission Ltd. New Delhi 110003

7. Time frame for certification of transmission system availability: (1) The following schedule shall be followed for certification of availability by the Member Secretary of the concerned RPC:
   - Submission of outage data along with documentary proof (if any) and TAFPn calculation by Transmission Licensees to RLDC/ constituents

     – By the 5th of the following month;
   - Review of the outage data by RLDC / constituents and forward the same to respective RPC — by 20th of the month;
   - Issue of availability certificate by respective RPC — by the 3rd of the next month.

Appendix-V

FORMULAE FOR CALCULATION OF AVAILABILITY OF EACH CATEGORY OF TRANSMISSION ELEMENTS

For AC transmission system

AVo(Availability of o no. of AC lines) $= \dfrac{\sum_{i=1}^{o} Wi(Ti - TNAi)/Ti}{\sum_{i=1}^{o} Wi}$

AVq(Availability of q no. of ICTs) $= \dfrac{\sum_{k=1}^{q} Wk(Tk - TNAk)/Tk}{\sum_{k=1}^{q} Wk}$

AVr(Availability of r no. of SVCs) $= \dfrac{\sum_{i=1}^{r=1} Wi(Ti - TNAi)/Ti}{\sum_{i=1}^{r} Wi}$

AVp(Availability of p no. of Switched Bus reactors) $= \dfrac{\sum_{m=1}^{p} Wm(Tm - TNAm)/Tm}{\sum_{m=1}^{p} Wm}$

AVu(Availability of u no. of STATCOMs) $= \dfrac{\sum_{n=1}^{u} Wn(Tn - TNAn)/Tn}{\sum_{n=1}^{u} Wn}$

AV_{nbp}(Availability of an individual HVDC pole) $= \dfrac{(Tx - TN)}{Tx}$

AV_{ybb} (Availability of an individual HVDC Back-to-back Blocks) $= \dfrac{(Ty - TNAy)}{Ty}$

CENTRAL TRANSMISSION UTILITY OF INDIA LTD. सीटीयू CTU

Jam Khambhaliya Jamnagar Power Transmission Ltd. New Delhi 110003

For the HVDC transmission system

For the new HVDC commissioned but not completed twelve months;

For first 12 months: [(AV_{xbp} or AV_{ybtb})x95%/85%], subject to a ceiling of 95%.

Where,

o	=	Total number of AC lines;
AVo	=	Availability of o number of AC lines;
p	=	Total number of bus reactors/switchable line reactors;
AVp	=	Availability of p number of bus reactors/switchable line reactors;
q	=	Total number of ICTs;
AVq	=	Availability of q number of ICTs;
r	=	Total number of SVCs;
AVr	=	Availability of r number of SVCs;.
U	=	Total number of STATCOM;
AVu	=	Availability of u number of STATCOMs;
W*i*	=	Weightage factor for *i*th transmission line;
W*k*	=	Weightage factor for *k*th ICT;
W*l*	=	Weightage factors for inductive & capacitive operation of *l*th SVC;
Wm	=	Weightage factor for mth bus reactor;
Wn	=	Weightage factor for nth STATCOM
T_i, T_k, T_l,		The total hours of ith AC line, k^{th} ICT, l^{th} SVC, m^{th} Switched Bus Reactor
T_m, T_n, T_x, T_y		& n^{th} STATCOM, x^{th} HVDC pole, y^{th} HVDC back-to-back blocks during the period under consideration (excluding time period for outages not attributed to transmission licensee for the reasons given in Para 5 of the procedure)
T_{NAi}, T_{NAk}		The non-availability hours (excluding the time period for outages not T_{NAl}, T_{NAm}, attributable to transmission licensee taken as deemed availability as T_{NAn}, T_{NAn}, T_{NAx}, T_{NAy} per Para 5 of the procedure) for i^{th} AC line, k^{th} ICT, l^{th} SVC, m^{th} Switched Bus Reactor, n^{th} STATCOM, x^{th} HVDC pole and y^{th} HVDC back-to-back block.

Schedule: 7

Entire Bid (both financial bid and technical bid) of the Selected Bidder to be attached here

Bid dated 05.08.2026 and 25.08.2026 shall be an integral part of this Agreement.

Schedule: 8

Contract Performance Guarantee

(To be on non-judicial stamp paper of appropriate value as per Stamp Act relevant to place of execution. Foreign entities submitting Bids are required to follow the applicable law in their country.)

In consideration of the ..... [Insert name of the SPV or Selected Bidder on behalf of the TSP, or Lead Member in case of the Consortium, with address] agreeing to undertake the obligations under the Transmission Service Agreement dated and the other RFP Project Documents and the Nodal Agency and the ..... [Insert the name of the BPC], agreeing to execute the *RFP Project Documents* with the Selected Bidder, regarding setting up the Project, the..... [Insert name and address of the bank issuing the guarantee and address of the head office] (hereinafter referred to as "Guarantor Bank") hereby agrees unequivocally, irrevocably and unconditionally to pay to ..... (being the Nodal Agency) at ..... [Insert the Place from the address of the Nodal Agency indicated in the TSA] forthwith on demand in writing from the Nodal Agency or any Officer authorized by it in this behalf, any amount up to and not exceeding Rupees ..... Crores (Rs. .....) only [Insert the amount of the bank guarantee] on behalf of M/s .....[Insert name of the Selected Bidder or SPV].

This guarantee shall be valid and binding on the Guarantor Bank up to and including .....and shall not be terminable by notice or any change in the constitution of the Bank or the term of the Transmission Service Agreement or by any other reasons whatsoever and our liability hereunder shall not be impaired or discharged by any extension of time or variations or alternations made, given, or agreed with or without our knowledge or consent, by or between parties to the respective agreement.

Our liability under this Guarantee is restricted to Rs .....Crores (Rs .....) only. Our Guarantee shall remain in force until ... .[Insert the date of validity of the Guarantee

as per Article 3.1.2 of this Agreement]. The Nodal Agency, shall be entitled to invoke this Guarantee up to three hundred sixty five (365) days of the last date of the validity of this Guarantee.

The Guarantor Bank hereby expressly agrees that it shall not require any proof in addition to the written demand from ..... (in its roles as the Nodal Agency), made in any format, raised at the above mentioned address of the Guarantor Bank, in order to make the said payment to Nodal Agency.

The Guarantor Bank shall make payment hereunder on first demand without restriction or conditions and notwithstanding any objection by ..... [Insert name of the Selected Bidder], ... [Insert name of the TSP] and / or any other person. The Guarantor Bank shall not require Nodal Agency to justify the invocation of this BANK GUARANTEE, nor shall the Guarantor Bank have any recourse against Nodal Agency in respect of any payment made hereunder.

THIS BANK GUARANTEE shall be interpreted in accordance with the laws of India.

The Guarantor Bank represents that this BANK GUARANTEE has been established in such form and with such content that it is fully enforceable in accordance with its terms as against the Guarantor Bank in the manner provided herein.

THIS BANK GUARANTEE shall not be affected in any manner by reason of merger, amalgamation, restructuring, liquidation, winding up, dissolution or any other change in the constitution of the Guarantor Bank.

THIS BANK GUARANTEE shall be a primary obligation of the Guarantor Bank and accordingly Nodal Agency shall not be obliged before enforcing this BANK GUARANTEE to take any action in any court or arbitral proceedings against ... . [Insert name of the SPV] or the Selected Bidder, as the case may be, to make any claim against or any demand on .....[Insert name of the SPV] or the Selected Bidder, as the case may be, or to give any notice to .....[Insert name of the SPV] or the Selected Bidder, as the case may be, or to enforce any security held by the Nodal Agency or to exercise, levy or enforce any distress, diligence or other process against ... . [Insert name of the SPV] or the Selected Bidder, as the case may be.

CENTRAL TRANSMISSION UTILITY OF INDIA LTD. सीटीयू

Jam Khambhaliya Jamnagar Power Transmission Ltd. Core-4, Scope Complex, Lodhi Road New Delhi 110003

The Guarantor Bank acknowledges that this BANK GUARANTEE is not personal to Nodal Agency and may be assigned, in whole or in part, (whether absolutely or by way of security) by Nodal Agency to any entity to whom the Nodal Agency is entitled to assign its rights and obligations under the Transmission Service Agreement.

The Guarantor Bank hereby agrees and acknowledges that Nodal Agency shall have a right to invoke this Bank Guarantee either in part or in full, as it may deem fit.

Notwithstanding anything contained hereinabove, our liability under this Guarantee is restricted to Rs. ..... Crores (Rs.....) only and it shall remain in force until .....[Date to be inserted on the basis of Article 3.1.2of the Transmission Service Agreement], with an additional claim period of three hundred sixty five (365) days thereafter. This BANK GUARANTEE shall be extended from time to time for such period, as may be desired by ..... [Insert name of the Selected Bidder or Lead Member in case of the Consortium or SPV]. We are liable to pay the guaranteed amount or any part thereof under this Bank Guarantee only if Nodal Agency serves upon us a written claim or demand.

In witness where of:

Signature .....

Name: .....

Power of attorney No.: .....

For:

. . . . [Insert Name of the Bank]

Banker's Seal and Full Address, including mailing address of the Head Office

Jam Khambhaliya Jamnagar Power Transmission Ltd * Core-4, Scope Complex, Lodhi Road * New Delhi 110003

SCHEDULE: 8A

(ISB for CPG)

FORMAT FOR SURETY INSURANCE CONTRACT

(To be on non-judicial stamp paper of appropriate value as per Stamp Act relevant to place of execution.

Foreign entities submitting Bids are required to follow the applicable law of India)

In consideration of the ..... [Insert name of the SPV or Selected Bidder on behalf of SPV or Lead Member in case of the Consortium, with address] (hereinafter referred to as the **'Principal Debtor'** for the purposes of this Surety Insurance Contract as provided in Section 126 of the Indian Contract Act, 1872) having been selected to undertake the Transmission Project on the terms and conditions contained in the Transmission Service Agreement dated..... / to be
executed as per the Model Transmission Service Agreement provided along with the Request for Proposal **('RFP')** and other RFP Project Documents, subject to the condition of providing a Performance Bank Guarantee or a Surety Insurance Contract guaranteeing/insuring the due performance of the obligations under the Transmission Service Agreement, to the Central Transmission Utility of India Limited **('CTUIL')** [herein after referred to as the Nodal Agency], the [Insert name and address of the Insurance Company issuing the Surety Insurance Contract and address of the head office] (hereinafter referred to as **"Surety")** hereby agrees unequivocally, irrevocably, absolutely and unconditionally, without demur, to pay to the Nodal Agency at [Insert Place and Address of the Nodal Agency indicated in Transmission Service Agreement, or to the designated Bank Account of the Nodal Agency, namely.....] forthwith on demand in writing from the Nodal Agency, or any Officer authorized by it in this behalf, intimated to the Surety at the address mentioned above, any amount as may be decided by the Nodal Agency not exceeding Rupees .....Cr
ores
(Rs.....) only [Insert the amount of the Surety Insurance Contract]

The Surety hereby acknowledges, accepts and confirms that the Surety has received from the Principal Debtor, by way of premium the entire consideration for the Surety to execute, in favour of the Nodal Agency, this Surety Insurance Contract, as extended by the Surety from time to time and assuming the obligation to pay to the Nodal Agency the amount in terms hereof, without any requirement for payment of any other consideration to the Surety by the Principal Debtor, or otherwise.

This Surety Insurance Contract shall be valid and binding on the Surety, as the principal obligation of the Surety to pay on demand by the Nodal Agency, and shall not be terminable by notice or any change in the constitution of the Surety or the term of the Transmission Service Agreement or by any other reasons whatsoever and the liability hereunder of the Surety shall not be impaired or discharged by any extension of time or variations or alternations made, given, or agreed (with or without the knowledge or consent of the Surety) by or between the Principal Debtor

and the Nodal Agency.

The liability of the Surety under this Surety Insurance Contract is restricted to Rupees ..... Crores (Rs.....) only. The Surety Insurance Contract shall remain in force until [Insert the date of validity of the Surety Insurance Contract]. The Nodal Agency shall be entitled to invoke this Surety Insurance Contract up to three hundred sixty five (365) days after the last date of the validity of this Surety Insurance Contract.

The Surety hereby expressly agrees that it shall not require any proof except for the written demand from the Nodal Agency, containing the statement that the contractor has failed to meet its contractual obligations raised at the above mentioned address of the Surety (address of Surety office should be a place in NCR only) and the Surety shall pay the amount without reference to the Principal Debtor.

Any such demand made by the Nodal Agency on the Surety shall be conclusive and binding not withstanding any difference between the Nodal Agency and the Principal Debtor or any dispute pending before any Court, Tribunal, Arbitrator or any other authority. The Surety undertakes not to revoke this guarantee during its currency without previous consent of the Nodal Agency and further agrees that the Surety Insurance Contract herein contained shall continue to be enforceable till the Nodal Agency discharges this contract or till the expiry of tenor(including Claim period) whichever is earlier.

The Surety shall make payment hereunder within two (02) working days on first demand without restriction or conditions and notwithstanding any objection by the Principal Debtor, namely, ... [Insert name of SPV], or ..... [Insert name of the Selected Bidder], or .....[Insert name of the TSP] and/or any other person. The
Surety shall not require the Nodal Agency to justify the invocation of this Surety Insurance Contract, nor shall the Surety have any recourse against the Nodal Agency in respect of any payment made hereunder.

This SURETY INSURANCE CONTRACT shall be interpreted in accordance with the laws of India.

This SURETY INSURANCE CONTRACT is being executed by the Surety in terms of the IRDAI (Surety Insurance Contract) Guidelines, 2022 and the Surety hereby acknowledges, accepts and confirms that this Surety Insurance Contract shall be a Contract of Guarantee as provided under Section 126 of the Indian Contract Act, 1872 and further shall be covered by Section 14(3)(b) of the Insolvency and Bankruptcy Code, 2016 (as amended) shall be enforceable as such.

The Surety represents that this Surety Insurance Contract has been established in such form and with such content that it is fully enforceable in accordance with its terms as against the Surety in the manner provided herein.

This SURETY INSURANCE CONTRACT shall not be affected in any manner by reason of merger, amalgamation, restructuring, liquidation, winding up, dissolution or any other change in the constitution of the Surety.

In order to give effect to this surety Bond, the Nodal Agency shall be entitled to act as if the surety insurer were the principal debtor and any change in the constitution of the contractor and/or the surety insurer, whether by their absorption with any

other body or corporation or otherwise, shall not in any way or manner affect the liability or obligation of the surety insurer under this surety Bond.

This SURETY INSURANCE CONTRACT shall be a primary obligation of the Surety as a Principal to pay on demand by the Nodal Agency and the Nodal Agency shall not be obliged before enforcing this Surety Insurance Contract to take any action in any court or arbitral proceedings against the Principal Debtor, namely,

..... [Insert name of SPV], or ..... [Insert name of the Selected Bidder], or ..... [Insert name of the TSP] and/or any other person, as the case may be, to make any claim against or any demand on the Principal Debtor, namely, ... [Insert name of SPV], or

..... [Insert name of the Selected Bidder], or..... [Insert name of the TSP] and/or any other person, as the case may be, or to give any notice to Principal Debtor, namely..... [Insert name of SPV], or

..... [Insert name of the Selected Bidder], or..... [Insert name of the TSP] and/or any other person, as the case may be, or to enforce any security held by the Nodal Agency or to exercise, levy or enforce any distress, diligence or other process against the Principal Debtor, namely, ...

[Insert name of SPV], or ..... [Insert name of the Selected Bidder], or .....[Insert name of the TSP] and/or any other person, as the case may be.

The Surety acknowledges that this Surety Insurance Contract is not personal to the Nodal Agency and may be assigned, in whole or in part, (whether absolutely or by way of security) by Nodal Agency to any entity to whom the Nodal Agency is entitled to assign its rights and obligations under the Transmission Service Agreement Provided that any such assignment shall be in compliance with the relevant provisions of the Insurance Act 1938

The Surety hereby agrees and acknowledges that the Nodal Agency shall have a right to invoke this Surety Insurance Contract either in part or in full, as it may deem fit. In case of invocation of this Surety Insurance Contract in part, besides making payment for the part of Surety Insurance Contract invoked, surety at the request of nodal agency shall amend the value of Surety Insurance Contract to the extent of balance amount.

The Surety undertakes not to revoke this Surety Contract during its currency, except with the previous express consent of the Nodal Agency in writing and declares and warrants that it has the power to issue this Surety Contract and the undersigned has full powers to do so on behalf of the Surety

In witness where of:

Signature.....
Name: .....

Power of attorney No/ Employee No. as applicable. .....

For:

.....[Insert Name of the Surety-Insurance Company]
Banker's Seal and Full Address, including mailing address of the Head Office

Notes:

1. The Stamp Paper should be in the name of the Executing Insurance Company.

SCHEDULE: 8B

(POI for CPG)

Format for Issuance of Payment on Order Instrument

Dear Sir,

1. Indian Renewable Energy Development Agency Limited ('IREDA")/PFC/REC has sanctioned a non-fund-based limit loan of Rs. (Rupees..... Only) to M/s. ..... [Insert name of SPV or selected Bidder] under the Loan Agreement executed on.....to execute Transmission System Projects.

2. In consideration of the .....[Insert name of the SPV or Selected Bidder on behalf of SPV or Lead Member in case of the Consortium, with address] for the purposes of this Payment on Order Instrument ("POI") having been selected to undertake the Transmission Project on the terms and conditions contained in the Transmission Service Agreement dated .... / to be executed as per the draft of the Model Transmission Service Agreement provided along with the Request for Proposal (,,RFP") and other RFP Project Documents, subject to the condition of providing a POI guaranteeing the due performance of the obligations under the Transmission Service Agreement to the Nodal Agency/Central Transmission Utility of India Limited (,,CTUIL"), the [Insert name and address of the non-banking financial institutions(IREDA/PFC/REC) issuing the POI and address of the head office] (hereinafter referred to as **"Guarantor")** hereby agrees unequivocally, irrevocably, absolutely and unconditionally, without demur, to pay to the Nodal Agency at ..... [Insert Place and Address of the Nodal Agency indicated in Transmission Service Agreement, or to the designated Bank Account of the Nodal Agency, namely .....] forthwith on demand in writing from the Nodal Agency, or any Officer authorized by it in this behalf, intimated to the Guarantor at the address mentioned above, any amount as may be decided by the Nodal Agency not exceeding Rupees ..... Crores (Rs.....) only
[Insert the amount of Payment on Order Instrument]

3. At the request of ..... and on behalf of M/s....., [Insert name of SPV or selected Bidder] this Payment on Order Instrument (POI) for an amount of Rs. ..... (Rupees.....) is being issued with IREDA/PFC/REC assuming the obligations to remit such amount to CTUIL from the sanctioned loan.

4. This Payment on Order Instrument comes into force immediately and IREDA/PFC/REC confirms that it has sufficient amount out of the sanctioned loan

CENTRAL TRANSMISSION UTILITY OF INDIA LTD. सीटीयू CTU

Jam Khambhaliya Jamnagar Power Transmission Ltd New Delhi 110003

and shall maintain the required amount to pay under this Payment on Order Instrument, during the validity and claim period of this Payment on Order Instrument.

5. This POI has been issued by IREDA/PFC/REC utilizing the credit limit of M/s.....[Insert name of SPV or selected Bidder] IREDA/PFC/REC confirms that its liability to pay under this Payment on Order Instrument shall be primary and independent of whether at the time of invocation of Payment on Order Instrument, the sanctioned funds are available or not and notwithstanding, the status of M/s [Insert name of SPV or selected Bidder] at the relevant time and to whether IREDA/PFC/REC is able to recover the amount advanced by it to the said developer

6. IREDA/PFC/REC and M/s.[Insert name of SPV or selected Bidder] hereby acknowledges, accepts and confirms that this Payment on Order Instrument shall be a Contract of Guarantee as provided under Section 126 of the Indian Contract Act, 1872 and further shall be covered by Section 14(3)(b) of the Insolvency and Bankruptcy Code, 2016 (as amended) shall be enforceable as such.

7. IREDA/PFC/REC liability under this POI is restricted to Rupees Crores (Rs.....) only. This POI shall remain in force until..... [Insert the date of validity of the POI]. The Nodal Agency shall be entitled to invoke this POI up to three hundred sixty-five (365) days after the last date of the validity of this POI. This POI shall be extended from time to time for such period, as may be desired by the TSP.

8. The Guarantor hereby expressly agrees that it shall not require any proof except for the written demand from the Nodal Agency, raised at the above mentioned address of the Guarantor (address of Guarantor office should be in NCR only) and the Guarantor shall pay the amount to the Nodal Agency without reference to the TSP.

9. Any such demand made by the Nodal Agency on the Guarantor shall be conclusive and binding not withstanding any difference between the Nodal Agency and the TSP or any dispute pending before any Court, Tribunal, Arbitrator or any other authority. The Guarantor undertakes not to revoke this guarantee during its currency without previous consent of the Nodal Agency and further agrees that the POI herein contained shall continue to be enforceable till the Nodal Agency discharges this contract or till the expiry of tenure or (including Claim period) whichever is earlier.

10. The Guarantor shall make payment hereunder within two (02) working days on first demand without restriction or conditions and notwithstanding any objection or disputes raised by the TSP, namely, ... [Insert name of SPV], or [Insert name of the Selected Bidder], or ..... [Insert name of the TSP] and/or

CENTRAL TRANSMISSION UTILITY OF INDIA LTD. सीटीयू

Jam Khambhaliya Jamnagar Power Transmission Ltd. New Delhi 110003 Core-4, Scope Complex, Lodhi Road

any other person. The Guarantor shall not require the Nodal Agency to justify the invocation of this POI, nor shall the Guarantor have any recourse against the Nodal Agency in respect of any payment made hereunder.

11. This POI shall be interpreted in accordance with the laws of India.

12. The Guarantor represents that this POI Contract has been established in such form and with such content that it is fully enforceable in accordance with its terms as against the Guarantor in the manner provided herein.

13. This POI shall not be affected in any manner by reason of merger, amalgamation, restructuring, liquidation, winding up, dissolution or any other change in the constitution of the Guarantor.

14. This POI Contract shall be a primary obligation of the Guarantor as a Principal to pay on demand by the Nodal Agency and the Nodal Agency shall not be obliged before enforcing this POI Contract to take any action in any court or arbitral proceedings against the TSP, namely, ... [Insert name of SPV], or..... [Insert name of the Selected Bidder], or...[Insert name of the TSP]
and/or any other person, as the case may be to make any claim against or any demand on the TSP, namely, ... [Insert name of SPV], or
..... [Insert name of the Selected Bidder], or .....
[Insert name of the TSP] and/or any other person, as the case may be, or to give any notice to TSP, namely..... [Insert name of SPV], or
..... [Insert name of the Selected Bidder], or .....
[Insert name of the TSP] and/or any other person, as the case may be, or to enforce any security held by the Nodal Agency or to exercise, levy or enforce any distress, diligence or other process against the TSP, namely,.....[Insert name of SPV],
or.[Insert name of the Selected Bidder], or.....[Insert name of the TSP] and/or any other person, as the case may be.

15. The Guarantor acknowledges that this POI Contract is not personal to the Nodal Agency and may be assigned, in whole or in part, (whether absolutely or by way of security) by Nodal Agency to any entity to whom the Nodal Agency is entitled to assign its rights and obligations under the Transmission Service Agreement.

16. The Guarantor hereby agrees and acknowledges that the Nodal Agency shall have a right to invoke this POI Contract either in part or in full, as it may deem fit. In case of invocation of this POI Contract in part, besides making payment for the part of POI Contract invoked, Guarantor at the request of Nodal Agency shall amend the value of POI Contract to the extent of balance amount.

CENTRAL TRANSMISSION UTILITY OF INDIA LTD. सीटीयू

Jam Khambhaliya Jamnagar Power Transmission Ltd. New Delhi 110003 Core-4, Scope Complex, Lodhi Road

IN WITNESS WHERE OF the non- banking financial institutions through its authorized officer, has set its hand and stamp on this..... day of.....at.....

Signature .....

Name:

.....

Power of attorney No.:

.....For:

..... [Insert Name of the non- banking financial institutions Company]

Seal and Full Address, including mailing address of the Head Office

CENTRAL TRANSMISSION UTILITY OF INDIA LTD. ★ सीटीयू

Jam Khambhaliya Jamnagar Power Transmission Ltd ★ Core-4, Scope Complex, Lodhi Road ★ New Delhi 110003

Schedule: 9

Methodology for determining the Relief Under Force Majeure Event & Change in Law during Construction Period

The relief in the form of revision in tariff due to Force Majeure Event leading to extension of Scheduled COD for a period beyond one hundred eighty (180) days and/ or Change in Law during the construction period shall be as under:

$\Delta T = [(P \times d)] \div [1-(1+ d)^{(-n)}]$

Where,

ΔT = Change in Transmission Charges for each year

P = Sum of cumulative increase or decrease in the cost of the Project due to Change in Law and interest cost during construction corresponding to the period exceeding one hundred eighty (180) due to Force Majeure Event leading to extension of Scheduled COD for a period beyond one hundred eighty (180) days

n = number of years over which the Transmission Charges has to be

paid d = Discount rate as notified by the CERC, applicable on the Bid

Deadline

The increase in Transmission Charges as stated above shall be applicable only if the value of increase in Transmission Charges as calculated above exceeds 0.30% (zero point three percent) of the 2quoted Transmission Charges of the TSP.

Heman t Singh Digitally signed by Hemant Singh Date: 2026.10.21 23:18:42 +05'30'

CENTRAL TRANSMISSION UTILITY OF INDIA LTD. सीटीयू

Jam Khambhaliya Jamnagar Power Transmission Ltd. Core-4, Scope Complex, Lodhi Road New Delhi 110003